Administrative Change Approval Form Order

East Port Water Reclamation Facility Expansion

Contract #:	2023000485	Change Order #:	5
Original Contract:	$106,188,600.00	Original Contingency:	$5,309,430.00
Previous Change Orders:	$316,884.91	Previous Contingency Changes:	$424,489.64
This Change:	$134,811.70	New Contingency Balance:	$4,750,128.66
Revised Contract Amount:	$106,640,296.61	Original Contract Time:	900 days
Current Completion Date:	12/30/2026	Previous Additional Time:	173 days

Items to be changed: Description & Justification

CCU is requesting approval for Change Order #5 due to necessary modifications that are critical for the successful operation of the approved design.

CO-5.1 Based on the expertise and preferences of the plant staff, this change accommodates washdown procedures, which are crucial for optimizing performance.

CO-5.2 Addresses the redundancy that CCU aims to achieve throughout the plant. It allows filters to be taken offline for maintenance while continuing to produce reclaimed water.

CO-5.3 Addresses the need to remove old and abandoned 20-inch ductile iron pipe found within the project footprint to allow for future growth.

CO-5.4 Addresses the need to remove old and abandoned 24-inch pipe found within the project footprint to allow for future growth.

CO-5.5 Addresses the need to remove old and abandoned miscellaneous pipe sizes ranging from 2 inches to 12 inches, found within the project footprint to allow for future growth.

CO-5.6 Addresses the need to core (2) 6" diameter holes and install passive vents with hoods per direction within PCM34.

CO-5.7 Addresses the need to relocate existing infrastructure to accommodate the placement of the chlorine contact chamber and filter, both of which are required for a fully functioning AWT system.

These changes are essential not just for compliance, but for delivering a high-quality, operationally sound project.

Contract Specialist:	True, Alisa	Phone:	941-743-1549	Fax:	941-743-1384

Change Order Total:	$134,811.70	**Total Additional Days:**	0 days

Fiscal Reviewed By:	Winship, Eric, Senior Financial Analyst-06/13/2025	
Vendor Information:	Michael Lauer Poole & Kent Contractors	See attached
		Signature/Date
Department Approved By:	Watson, Dave, Utilities Director - 6/13/2025	
Purchasing Approved By:	Corbett, Kimberly, Senior Division Mgr-Purchasing - 6/13/2025	
Administration Approved By:	Flores, Hector, County Administrator - 6/13/2025	

CCU Change Order Request
East Port WRF Expansion - Poole and Kent
Change Order #5

Date:	6/2/2025			
		Change Order No.	5	
Contract Number:	**2023000485**	Original Contingency:	$5,309,430.00	
Original Contract Price:	$106,188,600.00	Previous Contingency Changes:	$424,489.64	
Previous Change Orders:	$316,884.91	New Contingency Balance:	$4,750,128.66	
This Change:	**$134,811.70**	Original Contract Time:	900	Calendar Days
Revised Contract Amount:	**$106,640,296.61**	Additional Time:	0	Calendar Days
		Previous Changes:	173	Calendar Days
Contract Start Date:	1/22/2024	New Contract Time:	1073	Calendar Days
Current Completion Date:	12/15/2026			
New Completion Date:	**12/29/2026**			
Purchase Order Number:	**2024000830**			

Add/Deduct	Bid Item #	DESCRIPTION	UNIT	Qty.	Unit Price	Extended Price	Adds	Deducts
Add	CO- 5.1(NEW) PCO31	Install a trench drain on IR Pump Pad #3 to match the existing pads	LS	1	$3,101.11	$3,101.11	$3,101.11	$0.00
Add	CO- 5.2 (NEW) PCO33	Additional 36" Gate Valve for isolation purposes between Filters/CCC 1&2 and Filters/CCC 3&4	LS	1	$86,401.38	$86,401.38	$86,401.38	$0.00
Add	CO- 5.3 (NEW) PCO19/34	Removal of existing abandoned 20 inch Ductile Iron Pipe	LF	120	$35.12	$4,214.40	$4,214.40	$0.00
Add	CO- 5.4 (NEW) PCO 19/35	Removal of existing abandoned 24 inch pipes	LF	239	$52.68	$12,590.52	$12,590.52	$0.00
Add	CO- 5.5 (NEW) PCO 27/36	Removal of existing abandoned 2 inch - 12 inch pipes	LF	543	$27.02	$14,671.86	$14,671.86	$0.00
Add	CO-5.6 (NEW) PCO 40A	Core (2) 6" diameter holes and install passive vents with hoods	LS	1	$1,871.77	$1,871.77	$1,871.77	$0.00
Add	CO-5.7 (NEW) PCO41	Relocate conduit Duct Bank and PB that was in conflict with the newly proposed locations of the CCC and Filters 3 & 4	LS	1	$11,960.66	$11,960.66	$11,960.66	$0.00
						TOTAL Adds/Deducts	**$134,811.70**	**$0.00**
						TOTAL CHANGE ORDER 5		**$134,811.70**

Justification

CCU is requesting approval for Change Order #5 due to necessary modifications that are critical for the successful operation of the approved design.

CO-5.1 Based on the expertise and preferences of the plant staff, this change accommodates washdown procedures, which are crucial for optimizing performance.

CO-5.2 Addresses the redundancy that CCU aims to achieve throughout the plant. It allows filters to be taken offline for maintenance while continuing to produce reclaimed water.

CO-5.3 Addresses the need to remove old and abandoned 20-inch ductile iron pipe found within the project footprint to allow for future growth.

CO-5.4 Addresses the need to remove old and abandoned 24-inch pipe found within the project footprint to allow for future growth.

CO-5.5 Addresses the need to remove old and abandoned miscellaneous pipe sizes ranging from 2 inches to 12 inches, found within the project footprint to allow for future growth.
CO-5.6 Addresses the need to core (2) 6" diameter holes and install passive vents with hoods per direction within PCM34.
CO-5.7 Addresses the need to relocate existing infrastructure to accommodate the placement of the chlorine contact chamber and filter, both of which are required for a fully functioning AWT system.
These changes are essential not just for compliance, but for delivering a high-quality, operationally sound project.

Submitted by:	Gregg S. Fruecht, Jones Edmunds Engineering	Date
Approved by:	Hendrik Dolleman, Project Manager	Date 6/4/25
Approved by:	Rob Melton, Engineering Construction Mgr.	Date 6-6-25
Director:	Dave Watson, Director	Date

Poole & Kent
Contractors
An EMCOR Company

Poole & Kent Company of Florida
1781 N.W. North River Drive
Miami, FL 33125
P.O. Box 420556
Miami, FL 33242

Phone: 305.325.1930
Fax: 305.324.0522

March 17, 2025

APPROVED

To be included in Change Order No. 4 - Gregg Fruecht, 03.19.2025

Charlotte County Utilities
25550 Harbor View Rd
Port Charlotte, FL 33980

Attn: Hendrik Dolleman

Re: **Eastport WRF MGD Expansion Project**
Contract Number: 18-0006
Poole & Kent Project No. 24801

Subject: **PCO 31- Trench Drain Inclusion on IR Pump Pad**
P&K PCO No. 31

Dear Mr. Fruecht,

Poole & Kent prepared a cost estimate to include a trench drain on IR Pump Pad #3 to match the existing pads, direction was supplied to P&K from Jones Edmunds in PCM #24.We propose to incorporate the work, as clarified herein, for a lump sum increase to our contract in the amount of **$3,101.11** and (0) calendar days to the contract completion date.

This proposal includes the following clarifications.

1. This proposal is valid for a period of 21 days, after which it is void at the option of Poole & Kent.
2. Pricing is based on normal working hours and does not include any overtime.
3. Price includes only the work specifically described in our proposal and the attached subcontractor proposals. Any additional work required for this change will be quoted as it becomes known.
4. Should additional time be required for this change, we then reserve our right to a time extension and associated costs.
5. For more detailed information, please see the attached submittal and breakdown from Poole and Kent.

Please notify P&K as soon as possible if we are to proceed with the above changes. Should you have any questions, please do not hesitate to call.

Very truly yours,
POOLE & KENT COMPANY OF FLORIDA

Mike Lauer

Michael Lauer
Project Manager

Poole & Kent
Contractors
An EMCOR Company

Poole & Kent Company of Florida
1715 W Lemon St
Tampa, Fl 33606

Phone: 813-251-2438

Field Phone: 941-380-7138

Project Name **Eastport WRF MGD Expansion**
Owner: **Charlotte County Utilities**
Engineer **Jones Edmunds**
Prime Contractor **Poole & Kent Company of Florida**

Job No. 24801

Proposed Credit Order No. 31
March 17, 2025

Sheet No	Sheet Identification	Subcontractor	Labor	Material	Equipment
1	Include a 4" trench drain at IR Pump Pad	2,637.00	-		
			-	-	
			-		
				-	
		-			
	Material Cost, Labor Hours and Equipment Cost TOTALS	2,637.00	0	-	-

Labor			
fitter/mechanic hours	-		
job adjustment factor		100%	
total adjusted hours	0.00 hrs. @	55.00	-
foreman	0.00 hrs. @	61.00	-
Super intendant	0.00 hrs. @	65.00	-
Labor Subtotal			-

Subcontracts	
i.	
ii.	
iii.	
iv.	
v.	
Subcontract Subtotal	-

Totals		
a. Equipment		-
b. Labor Cost		-
c. Material Cost		-
d. Equip&Tools/JE		-
e. Sales Tax	7.0%	-
f. Surtax		
g. Subcontracts		2,637.00
h. Field Direct Costs		-
i. Subtotal		2,637.00
j. Overhead	5.0%	131.85
k. Total Net Cost		2,768.85
l. Profit	10.0%	276.89
m Bond & Insurance	2.0%	55.38

Total Proposed Change Order Amount **3,101.11**

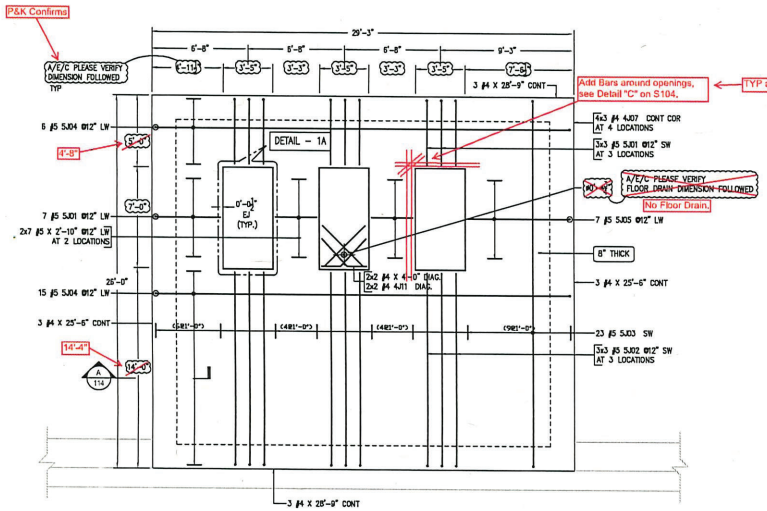

LAYOUT OF IR PUMP STATION SLAB & PAD REINFORCING DETAILS

SCALE = 1/4" = 1'-0"

1

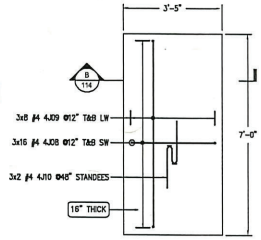

CONTRACTOR PLEASE VERIFY EQUIPMENT PAD DIMENSIONS & REINF. DETAILS FOLLOWED

DETAIL - 1A

SCALE = 1/2" = 1'-0"

(AT 3 LOCATIONS)

16" DEPTH

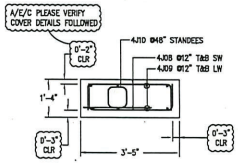

SECTION B 114

SCALE = 1/2" = 1'-0"

Release Code: 114																	BENDING DETAILS.						
Bar Mark	Qty	Size	Total length	Type	'A'	'B'	'C'	'D'	'E'	'F'	'G'	'H'	'J'	'K'	'L'	'M'	'N'
4J07	12	#4	4'0"	01		2'0"	2'0"										
4J08	48	#4	4'0"	01		0'11"	2'10"	0'11"									
4J09	24	#4	8'4"	01		0'11"	6'6"	0'11"									
4J10	6	#4	52'6"	25		75'	0'9 1/2"	0'8"	0'9 1/2"	75'			0'8"		0'4 1/2"		
4J11	4	#4	2'10 1/2"	03		2'3 1/2"	2'7"						0'10 1/2"		0'8 1/2"	2'7"	
5J01	16	#5	5'4"	02	0'10"	4'6"											
5J02	9	#5	14'4"	02	0'10"	13'6"											
5J03	23	#5	27'2"	02	0'10"	25'6"						0'10"					
5J04	23	#5	30'5"	02	0'10"	28'9"						0'10"					
5J05	7	#5	7'7"	02	0'10"	7'1"											

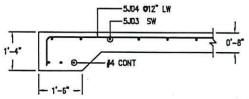

SECTION A 114

SCALE = 1/2" = 1'-0"

LAP SCHEDULE 4000 PSI		
Size	TOP	OTHER
#3	24"	19"
#4	32"	24"
#5	40"	31"
#6	48"	37"
#7	70"	54"
#8	80"	62"

A/E/C PLEASE VERIFY LAP SCHEDULE FOLLOWED

NOTES:–

A/E/C PLEASE VERIFY COVER DETAILS FOLLOWED

1. TYPICAL CLEARANCES
   A). FOR BASE SLAB TOP – 2"
   B). FOR BASE SLAB BOTTOM & SIDES – 3"
2. A/E/C PLEASE VERIFY ALL THE CLOUDED ITEMS
3. CUT TO FIT AT SITE AS REQUIRED
4. BARS TO BE PLACED AT EQUAL SPACING U.O.N.
5. TILT HOOK TO ACCOMODATE THE COVER, IF NEED

LEGENDS

ADD'L – Additional
B – Bottom Bar
CLR – Clear Cover
COL – Column
DWLS – Dowels
EL – Elevation
EF – Each Face
ES – Each Side
H/Hor – Horizontal
N.T.S – Not to Scale
PC – Pile Cap
SM – Similar
T – Top Bar
T.O.S – Top of Slab
THK – Thickness
TYP – Typical
V/Vert – Vertical

PCM 24

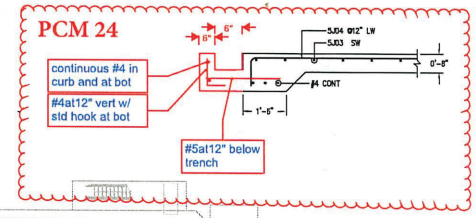

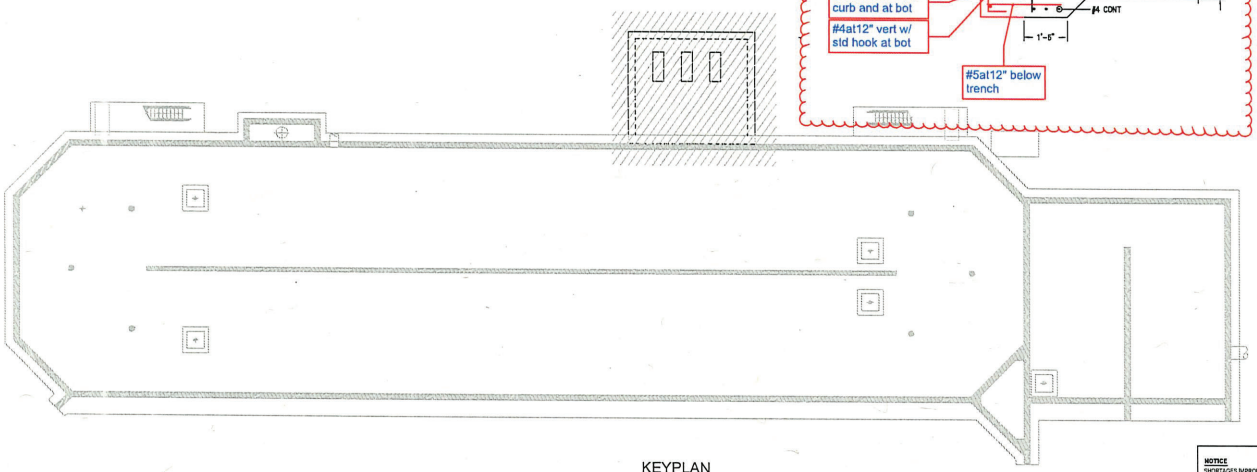

KEYPLAN

SCALE = NTS

REVISE & RESUBMIT

NOTICE

SHORTAGES,IMPROPER FABRICATION OR CLAIMS FOR ANY REASON MUST BE REPORTED TO G.PROULX ,LLC WITHIN A PERIOD OF 5 DAYS OF DELIVERY.G.PROULX ,LLC RESERVES THE RIGHT TO FIELD INSPECT PRIOR TO REPLACEMENT OR RECONSTRUCTING OF NONCONFORMING MATERIAL, AND WILL NOT HONOR CHARGES FOR WORK DONE IN THE FIELD WITHOUT SPECIFIC AUTORIZATION FROM THIS COMPANY.REINFORCING STEEL PLACING DRAWING ONLY.USE IN CONJUCTION WITH CONTRACT DRAWINGS,SPECIFICATIONS,ELEVATIONS & DIMENSIONS SHOWN ON THIS DRAWING ARE FOR DETAILING PURPOSES ONLY AND SHOULD NOT BE USED FOR CONSTRUCTION UNLESS VERIFIED BY THE ENGINEER ON THE CONTRACTOR THE DETAILING OF THIS PLAN IS DONE IN CONJUCTION WITH STRUCTURAL,S AND IN SOME CASES WITH ARCHITECTURALS IF PROVIDED. ALL DIMENSIONS & QUANTITIES ARE TO BE THE CONTRACTORS RESPONSIBILITY.G.PROULX ,LLC WILL NOT BE HELD RESPONSIBLE FOR ANY SHOP DRAWINGS THAT ARE SUBMITTED FOR APPROVAL ARE NOT APPROVED BY THE CONTRACTOR PRIOR TO RELEASE OF REBAR.

G.PROULX BUILDING PRODUCTS LLC
3125 SOUTH ANDREWS AVENUE
FORT LAUDERDALE, FL 33316
PHONE: (954) 922-1423 FAX: (954) 922-1698

REVISIONS		
1	APPROVAL	
1	RESUBMIT (12.04.2024)	

JOB NAME: EASTPORT WRF
PORT CHARLOTTE, FLORIDA

DESCRIPTION: IR PUMP STATION SLAB & PAD REINFORCING DETAILS

PROJECT No: G24-0128

CUSTOMER: BAKER CONCRETE

ENGINEER: WEKIVA ENGINEERING

Date: 11.13.2024
Steel ASTM Grade 60
E-Mail Address:

BY: CPI

DRWG No: 114

SECTION 00932

Alachua | Jacksonville | Tampa | Titusville
Sarasota | Winter Haven

JonesEdmunds

REQUEST FOR INFORMATION (RFI) No. 32

OWNER/CLIENT: Charlotte County Utilities PROJECT NO.: 18-0006 PROJECT MANAGER: Hendrik Dolleman

ENGINEER: Jones Edmunds & Associates, Inc. PROJECT NO.: 03405-012-09 PROJECT MANAGER: Tom Friedrich

CONTRACTOR: Poole & Kent Company of FL PROJECT NO.: 24801 PROJECT MANAGER: Mike Lauer

PROJECT NAME: Charlotte County Utilities East Port Water Reclamation Facility (WRF) 9 MGD Expansion

TO: Gregg Fruecht DATE: 5/24/24

RE: CONTRACT DOCUMENT REFERENCE(S):

FROM: Michael Lauer

DESCRIPTION OF RFI:

☐ INFORMATION ☐ CLARIFICATION ☐ INTERPRETATION

is Requested for the Items Described Below or in the Attached:

Please see the attached RFI regarding the IR Pump Pad drain. This is shown only on the mechanical drawings with no detail on what is intended to be installed or used as the drain, please review and advise.

RESPONSE REQUESTED BY: 5/24/24 Michael Lauer

DATE *SIGNATURE*

TO: Mike Lauer DATE: 03.05.2025

FROM: Gregg Fruecht / Jones Edmunds

RESPONSE TO RFI NO.: 32

Our Response to your Request for ☐ INFORMATION ☒ CLARIFICATION ☐ INTERPRETATION

is Described Below or in the Attached: Please install per attached markup - PDF pages 2 & 3.
PCM to follow.

ATTACHMENT:

SIGNATURE

Alachua | Jacksonville | Tampa | Titusville
Sarasota | Winter Haven

JonesEdmunds

PROPOSED CONTRACT MODIFICATION (PCM) No. 24

OWNER/CLIENT: Charlotte County Utilities PROJECT NO.: 18-0006 PROJECT MANAGER: Hendrik Dolleman

ENGINEER: Jones Edmunds & Associates, Inc. PROJECT NO.: 03405-012-09 PROJECT MANAGER: Tom Friedrich

CONTRACTOR: Poole & Kent Company of FL PROJECT NO.: 24801 PROJECT MANAGER: Mike Lauer

PROJECT NAME: Charlotte County Utilities East Port Water Reclamation Facility (WRF) 9 MGD Expansion

TO: Mike Lauer DATE: 03.10.2025

Please submit your proposal for an equitable adjustment in the contract amount and/or performance time in accordance with the following: *or*...Please submit an equitable itemized proposal for the following revisions:

CONTRACT DOCUMENT REFERENCE(S): Response to RFI #32-and Reinforcement Detail PDF page 2

DESCRIPTION OF MODIFICATION: Please submit your proposal for an equitable adjustment in the contract amount and/or performance time in accordance with the following:
Revised Drainage Configuration

REASON FOR MODIFICATION: To accommodate wash down procedures.

WORK DIRECTIVE:

☐ Proceed with the work immediately.

☒ Do not proceed with the work until a change order is issued.

Your response is requested by _____

xc:

SIGNATURE: _____

BAKER
CONCRETE CONSTRUCTION
expect more

Baker PCO # 9
BBC PCO #

March 14, 2025

Mike Lauer
Poole & Kent Company of Florida
1715 W. Lemon Street
Tampa, FL 33606
Attn: Mike Lauer

Re: **East Port WRF**
IR Pump Station Trench & Curb

Mike,

Attached please find pricing for Baker Concrete to provide labor, material and equipment to add a perimeter trench and curb around the IR Pump Station.

Terms and conditions of our base contract shall apply and will be made part of our final contract if accepted.

Qualifications & Assumptions:

- *ALL COSTS FOR GENERAL LIABILITY ARE EXCLUDED*
- *OVERTIME TO COMPLETE THE ADDITIONAL WORK IS NOT INCLUDED*
- *DEWATERING IS EXCLUDED*
- *EXCAVATION, HAUL OFF & BACKFILL ARE EXCLUDED*
- *ANY CHANGE THAT IS NOT CLEARLY SHOWN AND LABELED IS EXCLUDED. IT IS ASSUMED THAT ALL DETAILS HAVE BEEN COMPLETELY DESIGNED SUCH THAT ALL CHANGES CAN BE INSTALLED COMPLETE AS SHOWN. ANY FORTHCOMING DETAILS OR SUPPLEMENTARY INFORMATION MODIFYING EXISTING DETAILS ARE EXCLUDED.*
- *PRICING IS BASED ON ALL AREAS TO BE OPEN AND ACCESSIBLE AT ONE TIME FOR BAKER TO HAVE CONTINIOUS WORK AND NO INTERRUPTIONS ON A STANDARD (5) FIVE DAY 40-HOURS WORK WEEK. OUR PROPOSAL DOES NOT INCLUDE ANY RESTRICTED WORKING HOURS.*
- *ANY COSTS TO ACCELERATE THE WORK IN THIS PROPOSAL DUE TO FAILURE OF OTHERS TO PERFORM IS NOT INCLUDED*
- *PRICING IS BASED ON THE ASSUMPTION THAT BAKER WILL RECEIVE AN OFFICIAL CHANGE ORDER FOR THE ADDITIONAL WORK WITHIN 30 DAYS OF ACCEPTANCE. IT SHALL BE ACCEPTABLE TO ADD THIS PCO AS A LINE ITEM TO THE SCHEDULE OF VALUES AND BILL AGAINST IT FOR THE PERIOD THE WORK IS PERFORMED.*

Our price for completing this work (See attached): **$ 2,637**

**** Modifications to scope referenced in this PCO will require an extension to the project schedule of (0) working days.***

Should you have any questions or concerns, please contact me directly.

Respectfully,

(submitted via e-mail)

Joe Jacobs
Baker Concrete Construction, Inc.

CC: BCCI Job File #15425
K. Muir BBC

Attachments: PCO 9 Pricing Breakdown
PCM 24

Poole & Kent
Contractors
An EMCOR Company

East Port WRF MGD Expansion
Charlott County Utilities
PK Job 24801
3100 Loveland Blvd
Punta Gorda, FL 33980

Contractor Request for Information

To: Gregg Fruecht
Attn: Jones Edmunds

RFI No.: 32
Date: 5/24/2022

Project: East Port WRF MGD Expansion

Contractor: The Poole & Kent Company of Florida

Urgent Response Requested
Yes [X] No [ ]

RFI TITLE: NEW IR Pump Pad Drain
Dwg Reference: M32
Spec. Reference:

Request / Question

Please clarify the design intent on the IR Pump Pad Drain. This Drain is only shown on the overview Mechanical drawings. There is not details or structural drawings for this. Please provide further details and layout on what is intended to be installed or made for the IR Pump Pad Drain.

By: Mike Lauer/ PM
Poole and Kent
Date: 05/24/22

Response

By:
SC
Date:

Slope
Typ
5"
3"
4"
7"
10" Dia.
Grate
Slope
(Typ)

BAKER CONCRETE CONSTRUCTION expect more

PCO 9

JOB: 15425 - EAST PORT WRF
DOCUMENT: IR Pump Station Trench & Curb

TAKE OFF: DL
HDISK/FILE:
REVISED: 3/14/2025

IR Pump Station Trench & Curb

DESCRIPTION	NOTES	QTY	UNIT	Lab Amt	Mat Amt	E/O Amt	Sub Amt	Lab Total	Mat Total	Eq./Oth Total	Subcont. Total	Item Totals
Manpower								$ -	$ -	$ -	$ -	$ -
Project Managers				$102.18				$ -	$ -	$ -	$ -	$ -
Project Managers Overtime				$153.27				$ -	$ -	$ -	$ -	$ -
Project Engineer				$77.60				$ -	$ -	$ -	$ -	$ -
Project Engineer Overtime				$116.40				$ -	$ -	$ -	$ -	$ -
Foreman		2.00	hr	$68.76				$ 137.52	$ -	$ -	$ -	$ 137.52
Foreman Overtime				$101.19				$ -	$ -	$ -	$ -	$ -
Carpenter		6.00	hr	$47.15				$ 282.90	$ -	$ -	$ -	$ 282.90
Carpenter Overtime				$68.76				$ -	$ -	$ -	$ -	$ -
Concrete Placer and Finisher				$47.15				$ -	$ -	$ -	$ -	$ -
Concrete Placer and Finisher Overtime				$68.76				$ -	$ -	$ -	$ -	$ -
Field Engineers/ Layout		1.00	hr	$77.60				$ 77.60	$ -	$ -	$ -	$ 77.60
Field Engineers/ Layout Overtime				$114.46				$ -	$ -	$ -	$ -	$ -
Superintendent/Supervisor				$102.18				$ -	$ -	$ -	$ -	$ -
Superintendent/Supervisor Overtime				$153.27				$ -	$ -	$ -	$ -	$ -
Laborer				$37.32				$ -	$ -	$ -	$ -	$ -
Laborer Overtime				$55.98				$ -	$ -	$ -	$ -	$ -
								$ -	$ -	$ -	$ -	$ -
Subcontractor								$ -	$ -	$ -	$ -	$ -
Install reinforcing		4.00	hr				$90.00	$ -	$ -	$ -	$ 360.00	$ 360.00
								$ -	$ -	$ -	$ -	$ -
Materials								$ -	$ -	$ -	$ -	$ -
Reinforcing		290.00	lbs		$0.60			$ -	$ 174.00	$ -	$ -	$ 174.00
Formwork		114.00	sf		$3.50			$ -	$ 399.00	$ -	$ -	$ 399.00
Concrete		3.00	cy		$210.00			$ -	$ 630.00	$ -	$ -	$ 630.00
								$ -	$ -	$ -	$ -	$ -
Equipment								$ -	$ -	$ -	$ -	$ -
								$ -	$ -	$ -	$ -	$ -
								$ -	$ -	$ -	$ -	$ -
								$ -	$ -	$ -	$ -	$ -
								$ -	$ -	$ -	$ -	$ -
								$ -	$ -	$ -	$ -	$ -
								$ -	$ -	$ -	$ -	$ -
							Category Totals	$ 498	$ 1,203	$ -	$ 360	$ 2,061
							Tax 7.00%	$ -	$ 84	$ -	$ -	$ 84
							Burden 36.00%	$ 179	$ -	$ -	$ -	$ 179
							Sub-totals (No Fees)	$ 677	$ 1,287	$ -	$ 360	$ 2,325
							OH&P (5% on SUBS) 15.00%	$ 102	$ 193	$ -	$ 18	$ 313
							Bond 0.00%	$ -	$ -	$ -	$ -	$ -
							Totals	**$ 779**	**$ 1,480**	**$ -**	**$ 378**	$ 2,637

PCO TOTAL $ 2,637

PLOTTED: 1/9/2024 12:45 PM JOHN T. KRAMER

© Jones Edmunds 2234

NOTES:

1. EQUIPMENT PAD DIMENSIONS SHALL BE COORDINATED WITH PUMP DIMENSIONS AND STRUCTURAL DRAWINGS.

GRAPHIC SCALE
0 2 4 8
SCALE IN FEET

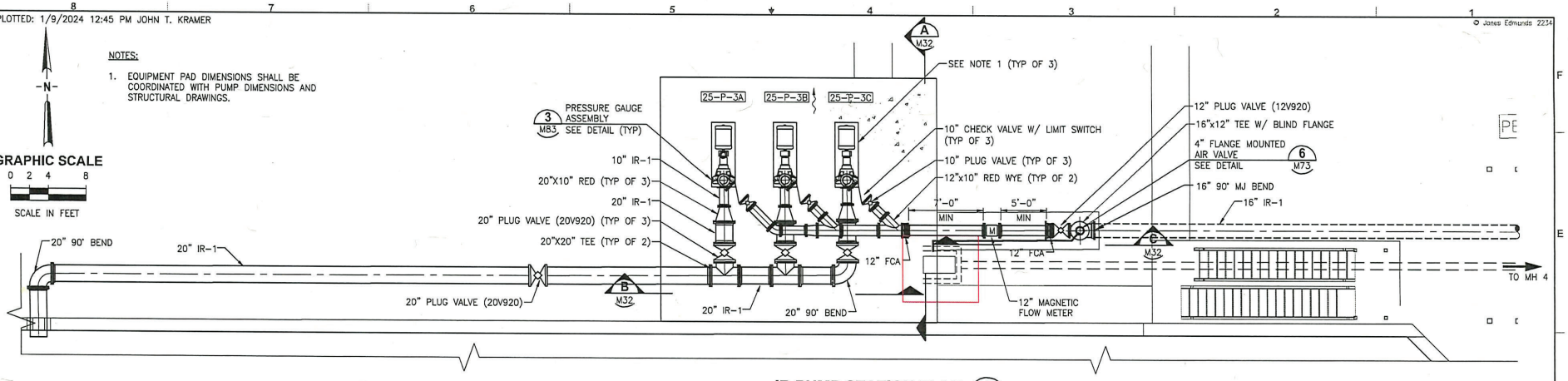

IR PUMP STATION PLAN 1 M29
3/16" = 1'-0"

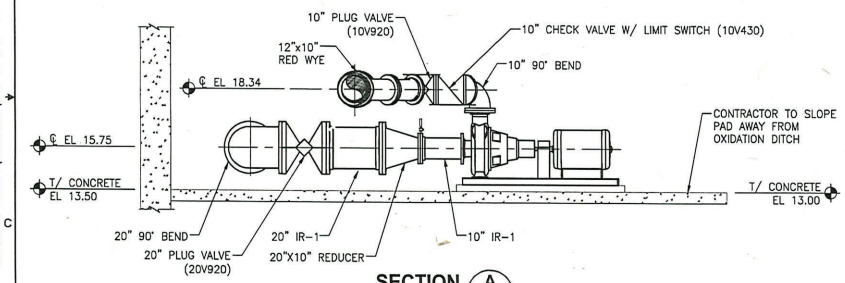

SECTION A M32
3/8" = 1'-0"

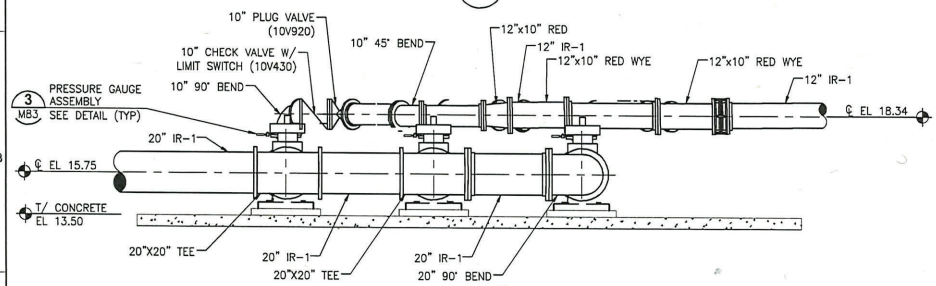

SECTION B M32
3/8" = 1'-0"

GRAPHIC SCALE
0 1 2 4
SCALE IN FEET

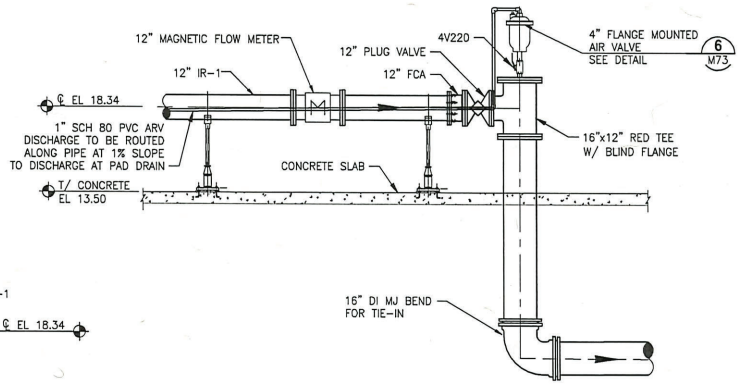

SECTION C M32
3/8" = 1'-0"

FOR CONSTRUCTION

LTR.	DATE	REVISIONS	BY	APPRD.

DESIGNED SMENARD
DRAWN JKRAMER
CHECKED TFRIEDRICH

JonesEdmunds
730 NE WALDO ROAD, GAINESVILLE, FLORIDA 32641 / (352) 377-5821
324 S. HYDE PARK AVE., SUITE 250 TAMPA, FLORIDA 33606 / (813) 258-0703

CHARLOTTE COUNTY UTILITIES
EAST PORT WATER RECLAMATION FACILITY (WRF)
9 MGD EXPANSION

IR PUMP PLAN AND SECTIONS

PROJECT NO: 03405-012-09
DATE: JANUARY 2024
INDEX NO:
DWG NO: M32

SAVED: 12/28/2022 12:54 PM JKRAMER \\JEA.NET\PAN02\WORKSPACE\03405 - CHARLOTTE COUNTY\PROJECTS\012-09-EASTPORT EXPANSION\CAD\DWGS\MECH\0340501209-M32.DWG

PLOTTED: 1/9/2024 12:45 PM JOHN T. KRAMER

NOTES:

1. EQUIPMENT PAD DIMENSIONS SHALL BE COORDINATED WITH PUMP DIMENSIONS AND STRUCTURAL DRAWINGS.

GRAPHIC SCALE
0 2 4 8
SCALE IN FEET

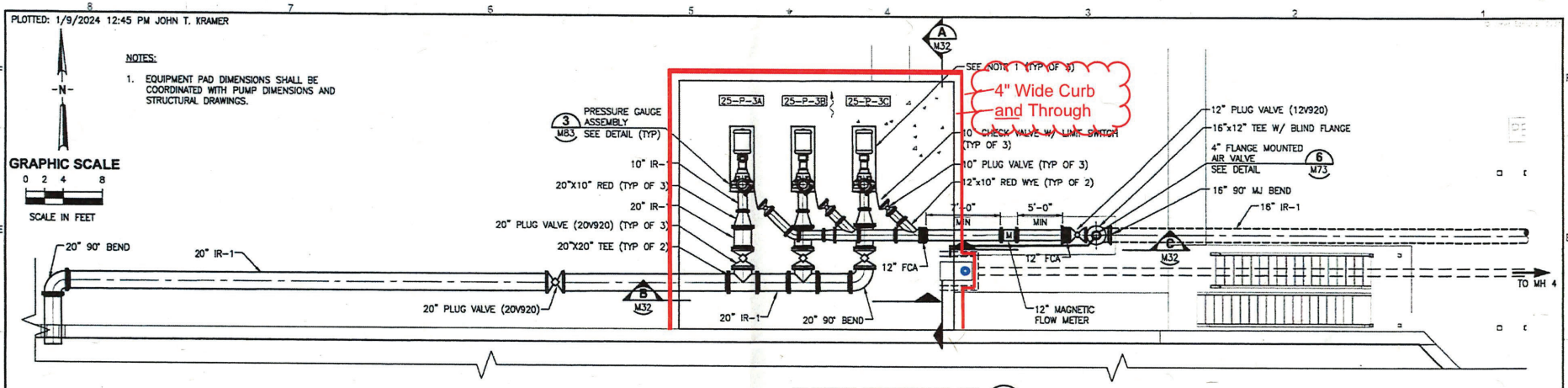

IR PUMP STATION PLAN 1 M29
3/16" = 1'-0"

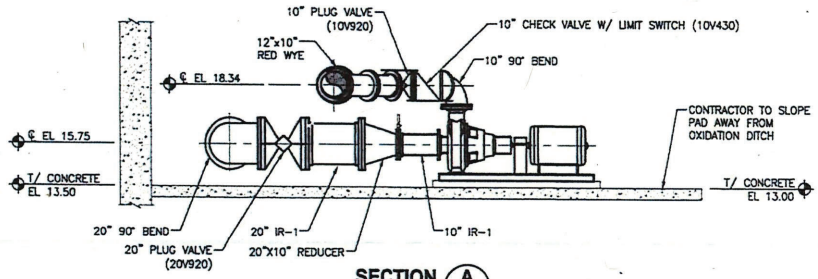

SECTION A M32
3/8" = 1'-0"

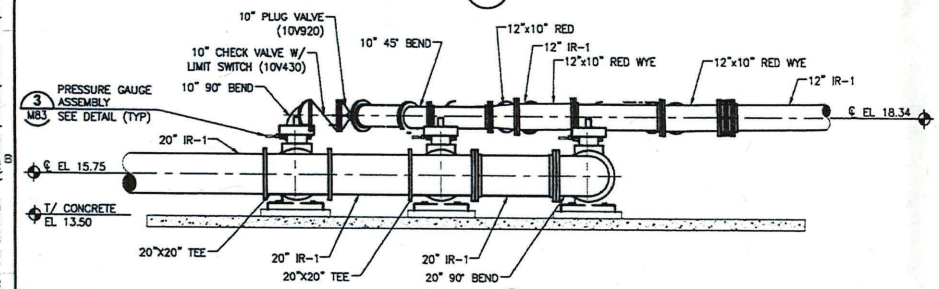

SECTION B M32
3/8" = 1'-0"

GRAPHIC SCALE
0 1 2 4
SCALE IN FEET

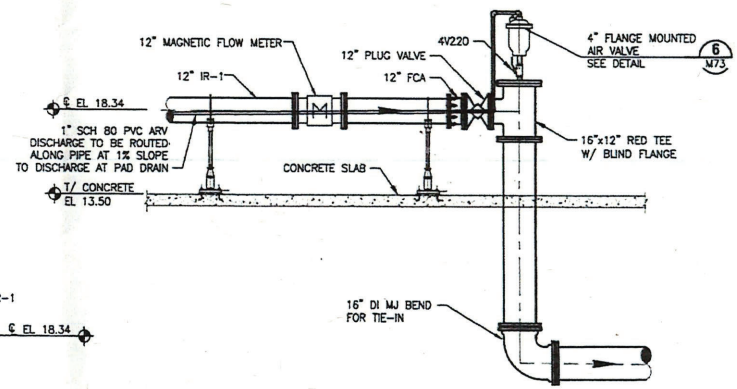

SECTION C M32
3/8" = 1'-0"

FOR CONSTRUCTION

LTR.	DATE	REVISIONS	BY	APPRD.

DESIGNED SMENARD
DRAWN JKRAMER
CHECKED TFRIEDRICH

JonesEdmunds
730 NE WALDO ROAD, GAINESVILLE, FLORIDA 32641 / (352) 377-5821
324 S. HYDE PARK AVE., SUITE 250 TAMPA, FLORIDA 33606 / (813) 258-0703

CHARLOTTE COUNTY UTILITIES
EAST PORT WATER RECLAMATION FACILITY (WRF)
9 MGD EXPANSION

IR PUMP PLAN AND SECTIONS

PROJECT NO: 03405-012-09
DATE: JANUARY 2024
INDEX NO:
DWG NO: M32

SAVED: 12/28/2022 12:54 PM JKRAMER \\JEA.NET\PAN02\WORKSPACE\03405 - CHARLOTTE COUNTY\PROJECTS\012-09-EASTPORT EXPANSION\CAD\DWGS\MECH\0340501209-M32.DWG

Poole & Kent
Contractors
An EMCOR Company

Poole & Kent Company of Florida
1781 N.W. North River Drive
Miami, FL 33125
P.O. Box 420556
Miami, FL 33242

Phone: 305.325.1930
Fax: 305.324.0522

April 3, 2025

APPROVED

Jones Edmunds has conducted a Hydraulic Study examining inclusion of this 36" Gate Valve and there are No Exceptions. Please furnish & install at location per the County's preference.
Gregg S. Fruecht / 04.10.2025

Charlotte County Utilities
25550 Harbor View Rd
Port Charlotte, FL 33980

Attn: Hendrik Dolleman

Re: **Eastport WRF MGD Expansion Project**
Contract Number: 18-0006
Poole & Kent Project No. 24801

Subject: **PCO 33- Additional 36" Gate Valve for Isolation between Filters and CCCs**
P&K PCO No. 33

Dear Mr. Fruecht,

Poole & Kent prepared a cost estimate to include (1) additional 36" Gate Valve for isolation purposes between Filters/CCC 1&2 and Filters/CCC 3&4. We propose to incorporate the work, as clarified herein, for a lump sum increase to our contract in the amount of **$86,401.38** and (0) calendar days to the contract completion date.

This proposal includes the following clarifications.

1. This proposal is valid for a period of 21 days, after which it is void at the option of Poole & Kent.
2. Pricing is based on normal working hours and does not include any overtime.
3. Price includes only the work specifically described in our proposal and the attached subcontractor proposals. Any additional work required for this change will be quoted as it becomes known.
4. Should additional time be required for this change, we then reserve our right to a time extension and associated costs.
5. For more detailed information, please see the attached submittal and breakdown from Poole and Kent.

Please notify P&K as soon as possible if we are to proceed with the above changes. Should you have any questions, please do not hesitate to call.

Very truly yours,
POOLE & KENT COMPANY OF FLORIDA

Mike Lauer

Michael Lauer
Project Manager

Poole & Kent
Contractors
An EMCOR Company

Poole & Kent Company of Florida
1715 W Lemon St
Tampa, Fl 33606

Phone: 813-251-2438

Field Phone: 941-380-7138

Project Name **Eastport WRF MGD Expansion**
Owner: **Charlotte County Utilities**
Engineer: **Jones Edmunds**
Prime Contractor **Poole & Kent Company of Florida**

Job No. 24801

Proposed Credit Order No. 31
April 3, 2025

Sheet No	Sheet Identification	Subcontractor	Labor	Material	Equipment
1	Add (1) 36" MJ Gate Valve for redundancy and isolation purposes between Filter/CCC 1&2 and Filter/CCC 3&4.	-	-	68,277.00	
	Shipping		-	1,750.00	
			-		
				-	
		-			
	Material Cost, Labor Hours and Equipment Cost TOTALS	-	0	70,027.00	-

Labor			
fitter/mechanic hours	-		
job adjustment factor		100%	
total adjusted hours	0.00 hrs. @	55.00	-
foreman	0.00 hrs. @	61.00	-
Super intendant	0.00 hrs. @	65.00	-
Labor Subtotal			-

Subcontracts	
i.	
ii.	
iii.	
iv.	
v.	
Subcontract Subtotal	-

Totals		
a. Equipment		-
b. Labor Cost		-
c. Material Cost		70,027.00
d. Equip&Tools/JE		-
e. Sales Tax	7.0%	4,779.39
f. Surtax		
g. Subcontracts		-
h. Field Direct Costs		-
i. Subtotal		74,806.39
j. Overhead	5.0%	3,740.32
k. Total Net Cost		78,546.71
l. Profit	10.0%	7,854.67
m Bond & Insurance	2.0%	-

Total Proposed Change Order Amount **86,401.38**

FERGUSON WATERWORKS

FEL-PT. CHARLOTTE WW 1705
18305 PAULSON DRIVE
PORT CHARLOTTE, FL 33954-0000

Phone: 941-624-3494
Fax: 941-627-3519

Deliver To: .
From: Gary Morgan
gary.morgan2@ferguson.com
Comments:

12:44:19 APR 03 2025

FEL-PORT CHARLOTTE #1705
Price Quotation
Phone: 941-624-3494
Fax: 941-627-3519

Bid No: B336140
Bid Date: 04/03/25
Quoted By: GM

Cust Phone: 305-325-1930
Terms: NET 10TH PROX

Customer: POOLE AND KENT COMPANY OF
1715 W LEMON ST
24801 EAST PORT WTR RECLA
TAMPA, FL 33606

Ship To: POOLE AND KENT COMPANY OF
3100 LOVELAND BLVD
24801 EAST PORT WTR RECLAMA
.
PORT CHARLOTTE, FL 33980

Cust PO#: 24801

Job Name: 24801 EAST PORT WTR RECLA

Item	Description	Quantity	Net Price	UM	Total
	LEAD TIME 9-11 WKS				
AFC2536MMLA36SG	36 MJ RW OL GATE VLV W/ SG 316SS HDWR (AIS)	1	63967.000	EA	63967.00
SGDPPKS36DD	36 DOM SBOND 3000 PK AIS COMPLIANT	2	2155.000	EA	4310.00

Net Total:	$68277.00
Tax:	$4201.62
Freight:	$1750.00
Total:	$74228.62

Quoted prices are based upon receipt of the total quantity for immediate shipment (48 hours). SHIPMENTS BEYOND 48 HOURS SHALL BE AT THE PRICE IN EFFECT AT TIME OF SHIPMENT UNLESS NOTED OTHERWISE. QUOTES FOR PRODUCTS SHIPPED FOR RESALE ARE NOT FIRM UNLESS NOTED OTHERWISE.

Due to the uncertain impact of potential tariffs, Ferguson's quotation/proposal has not included any provision or contingency for future tariffs or increase of existing tariffs. Ferguson reserves the right to adjust prices to reflect the impact of any new or increased tariffs that affect our costs at the time of shipment. Ferguson will provide notice of any such adjustments along with documentation supporting the changes.

CONTRACTOR CUSTOMERS: IF YOU HAVE DBE/MBE/WBE//VBE/SDVBE/SBE GOOD FAITH EFFORTS DIVERSITY GOALS/ REQUIREMENTS ON A FEDERAL, STATE, LOCAL GOVERNMENT, PRIVATE SECTOR PROJECT, PLEASE CONTACT YOUR BRANCH SALES REPRESENATIVE IMMEDIATELY PRIOR TO RECEIVING A QUOTE/ORDER.

Seller not responsible for delays, lack of product or increase of pricing due to causes beyond our control, and/or based upon Local, State and Federal laws governing type of products that can be sold or put into commerce. This Quote is offered contingent upon the Buyer's acceptance of Seller's terms and conditions, which are incorporated by reference and found either following this document, or on the web at https://www.ferguson.com/content/website-info/terms-of-sale
Govt Buyers: All items are open market unless noted otherwise.

LEAD LAW WARNING: It is illegal to install products that are not "lead free" in accordance with US Federal or other applicable law in potable water systems anticipated for human consumption. Products with *NP in the description are NOT lead free and can only be installed in non-potable applications. Buyer is solely responsible for product selection.

HOW ARE WE DOING? WE WANT YOUR FEEDBACK!
Scan the QR code or use the link below to complete a survey about your bids:
https://survey.medallia.com/?bidsorder&fc=1705&on=48342

Poole & Kent
Contractors
An EMCOR Company

Poole & Kent Company of Florida
1781 N.W. North River Drive
Miami, FL 33125
P.O. Box 420556
Miami, FL 33242

Phone: 305.325.1930
Fax: 305.324.0522

April 8, 2025

APPROVED
Gregg S. Fruecht
Jones Edmunds
04.15.2025

Charlotte County Utilities
25550 Harbor View Rd
Port Charlotte, FL 33980

Attn: Hendrik Dolleman

Re: **Eastport WRF MGD Expansion Project**
Contract Number: 18-0006
Poole & Kent Project No. 24801

Subject: **Removal of Misc Piping on East Port To Date**
P&K PCO No. 34

Dear Mr. Fruecht,

Poole & Kent prepared a cost to remove Miscellaneous pipe on the east port site listed below:

- 120' of 20" DIP on North Side of AWT- 11/24/24

The price per FT was agreed upon within previous PCO. The direction for P&K to remove was given from CCC at the time of exposure and it was confirmed that all pipes need to be removed to boundaries of the job. The total costs to remove the piping listed above is **$4,214.40** and (0) additional days to the contract time.

This proposal includes the following clarifications.

1. This proposal is valid for a period of 21 days, after which it is void at the option of Poole & Kent.
2. Pricing is based on normal working hours and does not include any overtime.
3. Price includes only the work specifically described in our proposal and the attached subcontractor proposals. Any additional work required for this change will be quoted as it becomes known.
4. Should additional time be required for this change, we then reserve our right to a time extension and associated costs.
5. For more detailed information, please see the attached submittal and breakdown from Poole and Kent.
6.

Please notify P&K as soon as possible if we are to proceed with the above changes. Should you have any questions, please do not hesitate to call.

Very truly yours,
POOLE & KENT COMPANY OF FLORIDA

Mike Lauer

Michael Lauer
Project Manager

Poole & Kent
Contractors
An EMCOR Company

Poole & Kent Company of Florida
1715 W Lemon St
Tampa, Fl 33606

Phone: 813-251-2438

Field Phone: 941-380-7138

Project Name **Eastport WRF MGD Expansion**
Owner: **Charlotte County Utilities**
Engineer **Jones Edmunds**
Prime Contractor **Poole & Kent Company of Florida**

Job No. 24801

Proposed Change Order No. 34
April 8, 2025

Sheet No	Sheet Identification	Subcontractor	Labor	Material	Equipment
1	Cost of removal of abandoned pipe onsite	-			
	20" Pipe removal price per FT on Job. Confirmed with JK		0	-	-
	120' of 20" DIP on North Side of AWT- 11/24/24	4,214.40	0	-	-
				-	
		-			
	20" Price Per Ft- $35.12				
	Material Cost, Labor Hours and Equipment Cost TOTALS	4,214.40	0	-	-

Labor			
fitter/mechanic hours	-		
job adjustment factor		100%	
total adjusted hours	0.00 hrs. @	55.00	-
foreman	0.00 hrs. @	61.00	-
general foreman	0.00 hrs. @	65.00	-
Labor Subtotal			-

Subcontracts	
i.	
ii.	
iii.	
iv.	
v.	
Subcontract Subtotal	-

Totals		
a. Equipment		-
b. Labor Cost		-
c. Material Cost		-
d. Equip&Tools/JE		-
e. Sales Tax	7.0%	-
f. Surtax		
g. Subcontracts		4,214.40
h. Field Direct Costs		-
i. Subtotal		4,214.40
j. Overhead	5.0%	-
k. Total Net Cost		4,214.40
l. Profit	10.0%	-
m Bond & Insurance	2.0%	-

Total Proposed Change Order Amount **4,214.40**

Poole & Kent
Contractors
An EMCOR Company

Poole & Kent Company of Florida
1781 N.W. North River Drive
Miami, FL 33125
P.O. Box 420556
Miami, FL 33242

Phone: 305.325.1930
Fax: 305.324.0522

April 8, 2025

APPROVED
Gregg S. Fruecht
Jones Edmunds
04.15.2025

Charlotte County Utilities
25550 Harbor View Rd
Port Charlotte, FL 33980

Attn: Hendrik Dolleman

Re: **Eastport WRF MGD Expansion Project**
Contract Number: 18-0006
Poole & Kent Project No. 24801

Subject: **Removal of 24" Piping on East Port To Date**
P&K PCO No. 35

Dear Mr. Fruecht,

Poole & Kent prepared a cost to remove Miscellaneous pipe on the east port site listed below:

- 138' of 24" DIP @ Dewatering Building
- 101' of 24" HDPE @ Dewatering Building

The price per FT was agreed upon within previous PCO. The direction for P&K to remove was given from CCC at the time of exposure and it was confirmed that all pipes need to be removed to boundaries of the job. The total costs to remove the piping listed above is **$12,590.52** and (0) additional days to the contract time.

This proposal includes the following clarifications.

1. This proposal is valid for a period of 21 days, after which it is void at the option of Poole & Kent.
2. Pricing is based on normal working hours and does not include any overtime.
3. Price includes only the work specifically described in our proposal and the attached subcontractor proposals. Any additional work required for this change will be quoted as it becomes known.
4. Should additional time be required for this change, we then reserve our right to a time extension and associated costs.
5. For more detailed information, please see the attached submittal and breakdown from Poole and Kent.
6.

Please notify P&K as soon as possible if we are to proceed with the above changes. Should you have any questions, please do not hesitate to call.

Very truly yours,
POOLE & KENT COMPANY OF FLORIDA

Mike Lauer

Michael Lauer
Project Manager

Poole & Kent
Contractors
An EMCOR Company

Poole & Kent Company of Florida
1715 W Lemon St
Tampa, Fl 33606

Phone: 813-251-2438

Field Phone: 941-380-7138

Project Name **Eastport WRF MGD Expansion**
Owner: **Charlotte County Utilities**
Engineer **Jones Edmunds**
Prime Contractor **Poole & Kent Company of Florida**

Job No. 24801

Proposed Change Order No. 35
April 8, 2025

Sheet No	Sheet Identification	Subcontractor	Labor	Material	Equipment
1	Cost of removal of abandoned pipe onsite	-			
	24" Pipe removal price per FT on Job. Confirmed with JK		0	-	-
			0	-	-
	138' of 24" DIP @ Dewatering Building	7,269.84			
	101' of 24" HDPE @ Dewatering Building	5,320.68			
				-	
		-			
	24" Price Per Ft- $52.68				
	Material Cost, Labor Hours and Equipment Cost TOTALS	12,590.52	0	-	-

Labor			
fitter/mechanic hours	-		
job adjustment factor		100%	
total adjusted hours	0.00 hrs. @	55.00	-
foreman	0.00 hrs. @	61.00	-
general foreman	0.00 hrs. @	65.00	-
Labor Subtotal			-

Subcontracts	
i.	
ii.	
iii.	
iv.	
v.	
Subcontract Subtotal	-

Totals		
a. Equipment		-
b. Labor Cost		-
c. Material Cost		-
d. Equip&Tools/JE		-
e. Sales Tax	7.0%	-
f. Surtax		
g. Subcontracts		12,590.52
h. Field Direct Costs		-
i. Subtotal		12,590.52
j. Overhead	5.0%	-
k. Total Net Cost		12,590.52
l. Profit	10.0%	-
m Bond & Insurance	2.0%	-

Total Proposed Change Order Amount **12,590.52**

Poole & Kent
Contractors
An EMCOR Company

Poole & Kent Company of Florida
1781 N.W. North River Drive
Miami, FL 33125
P.O. Box 420556
Miami, FL 33242

Phone: 305.325.1930
Fax: 305.324.0522

April 8, 2025

APPROVED
Gregg S. Fruecht
Jones Edmunds
04.15.2025

Charlotte County Utilities
25550 Harbor View Rd
Port Charlotte, FL 33980

Attn: Hendrik Dolleman

Re: **Eastport WRF MGD Expansion Project**
Contract Number: 18-0006
Poole & Kent Project No. 24801

Subject: **Removal of 2-12" Piping on East Port to Date**
P&K PCO No. 36

Dear Mr. Fruecht,

Poole & Kent prepared a cost to remove Miscellaneous pipe on the east port site listed below:

- 47'- Additional 4" Scum Line at Dewatering
- 165' - 4" C900 at Oxidation Ditch
- 135'- 8" at Dewatering Building
- 196'- 6" at Dewatering Building

The price per FT was agreed upon within previous PCO. The direction for P&K to remove was given from CCC at the time of exposure and it was confirmed that all pipes need to be removed to boundaries of the job. The total costs to remove the piping listed above is **$14,671.86** and (0) additional days to the contract time.

This proposal includes the following clarifications.

1. This proposal is valid for a period of 21 days, after which it is void at the option of Poole & Kent.
2. Pricing is based on normal working hours and does not include any overtime.
3. Price includes only the work specifically described in our proposal and the attached subcontractor proposals. Any additional work required for this change will be quoted as it becomes known.
4. Should additional time be required for this change, we then reserve our right to a time extension and associated costs.
5. For more detailed information, please see the attached submittal and breakdown from Poole and Kent.
6.

Please notify P&K as soon as possible if we are to proceed with the above changes. Should you have any questions, please do not hesitate to call.

Very truly yours,
POOLE & KENT COMPANY OF FLORIDA

Mike Lauer

Michael Lauer
Project Manager

Poole & Kent
Contractors
An EMCOR Company

Poole & Kent Company of Florida
1715 W Lemon St
Tampa, Fl 33606

Phone: 813-251-2438

Field Phone: 941-380-7138

Project Name **Eastport WRF MGD Expansion**
Owner: **Charlotte County Utilities**
Engineer **Jones Edmunds**
Prime Contractor **Poole & Kent Company of Florida**

Job No. 24801

Proposed Change Order No. 36
April 8, 2025

Sheet No	Sheet Identification	Subcontractor	Labor	Material	Equipment
1	Cost of removal of abandoned pipe onsite	-			
	2-12" Pipe removal price per FT on Job. Confirmed with JK		0	-	-
			0	-	-
	47'- Additional 4" Scum Line at Dewatering	1,269.94			
	165' - 4" C900 at Oxidation Ditch	4,458.30			
	135'- 8" at Dewatering Building	3,647.70			
	196'- 6" at Dewatering Building	5,295.92			
		-		-	
		-			
		-			
	2-12" Price Per Ft- $27.02				
	Material Cost, Labor Hours and Equipment Cost TOTALS	14,671.86	0	-	-

Labor			
fitter/mechanic hours	-		
job adjustment factor		100%	
total adjusted hours	0.00 hrs. @	55.00	-
foreman	0.00 hrs. @	61.00	-
general foreman	0.00 hrs. @	65.00	-
Labor Subtotal			-

Subcontracts	
i.	
ii.	
iii.	
iv.	
v.	
Subcontract Subtotal	-

Totals		
a. Equipment		-
b. Labor Cost		-
c. Material Cost		-
d. Equip&Tools/JE		-
e. Sales Tax	7.0%	-
f. Surtax		
g. Subcontracts		14,671.86
h. Field Direct Costs		-
i. Subtotal		14,671.86
j. Overhead	5.0%	-
k. Total Net Cost		14,671.86
l. Profit	10.0%	-
m Bond & Insurance	2.0%	-

Total Proposed Change Order Amount **14,671.86**

Poole & Kent
Contractors
An EMCOR Company

Poole & Kent Company of Florida
1781 N.W. North River Drive
Miami, FL 33125
P.O. Box 420556
Miami, FL 33242

Phone: 305.325.1930
Fax: 305.324.0522

May 22, 2025

Charlotte County Utilities
25550 Harbor View Rd
Port Charlotte, FL 33980

Attn: Hendrik Dolleman

Re: **Eastport WRF MGD Expansion Project**
Contract Number: 18-0006
Poole & Kent Project No. 24801

Subject: **PCO 40-Passive Vents in the Chemical Feed Building**
P&K PCO No. 40

Dear Mr. Fruecht,

Poole & Kent prepared a cost estimate to core (2) 6" diameter holes and install passive vents with hoods per the direction within PCM 34 from Jones Edmunds. We propose to incorporate the work, as clarified herein, for a lump sum increase to our contract in the amount of **$1,871.77** and **(0)** calendar days to the contract completion date.

This proposal includes the following clarifications.

1. This proposal is valid for a period of 21 days, after which it is void at the option of Poole & Kent.
2. Pricing is based on normal working hours and does not include any overtime.
3. Price includes only the work specifically described in our proposal and the attached subcontractor proposals. Any additional work required for this change will be quoted as it becomes known.
4. Should additional time be required for this change, we then reserve our right to a time extension and associated costs.
5. For more detailed information, please see the attached submittal and breakdown from Poole and Kent.

Please notify P&K as soon as possible if we are to proceed with the above changes. Should you have any questions, please do not hesitate to call.

Very truly yours,
POOLE & KENT COMPANY OF FLORIDA

Mike Lauer

Michael Lauer
Project Manager

Poole & Kent
Contractors
An EMCOR Company

Poole & Kent Company of Florida
1715 W Lemon St
Tampa, Fl 33606

Phone: 813-251-2438

Field Phone: 941-380-7138

Project Name **Eastport WRF MGD Expansion**
Owner: **Charlotte County Utilities**
Engineer **Jones Edmunds**
Prime Contractor **Poole & Kent Company of Florida**

Job No. 24801

Proposed Credit Order No. 40
May 22, 2025

Sheet No	Sheet Identification	Subcontractor	Labor	Material	Equipment
1	Supply & Install Vents in Chemical Feed building	906.30	-	-	
	Core (2) 6" Holes	$682.50	-	-	
			-		
				-	
		-			
	Material Cost, Labor Hours and Equipment Cost TOTALS	1,588.80	0	-	-

Labor			
fitter/mechanic hours	-		
job adjustment factor		100%	
total adjusted hours	0.00 hrs. @	55.00	-
foreman	0.00 hrs. @	61.00	-
Super intendant	0.00 hrs. @	65.00	-
Labor Subtotal			-

Subcontracts	
i.	
ii.	
iii.	
iv.	
v.	
Subcontract Subtotal	-

Totals		
a. Equipment		-
b. Labor Cost		-
c. Material Cost		-
d. Equip&Tools/JE		-
e. Sales Tax	7.0%	-
f. Surtax		
g. Subcontracts		1,588.80
h. Field Direct Costs		-
i. Subtotal		1,588.80
j. Overhead	5.0%	79.44
k. Total Net Cost		1,668.24
l. Profit	10.0%	166.82
m Bond & Insurance	2.0%	36.70

Total Proposed Change Order Amount **1,871.77**

LEESBURG CONCRETE COMPANY, INC

ARCHITECTURAL PRECAST CONCRETE & METAL FABRICATION

Change Order #1 PROPOSAL

Date
5/16/2025 8:05

To:
Poole and Kent Company of Florida

From:
Leesburg Concrete Company, Inc.
1335 Thomas Ave.
Leesburg, FL 34748

CJ891 EAST PORT WATER - PORT CHARLOTTE

Description	Quantity	Unit	Unit Cost	Total
Furnish and Install 2 exterior 6" louvers with cap	1.00	ea	375.00	$ 375.00
Clean and Touch Up Paint	1.00	ea	480.00	$ 480.00
	-	ea	-	$ -
	-	ea	-	$ -
	-	ea	-	$ -
	-	ea	-	$ -

Total This Change Order	$	855.00
6% tax	$	51.30
Total this Change Order	**$**	**906.30**

MARGAE DONAGHY

Leesburg Concrete Company

Poole and Kent Company of Florida

Poole & Kent
Contractors
An EMCOR Company

Poole & Kent Company of Florida
1781 N.W. North River Drive
Miami, FL 33125
P.O. Box 420556
Miami, FL 33242

Phone: 305.325.1930
Fax: 305.324.0522

May 29, 2025

Charlotte County Utilities
25550 Harbor View Rd
Port Charlotte, FL 33980

Attn: Hendrik Dolleman

Re: **Eastport WRF MGD Expansion Project**
Contract Number: 18-0006
Poole & Kent Project No. 24801

Subject: **PCO 41-T&M Conduit & PB Move**
P&K PCO No. 41

Dear Mr. Fruecht,

Poole & Kent prepared a T&M Change order to relocate the conduit Duct Bank and PB that was in conflict with the newly proposed locations of the CCC and Filters 3 & 4. We propose to incorporate the work, as clarified herein, for a lump sum increase to our contract in the amount of **$11,960.66** and **(0)** calendar days to the contract completion date.

This proposal includes the following clarifications.

1. This proposal is valid for a period of 21 days, after which it is void at the option of Poole & Kent.
2. Pricing is based on normal working hours and does not include any overtime.
3. Price includes only the work specifically described in our proposal and the attached subcontractor proposals. Any additional work required for this change will be quoted as it becomes known.
4. Should additional time be required for this change, we then reserve our right to a time extension and associated costs.
5. For more detailed information, please see the attached submittal and breakdown from Poole and Kent.

Please notify P&K as soon as possible if we are to proceed with the above changes. Should you have any questions, please do not hesitate to call.

Very truly yours,
POOLE & KENT COMPANY OF FLORIDA

Mike Lauer

Michael Lauer
Project Manager

Poole & Kent
Contractors
An EMCOR Company

Poole & Kent Company of Florida
1715 W Lemon St
Tampa, Fl 33606

Phone: 813-251-2438

Field Phone: 941-380-7138

Project Name **Eastport WRF MGD Expansion**
Owner: **Charlotte County Utilities**
Engineer **Jones Edmunds**
Prime Contractor **Poole & Kent Company of Florida**

Job No. 24801

Proposed Credit Order No. 41
May 27, 2025

Sheet No	Sheet Identification	Subcontractor	Labor	Material	Equipment
1	T&M to Relocate PB and Conduit that were in conflict with CCC & Filters 3 & 4	-	-	-	1,495.00
	5/13/25- 1 Journeyman, 1 Operator	$0.00	14	-	
	5/14/25- 1 Journeyman, 1 Apprentice, 1 Operator		21		
	5/15/25- 1 Journeyman, 1 Operator		17		
	5/16/25- 1 Journeyman, 1 Apprentice, 1 Operator		3.5		
	5/16/25- 1 Journeyman, 1 Apprentice, 1 Operator		24		
	5/19/25- 1 Journeyman, 1 Apprentice, 1 Operator		24		
	5/20/25- 1 Journeyman, 1 Apprentice, 1 Operator		15	-	
	5/22/25- 1 Journeyman, 1 Apprentice, 1 Operator		10.5		
		-			
	5/15-5/21- Windemuller APM, Journeyman, Apprentice		12		
	Material Cost, Labor Hours and Equipment Cost TOTALS	-	141	-	1,495.00

Labor

fitter/mechanic hours	141.00		
job adjustment factor		100%	
total adjusted hours	141.00 hrs. @	55.00	7,755.00
foreman	10.00 hrs. @	61.00	610.00
Super intendant	4.50 hrs. @	65.00	292.50
Labor Subtotal			8,657.50

Subcontracts

i.	
ii.	
iii.	
iv.	
v.	
Subcontract Subtotal	-

Totals

a. Equipment		-
b. Labor Cost		8,657.50
c. Material Cost		-
d. Equip&Tools/JE		1,495.00
e. Sales Tax	7.0%	-
f. Surtax		
g. Subcontracts		-
h. Field Direct Costs		-
i. Subtotal		10,152.50
j. Overhead	5.0%	507.63
k. Total Net Cost		10,660.13
l. Profit	10.0%	1,066.01
m Bond & Insurance	2.0%	234.52

Total Proposed Change Order Amount **11,960.66**

Poole & Kent
Contractors

POOLE & KENT COMPANY OF FLORIDA
1710 W. LEMON STREET, TAMPA, FLORIDA 33606
PHONE: (813) 251-2438

WORK REPORT

DATE (FOR WEEK ENDING) 5-20-25 P&K JOB NO 24801

PROJECT EAST PORT WRF

CUSTOMER REFERENCE

STANDARD TIME

CLASSIFICATION	M	T	W	TH	F	TOTAL HOURS	RATE	TOTAL COST
PROJECT MANAGER						0		0.00
ASST PROJECT MANAGER						0		0.00
FIELD ENGINEER						0		0.00
SUPER-INTENDENT						0		0.00
MECH SUPER-INTENDENT						0		0.00
MECHANICAL FOREMAN						0		0.00
MECHANIC		5				0		0.00
OPERATOR		5				0		0.00
Apprentice		5				0		0.00
							TOTAL STANDARD TIME	0.00

PREMIUM TIME

CLASSIFICATION	M	T	W	TH	F	TOTAL HOURS	RATE	TOTAL COST
PROJECT MANAGER						0		0.00
ASST PROJECT MANAGER						0		0.00
FIELD ENGINEER						0		0.00
SUPER-INTENDENT						0		0.00
MECH SUPER-INTENDENT						0		0.00
MECHANICAL FOREMAN						0		0.00
MECHANIC						0		0.00
OPERATOR						0		0.00
OTHER						0		0.00
							TOTAL PREMIUM TIME	0.00

TOTAL LABOR (STANDARD AND PREMIUM) 0.00

MATERIALS (USE ADDITIONAL SHEETS IF NECESSARY)

QTY	DESCRIPTION	UNIT	TOTAL	QTY	DESCRIPTION	UNIT	TOTAL
			0.00				0.00
			0.00				0.00
			0.00				0.00
			0.00				0.00
			0.00				0.00
			0.00				0.00
			0.00				0.00
			0.00				0.00
			0.00	1	Fuel, hand tools, gloves ect.		0.00
						EXPENDABLE TOOL ALLOWANCE	0.00
						TOTAL MATERIAL COST	0.00

CONSTRUCTION EQUIPMENT

	M	T	W	TH	F	S	S	TOTAL TIME	RATE	TOTAL COST
Doosan DX85R excavator		5						0		0.00
								0		0.00
								0		0.00
								0		0.00
								0		0.00
								0		0.00
								0		0.00
									TOTAL EQUIPMENT COST	0.00

DESCRIPTION OF WORK (NOTE SUBCONTRACTORS, IF ANY)

Continue clear off conduits in conflict with the SE corner of the CCL. start to move conduits to the south.

CUSTOMER: CCU
BY [signature] DATE 5-21-25
PRINT NAME Ricky Tomlinson TITLE

POOLE & KENT COMPANY OF FLORIDA
BY [signature] DATE 5-21-25
PRINT NAME Dave Springhetti TITLE Superintendent

Poole & Kent
Contractors
An EMCOR Company

POOLE & KENT COMPANY OF FLORIDA
1715 W. LEMON STREET, TAMPA, FLORIDA 33606
PHONE: (813) 251-2438

WORK REPORT

DATE (OR WEEK ENDING): 5-15 / 5-21 P&K JOB NO
PROJECT: EAST PORT WRF
CUSTOMER REFERENCE: Windemuller

5-21 5-15 5-16

STANDARD TIME

5-19

CLASSIFICATION	M	T	W	TH	F	TOTAL HOURS	RATE	TOTAL COST
PROJECT MANAGER						0		0.00
ASST PROJECT MANAGER				2	1	3		0.00
FIELD ENGINEER						0		0.00
SUPER-INTENDENT						0		0.00
MECH SUPER-INTENDENT						0		0.00
MECHANICAL FOREMAN						0		0.00
MECHANIC	2		2	2	1	7		0.00
OPERATOR						0		0.00
OTHER			1		1	2		0.00
						TOTAL STANDARD TIME		0.00

PREMIUM TIME

CLASSIFICATION	M	T	W	TH	F	TOTAL HOURS	RATE	TOTAL COST
PROJECT MANAGER						0		0.00
ASST PROJECT MANAGER						0		0.00
FIELD ENGINEER						0		0.00
SUPER-INTENDENT						0		0.00
MECH SUPER-INTENDENT						0		0.00
MECHANICAL FOREMAN						0		0.00
MECHANIC						0		0.00
OPERATOR						0		0.00
OTHER						0		0.00
						TOTAL PREMIUM TIME		0.00
						TOTAL LABOR (STANDARD AND PREMIUM)		0.00

MATERIALS (USE ADDITIONAL SHEETS IF NECESSARY)

QTY	DESCRIPTION	UNIT	TOTAL	QTY	DESCRIPTION	UNIT	TOTAL
5'	of 2" PVC split conduit		0.00				0.00
			0.00				0.00
2	2" pvc split adapter coupling		0.00				0.00
			0.00				0.00
			0.00				0.00
			0.00				0.00
			0.00				0.00
			0.00				0.00
						EXPENDABLE TOOL ALLOWANCE	0.00
						TOTAL MATERIAL COST	0.00

CONSTRUCTION EQUIPMENT

	M	T	W	TH	F	S	S	TOTAL TIME	RATE	TOTAL COST
								0		0.00
								0		0.00
								0		0.00
								0		0.00
								0		0.00
								0		0.00
								0		0.00
									TOTAL EQUIPMENT COST	0.00

DESCRIPTION OF WORK: (NOTE SUBCONTRACTORS, IF ANY)

Work on Moving pull box in conflict with NW corner of the filters 5-15, 5-16
Repairing broken / separated conduits @ pull box & @ duct bank @
S.E. corner of the CCC.

CUSTOMER: CCW
BY: Ricky Tomlinson DATE: 5-21-25
PRINT NAME: Ricky Tomlinson TITLE:

POOLE & KENT COMPANY OF FLORIDA
BY: [signature] DATE: 5-21-25
FAX PRINTED NAME BY SIGNATURE
PRINT NAME: Dave Springhetti TITLE: superintendent

Poole & Kent
Contractors
An EMCOR Company

POOLE & KENT COMPANY OF FLORIDA
1715 W. LEMON STREET, TAMPA, FLORIDA 33606
PHONE: (813) 251-2438

WORK REPORT

DATE (OR WEEK ENDING) 5-19-25
PROJECT EAST PORT WRF
P&K JOB NO. 24801
CUSTOMER REFERENCE

STANDARD TIME

CLASSIFICATION	M	T	W	TH	F	TOTAL HOURS	RATE	TOTAL COST
PROJECT MANAGER						0		0.00
ASST PROJECT MANAGER						0		0.00
FIELD ENGINEER						0		0.00
SUPER-INTENDENT	1					1		0.00
MECH SUPER-INTENDENT						0		0.00
MECHANICAL FOREMAN						0		0.00
MECHANIC	8					8		0.00
OPERATOR	8					8		0.00
Apprentice	8					8		0.00
TOTAL STANDARD TIME								0.00

PREMIUM TIME

CLASSIFICATION	M	T	W	TH	F	TOTAL HOURS	RATE	TOTAL COST
PROJECT MANAGER						0		0.00
ASST PROJECT MANAGER						0		0.00
FIELD ENGINEER						0		0.00
SUPER-INTENDENT						0		0.00
MECH SUPER-INTENDENT						0		0.00
MECHANICAL FOREMAN						0		0.00
MECHANIC						0		0.00
OPERATOR						0		0.00
OTHER:						0		0.00
TOTAL PREMIUM TIME								0.00

TOTAL LABOR (STANDARD AND PREMIUM) 0.00

MATERIALS (USE ADDITIONAL SHEETS IF NECESSARY)

QTY.	DESCRIPTION	UNIT	TOTAL	QTY.	DESCRIPTION	UNIT	TOTAL
			0.00				0.00
			0.00				0.00
			0.00				0.00
			0.00				0.00
			0.00				0.00
			0.00				0.00
			0.00				0.00
			0.00				0.00
							0.00
						EXPENDABLE TOOL ALLOWANCE	0.00
						TOTAL MATERIAL COST	0.00

CONSTRUCTION EQUIPMENT

	M	T	W	TH	F	S	S	TOTAL TIME	RATE	TOTAL COST
Dosan DX85R excavator	8							8		0.00
								0		0.00
								0		0.00
								0		0.00
								0		0.00
								0		0.00
								0		0.00
								TOTAL EQUIPMENT COST		0.00

DESCRIPTION OF WORK: (NOTE SUBCONTRACTORS, IF ANY)

Continue w/ cleaning off conduit in conflict with the S.E. corner of the CCC.

CUSTOMER:
BY: [signature] (REPRESENTATIVE SIGNATURE) DATE 5-20-25
PRINT NAME: Ricky Tomlinson TITLE:

POOLE & KENT COMPANY OF FLORIDA
BY: [signature] (P&K REPRESENTATIVE SIGNATURE) DATE 5-20-25
PRINT NAME: Dave Springhetti TITLE: Supintendent

Poole & Kent
Contractors
An EMCOR Company

POOLE & KENT COMPANY OF FLORIDA
1715 W. LEMON STREET, TAMPA, FLORIDA 33606
PHONE: (813) 251-2438

WORK REPORT

DATE (OR WEEK ENDING) 5-14-25
P&K JOB NO 248801
PROJECT EAST PORT WRF
CUSTOMER REFERENCE

STANDARD TIME

CLASSIFICATION	M	T	W	TH	F	TOTAL HOURS	RATE	TOTAL COST
PROJECT MANAGER						0		0.00
ASST PROJECT MANAGER						0		0.00
FIELD ENGINEER						0		0.00
SUPER-INTENDENT						0		0.00
MECH SUPER-INTENDENT						0		0.00
MECHANICAL FOREMAN						0		0.00
MECHANIC			8			8		0.00
OPERATOR			8			8		0.00
Apprentice			5			5		0.00
							TOTAL STANDARD TIME	0.00

PREMIUM TIME

CLASSIFICATION	M	T	W	TH	F	TOTAL HOURS	RATE	TOTAL COST
PROJECT MANAGER						0		0.00
ASST PROJECT MANAGER						0		0.00
FIELD ENGINEER						0		0.00
SUPER-INTENDENT						0		0.00
MECH SUPER-INTENDENT						0		0.00
MECHANICAL FOREMAN						0		0.00
MECHANIC						0		0.00
OPERATOR						0		0.00
OTHER						0		0.00
							TOTAL PREMIUM TIME	0.00

TOTAL LABOR (STANDARD AND PREMIUM) 0.00

MATERIALS (USE ADDITIONAL SHEETS IF NECESSARY)

QTY	DESCRIPTION	UNIT	TOTAL	QTY	DESCRIPTION	UNIT	TOTAL
			0.00				0.00
			0.00				0.00
			0.00				0.00
			0.00				0.00
			0.00				0.00
			0.00				0.00
			0.00				0.00
			0.00				0.00
			0.00	1	Fuel, gloves, water, ect		0.00
						EXPENDABLE TOOL ALLOWANCE	0.00
						TOTAL MATERIAL COST	0.00

CONSTRUCTION EQUIPMENT

	M	T	W	TH	F	S	S	TOTAL TIME	RATE	TOTAL COST
Dosan DX85R Excavator			8					0		0.00
								0		0.00
								0		0.00
								0		0.00
								0		0.00
								0		0.00
								0		0.00
							TOTAL EQUIPMENT COST			0.00

DESCRIPTION OF WORK: (NOTE SUBCONTRACTORS, IF ANY)

Continue excavation / dig, chip conc. on West side start back on south side expose & clean off conduit @ electrical pull box that is in conflict w/ the N.W corner of filter #3.

CUSTOMER: CCU
BY [signature] (AUTHORIZED SIGNATURE) DATE 5-15-25
PRINT NAME Ricky Tomlinson TITLE

POOLE & KENT COMPANY OF FLORIDA
BY [signature] (P&K FOREMAN'S SIGNATURE) DATE 5-15-25
PRINT NAME Dave Spaghetti TITLE Superintendent

Poole & Kent
Contractors
An EMCOR Company

POOLE & KENT COMPANY OF FLORIDA
1715 W. LEMON STREET, TAMPA, FLORIDA 33604
PHONE: (813) 251-2438

WORK REPORT

DATE (OR WEEK ENDING) 5-13-25 P&K JOB NO. 24801

PROJECT EAST PORT WRF

CUSTOMER REFERENCE

STANDARD TIME

CLASSIFICATION	M	T	W	TH	F	TOTAL HOURS	RATE	TOTAL COST
PROJECT MANAGER						0		0.00
ASST PROJECT MANAGER						0		0.00
FIELD ENGINEER								0.00
SUPER-INTENDENT		1				1		0.00
MECH SUPER-INTENDENT						0		0.00
MECHANICAL FOREMAN						0		0.00
MECHANIC		7				7		0.00
OPERATOR		7				7		0.00
OTHER:						0		0.00
							TOTAL STANDARD TIME	0.00

PREMIUM TIME

CLASSIFICATION	M	T	W	TH	F	TOTAL HOURS	RATE	TOTAL COST
PROJECT MANAGER						0		0.00
ASST PROJECT MANAGER						0		0.00
FIELD ENGINEER						0		0.00
SUPER-INTENDENT						0		0.00
MECH SUPER-INTENDENT						0		0.00
MECHANICAL FOREMAN						0		0.00
MECHANIC						0		0.00
OPERATOR						0		0.00
OTHER:						0		0.00
							TOTAL PREMIUM TIME	0.00

TOTAL LABOR (STANDARD AND PREMIUM) 0.00

MATERIALS (USE ADDITIONAL SHEETS IF NECESSARY)

QTY	DESCRIPTION	UNIT	TOTAL	QTY	DESCRIPTION	UNIT	TOTAL
			0.00				0.00
			0.00				0.00
			0.00				0.00
			0.00				0.00
			0.00				0.00
			0.00				0.00
			0.00				0.00
			0.00	1	Fuel, gloves, water, etc.		0.00
						EXPENDABLE TOOL ALLOWANCE	0.00
						TOTAL MATERIAL COST	0.00

CONSTRUCTION EQUIPMENT

	M	T	W	TH	F	S	S	TOTAL TIME	RATE	TOTAL COST
Doosan DX85R Excavator		7						7		0.00
								0		0.00
								0		0.00
								0		0.00
								0		0.00
								0		0.00
								0		0.00
									TOTAL EQUIPMENT COST	0.00

DESCRIPTION OF WORK: (NOTE SUBCONTRACTORS, IF ANY)

Excavate/dig on West side of Electrical pull box that is in conflict with the N.W. corner of filter #3

CUSTOMER: CCU
BY [signature] (REPRESENTATIVE SIGNATURE) DATE 5-14-25
PRINT NAME Ricky Tomlinson TITLE

POOLE & KENT COMPANY OF FLORIDA
BY [signature] (P&K REPRESENTATIVE SIGNATURE) DATE 5-14-25
PRINT NAME DAVE Springhetti TITLE Superintendent

Poole & Kent
Contractors
An EMCOR Company

POOLE & KENT COMPANY OF FLORIDA
1715 W. LEMON STREET, TAMPA, FLORIDA 33606
PHONE: (813) 251-2438

WORK REPORT

DATE (OR WEEK ENDING) 5-16-25 P&K JOB NO. 24801
PROJECT EAST PORT WRF
CUSTOMER REFERENCE

STANDARD TIME

CLASSIFICATION	M	T	W	TH	F	TOTAL HOURS	RATE	TOTAL COST
PROJECT MANAGER						0		0.00
ASST PROJECT MANAGER						0		0.00
FIELD ENGINEER						0		0.00
SUPER-INTENDENT					1	1		0.00
MECH SUPER-INTENDENT						0		0.00
MECHANICAL FOREMAN						0		0.00
MECHANIC					8	8		0.00
OPERATOR					8	8		0.00
Apprentice					8	8		0.00
						TOTAL STANDARD TIME		0.00

PREMIUM TIME

CLASSIFICATION	M	T	W	TH	F	TOTAL HOURS	RATE	TOTAL COST
PROJECT MANAGER						0		0.00
ASST PROJECT MANAGER						0		0.00
FIELD ENGINEER						0		0.00
SUPER-INTENDENT						0		0.00
MECH SUPER-INTENDENT						0		0.00
MECHANICAL FOREMAN						0		0.00
MECHANIC						0		0.00
OPERATOR						0		0.00
OTHER:						0		0.00
						TOTAL PREMIUM TIME		0.00

TOTAL LABOR (STANDARD AND PREMIUM) 0.00

MATERIALS (USE ADDITIONAL SHEETS IF NECESSARY)

QTY.	DESCRIPTION	UNIT	TOTAL	QTY.	DESCRIPTION	UNIT	TOTAL
			0.00				0.00
			0.00				0.00
			0.00				0.00
			0.00				0.00
			0.00				0.00
			0.00				0.00
			0.00				0.00
			0.00	1	Fuel, gloves, water, ect.		0.00
						EXPENDABLE TOOL ALLOWANCE	0.00
						TOTAL MATERIAL COST	0.00

CONSTRUCTION EQUIPMENT

	M	T	W	TH	F	S	S	TOTAL TIME	RATE	TOTAL COST
DOSAN DX85R EXCAVATOR					8			8		0.00
								0		0.00
								0		0.00
								0		0.00
								0		0.00
								0		0.00
								0		0.00
									TOTAL EQUIPMENT COST	0.00

DESCRIPTION OF WORK: (NOTE SUBCONTRACTORS, IF ANY)

Continue excavation & clearing off conduit in conflict with the S.E corner of the CCC.

CUSTOMER: CCC
BY: [signature] (REPRESENTATIVE SIGNATURE) DATE 5-16-25
PRINT NAME: Ricky Tomlinson TITLE

POOLE & KENT COMPANY OF FLORIDA
BY: [signature] (P&K REPRESENTATIVE SIGNATURE) DATE 5-19-25
PRINT NAME: Dave Springhetti TITLE: superintendant

Poole & Kent
Contractors
An EMCOR Company

POOLE & KENT COMPANY OF FLORIDA
1715 W. LEMON STREET, TAMPA, FLORIDA 33606
PHONE: (813) 251-2438

WORK REPORT

DATE (OR WEEK ENDING) 5-15-25 P&K JOB NO 24801
PROJECT EAST PORT WRF
CUSTOMER REFERENCE

STANDARD TIME

CLASSIFICATION	M	T	W	TH	F	TOTAL HOURS	RATE	TOTAL COST
PROJECT MANAGER						0		0.00
ASST PROJECT MANAGER						0		0.00
FIELD ENGINEER						0		0.00
SUPER-INTENDENT				1		1		0.00
MECH SUPER-INTENDENT						0		0.00
MECHANICAL FOREMAN						0		0.00
MECHANIC				8		8		0.00
OPERATOR				8		8		0.00
OTHER:						0		0.00
							TOTAL STANDARD TIME	0.00

PREMIUM TIME

CLASSIFICATION	M	T	W	TH	F	TOTAL HOURS	RATE	TOTAL COST
PROJECT MANAGER						0		0.00
ASST PROJECT MANAGER						0		0.00
FIELD ENGINEER						0		0.00
SUPER-INTENDENT						0		0.00
MECH SUPER-INTENDENT						0		0.00
MECHANICAL FOREMAN						0		0.00
MECHANIC						0		0.00
OPERATOR						0		0.00
OTHER:						0		0.00
							TOTAL PREMIUM TIME	0.00
							TOTAL LABOR (STANDARD AND PREMIUM)	0.00

MATERIALS (USE ADDITIONAL SHEETS IF NECESSARY)

QTY	DESCRIPTION	UNIT	TOTAL	QTY	DESCRIPTION	UNIT	TOTAL
			0.00				0.00
			0.00				0.00
			0.00				0.00
			0.00				0.00
			0.00				0.00
			0.00				0.00
			0.00				0.00
			0.00	1	Fuel, gloves, water ect		0.00
						EXPENDABLE TOOL ALLOWANCE	0.00
						TOTAL MATERIAL COST	0.00

CONSTRUCTION EQUIPMENT

	M	T	W	TH	F	S	S	TOTAL TIME	RATE	TOTAL COST
Doosan DX85R Excavator				8				8		0.00
								0		0.00
								0		0.00
								0		0.00
								0		0.00
								0		0.00
								0		0.00
									TOTAL EQUIPMENT COST	0.00

DESCRIPTION OF WORK: (NOTE SUBCONTRACTORS, IF ANY)

Finish up excavating & clearing path for conduits & pull box to be moved. (pull box in conflict w/ filter #3). Start excavating & clearing off conduits that are in conflict w/ the SE. corner of the CCC.

CUSTOMER: CCU
BY [signature] (REPRESENTATIVE SIGNATURE) DATE 5-16-25
PRINT NAME Ricky Tomlinson TITLE

POOLE & KENT COMPANY OF FLORIDA
BY [signature] (P&K REPRESENTATIVE SIGNATURE) DATE 5-16-25
PRINT NAME Dave Springhetti TITLE Superintendent

Poole & Kent
Contractors
An EMCOR Company

POOLE & KENT COMPANY OF FLORIDA
1715 W. LEMON STREET, TAMPA, FLORIDA 33606
PHONE: (813) 251-2438

WORK REPORT

DATE (OR WEEK ENDING) 5-16-25 P&K JOB NO 24801
PROJECT EAST PORT WRF
CUSTOMER REFERENCE

STANDARD TIME

CLASSIFICATION	M	T	W	TH	F	TOTAL HOURS	RATE	TOTAL COST
PROJECT MANAGER						0		0.00
ASST PROJECT MANAGER						0		0.00
FIELD ENGINEER						0		0.00
SUPER-INTENDENT					.5	.5		0.00
MECH SUPER-INTENDENT						0		0.00
MECHANICAL FOREMAN						0		0.00
MECHANIC					1	1		0.00
OPERATOR					1	1		0.00
Apprentice					1	1		0.00
						TOTAL STANDARD TIME		0.00

PREMIUM TIME

CLASSIFICATION	M	T	W	TH	F	TOTAL HOURS	RATE	TOTAL COST
PROJECT MANAGER						0		0.00
ASST PROJECT MANAGER						0		0.00
FIELD ENGINEER						0		0.00
SUPER-INTENDENT						0		0.00
MECH SUPER-INTENDENT						0		0.00
MECHANICAL FOREMAN						0		0.00
MECHANIC						0		0.00
OPERATOR						0		0.00
OTHER:						0		0.00
						TOTAL PREMIUM TIME		0.00
						TOTAL LABOR (STANDARD AND PREMIUM)		0.00

MATERIALS (USE ADDITIONAL SHEETS IF NECESSARY)

QTY	DESCRIPTION	UNIT	TOTAL	QTY	DESCRIPTION	UNIT	TOTAL
			0.00				0.00
			0.00				0.00
			0.00				0.00
			0.00				0.00
			0.00				0.00
			0.00				0.00
			0.00				0.00
			0.00	1	Fuel, glove, water ect.		0.00
						EXPENDABLE TOOL ALLOWANCE	0.00
						TOTAL MATERIAL COST	0.00

CONSTRUCTION EQUIPMENT

	M	T	W	TH	F	S	S	TOTAL TIME	RATE	TOTAL COST
TAKEUCHI TB2150 Excavator					1			1		0.00
								0		0.00
								0		0.00
								0		0.00
								0		0.00
								0		0.00
								0		0.00
									TOTAL EQUIPMENT COST	0.00

DESCRIPTION OF WORK: (NOTE SUBCONTRACTORS, IF ANY)

Move Electrical pull box 30" to the West, reset elevation.

CUSTOMER:
BY [signature] (REPRESENTATIVE SIGNATURE) DATE 5-16-25
PRINT NAME Ricky Tomlinson TITLE

POOLE & KENT COMPANY OF FLORIDA
BY [signature] (P&K REPRESENTATIVE SIGNATURE) DATE 5-16-25
PRINT NAME DAVE Springhetti TITLE Superintendant

synergy EQUIPMENT

6111 PORTER WAY
SARASOTA, FL 34232
TEL: 941-780-9444

AUG 6 - 2024

Remit To:
MAIL CODE 5640
P.O. BOX 71200
CHARLOTTE, NC 28272-1200

4 WEEK BILL

Customer: 1087
POOLE AND KENT CO
1781 NW NORTH RIVER DR
MIAMI, FL 33125

Job Site:
LOVELAND WWTP
3100 LOVELAND BLVD
PORT CHARLOTTE, FL 33980

Invoice #...	947737-0007
Invoice date	7/27/24
Date out....	4/12/24 11:00 AM
Billed thru.	8/02/24
Job Loc.....	3100 LOVELAND BLVD, PORT CHARLOTT
Job No.....	01092389678
P.O. #.....	24801
Ordered By..	DAVE SPRINGETTI
Terms.....	Net 30 Days
Sales Rep:	BLAKE CHANDLER
Written by..	

Qty	Equipment #	Day	Week	4 Week	
1	COMPACT EXCAVATOR-8-9T-14-15' DEPTH	585.00	1495.00	2995.00	2995.00
	70510256 Make: DOOSAN Model: DX85R-3 Ser #: CEAAV-003652				
	HR OUT1 1083.80 HR IN1 TOTAL: 1083.80				
	Sandplate				
1	BUCKET-COMPACT EXCAVATOR-8-9T-24"				N/C

SALES ITEMS:

Qty	Item number	Unit	Price	
1	ENV	EA	89.850	89.85
	ENVIRONMENTAL FEE			

Sub-total:	3084.85
Damage waiver:	449.25
Tax:	215.94
Total:	3750.04

BILLED FOR FOUR WEEKS 7/05/24 THRU 8/02/24 11:00 AM

DATE 8/20/24
PO NO –
JOB NO 24B01
CLASS CODE JE5000
PROJ MGR APPROV AM
OFFICER APPROV
SALES TAX ☐Y ☐N

The above Equipment has been received in good repair and operating condition.
**Customer acknowledges that this transaction is governed by Synergy's terms and conditions which are set forth, in part, on the reverse side of this Agreement, and in full at www.synergyequip.com, which terms and conditions are incorporated by reference herein, and customer agrees that said terms and conditions shall be applicable to the exclusion of any other terms and conditions.

Signature: _____ Date: _____

Printed Name: _____

SYINV1

KEY DEPOSIT $5.00
Initial: _____

IF EQUIPMENT DOES NOT WORK PROPERLY NOTIFY OFFICE AT ONCE.

Terms: Net due 30 days. 1.5% service charge per month after 30 days.

DAVE 954-914-4369

Administrative Change Approval Form Order

East Port Water Reclamation Facility Expansion

Contract #:	2023000485	Change Order #:	5
Original Contract:	$106,188,600.00	Original Contingency:	$5,309,430.00
Previous Change Orders:	$316,884.91	Previous Contingency Changes:	$424,489.64
This Change:	$134,811.70	New Contingency Balance:	$4,750,128.66
Revised Contract Amount:	$106,640,296.61	Original Contract Time:	900 days
Current Completion Date:	12/30/2026	Previous Additional Time:	173 days

Items to be changed: Description & Justification

CCU is requesting approval for Change Order #5 due to necessary modifications that are critical for the successful operation of the approved design.

CO-5.1 Based on the expertise and preferences of the plant staff, this change accommodates washdown procedures, which are crucial for optimizing performance.

CO-5.2 Addresses the redundancy that CCU aims to achieve throughout the plant. It allows filters to be taken offline for maintenance while continuing to produce reclaimed water.

CO-5.3 Addresses the need to remove old and abandoned 20-inch ductile iron pipe found within the project footprint to allow for future growth.

CO-5.4 Addresses the need to remove old and abandoned 24-inch pipe found within the project footprint to allow for future growth.

CO-5.5 Addresses the need to remove old and abandoned miscellaneous pipe sizes ranging from 2 inches to 12 inches, found within the project footprint to allow for future growth.

CO-5.6 Addresses the need to core (2) 6" diameter holes and install passive vents with hoods per direction within PCM34.

CO-5.7 Addresses the need to relocate existing infrastructure to accommodate the placement of the chlorine contact chamber and filter, both of which are required for a fully functioning AWT system.

These changes are essential not just for compliance, but for delivering a high-quality, operationally sound project.

Contract Specialist:	True, Alisa	Phone:	941-743-1549	Fax:	941-743-1384

Change Order Total:	$134,811.70	**Total Additional Days:**	0 days

Fiscal Reviewed By:		
Vendor Information:	Michael Lauer Poole & Kent Contractors	Michael Lauer 6/11/2025 **Signature/Date**
Department Approved By:		
Purchasing Approved By:		
Administration Approved By:		