PURCHASING DIVISION

Charlotte County Administration Center
18500 Murdock Circle, Suite 344
Port Charlotte, Florida 33948-1094

Phone 941.743.1378
Fax 941.743.1384

TO: PROSPECTIVE PROPOSERS

DATE: OCTOBER 13, 2025

RE: ADDENDUM #3, RFP NO. 20250718, DESIGN – LIVE OAK POINT PARK PHASE 2

PROPOSAL DUE DATE: 3:00 p.m. (EST), OCTOBER 15, 2025

Firms are hereby notified that this addendum shall be made a part of the above-named proposal and contract documents. The following are issued to revise/clarify the proposal and contract documents, and these items shall have the same force and effect as the original proposal and contract documents. Proposals to be submitted on the above-specified date at Purchasing shall conform to the revisions and clarifications as listed herein.

ITEM # 1 QUESTIONS/ANSWERS

Q1: On the consultant evaluation form, Section VI. Present Examples of Recently Accomplished Work, A.4. references seawalls. Is that a typo?

A1: Yes, this is. In Section VI, on page 19, Item A. 4. Project delivering seawalls, please strikethrough ~~seawalls~~ and correct/change to Marine/Seawall/Civil, Coastal Engineering and Structural projects.

This addendum is binding and is to be considered as if contained within the original proposal documents of RFP No. 20250718. Firms are required to acknowledge receipt of this addendum on their proposal forms.

Alisa True for

Kimberly A. Corbett, C.P.M., CPPB
Senior Division Manager - Purchasing

KAC/rm

cc: Professional Services Committee
Clerk
File

PURCHASING DIVISION

Charlotte County Administration Center
18500 Murdock Circle, Suite 344
Port Charlotte, Florida 33948-1094

Phone 941.743.1378
Fax 941.743.1384

TO: PROSPECTIVE PROPOSERS

DATE: October 8, 2025

RE: ADDENDUM #2, RFP NO. 20250718, DESIGN – LIVE OAK POINT PARK PHASE 2

PROPOSAL DUE DATE: 3:00 p.m. (EST), OCTOBER 15, 2025

Firms are hereby notified that this addendum shall be made a part of the above-named proposal and contract documents. The following are issued to revise/clarify the proposal and contract documents, and these items shall have the same force and effect as the original proposal and contract documents. Proposals to be submitted on the above-specified date at Purchasing shall conform to the revisions and clarifications as listed herein.

ITEM # 1 QUESTIONS/ANSWERS

Q1: Does the County have a general layout plan of the proposed additions to the park (17,500sf boardwalks, T-dock fishing pier, water taxi pier, etc.)? If so, can this be shared?
A1: These are not additions. They are repairs and/or replacements depending on the approach. These were existing amenities that were destroyed in Hurricane Milton and have been deemed a total loss. Part of the scope requires an assessment of repair alternatives that could include “like for like” or a more resilient solution. Plans of what was existing are attached.

Q2: Can the County offer any additional information or details on the proposed park features? This would include site lighting, landscaping, water fountains/pavilions, etc.
A2: Those items are not included in this scope.

Q3: Will water, fire, and electrical be required on the boardwalks, fishing pier, and taxi pier?
A3: Electrical for lighting is part of the project scope. Water is not. Fire suppression may be required depending on design approach. The previous design did not because it was predominantly a concrete structure.

Q4: Would the County be willing to extend the due date for this project?
A4: This due date will not be extended.

This addendum is binding and is to be considered as if contained within the original proposal documents of RFP No. 20250718. Firms are required to acknowledge receipt of this addendum on their proposal forms.

Alisa True for

Kimberly A. Corbett, C.P.M., CPPB
Senior Division Manager - Purchasing

KAC/rm

cc: Professional Services Committee
Clerk
File

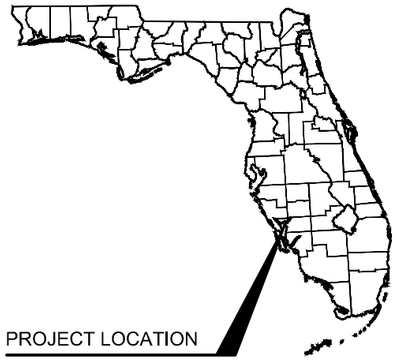

CONSTRUCTION PLANS
FOR
HARBOR WALK PHASE 1B
FOR
CHARLOTTE HARBOR COMMUNITY DEVELOPMENT AGENCY
NOVEMBER, 2016
SR 45 SECTION 01010000
BETWEEN MILE POST 14.941 AND 15.248
FINANCIAL PROJECT I.D. 429820-1-58-01
FEDERAL FUNDS

BOARD OF COUNTY COMMISSIONERS
CHARLOTTE COUNTY ADMINISTRATION CENTER
18500 MURDOCK CIRCLE
PORT CHARLOTTE, FL. 33948
PH: 941-743-1300

COMMISSIONERS
KEN DOHERTY - DISTRICT 1
CHRISTOPHER CONSTANCE - DISTRICT 2
BILL TRUEX - DISTRICT 3
STEPHEN R. DEUTSCH - DISTRICT 4
TRICIA DUFFY - DISTRICT 5

CALL 48 HOURS BEFORE YOU DIG
IT'S THE LAW! DIAL 811
811 Know what's below. Call before you dig.
SUNSHINE STATE ONE CALL OF FLORIDA, INC.

LIST OF CONTACTS

STORMWATER
CHARLOTTE COUNTY PUBLIC WORKS
ENGINEERING DIVISION
410 TAYLOR STREET
PUNTA GORDA, FL 33950
PHONE: 941-575-3657

PLANNING/ZONING
CHARLOTTE COUNTY GROWTH MANAGEMENT
CHARLOTTE COUNTY ADMINISTRATIVE COMPLEX
18500 MURDOCK CIRCLE, BUILDING B
PORT CHARLOTTE, FL 33948
MAIN NUMBER: 941-764-4903

TRANSPORTATION
FLORIDA DEPARTMENT OF TRANSPORTATION
2981 N.E. PINE ISLAND ROAD
CAPE CORAL, FLORIDA 33909
PHONE: 239-656-7807

WATER
CHARLOTTE HARBOR WATER ASSOCIATION INC.
2515 HIGHLANDS RD
PUNTA GORDA, FL 33983-3100
PHONE: 941-625-2288

SANITARY SEWER
CHARLOTTE COUNTY UTILITIES
25550 HARBOR VIEW RD, UNIT 1
PORT CHARLOTTE, FL 33980
PHONE: 941-764-4300

ELECTRIC PROVIDER
FLORIDA POWER AND LIGHT
P.O. BOX 1119 CRE/AOW
SARASOTA, FLORIDA 34230-1119
PHONE: 941-316-6623

ELECTRIC TRANSMISSION
FLORIDA POWER AND LIGHT
700 UNIVERSE BLVD TS4/JW
JUNO BEACH, FLORIDA 33408
PHONE (561) 904-3693

GAS
TECO
5901 ENTERPRISE PARKWAY
FORT MYERS, FLORIDA 33905-5004
PHONE: 239-690-5517

PHONE PROVIDER
CENTURY LINK
1020 EL JOBEAN RD., SUITE A
PORT CHARLOTTE, FLORIDA 33948
PHONE: 941-629-9311

PROJECT TEAM

OWNER/DEVELOPER
CHARLOTTE HARBOR COMMUNITY REDEVELOPMENT AGENCY
DEBORAH FORESTER, AICP. MANAGER
18501 MURDOCK CIRCLE, SUITE 502
PORT CHARLOTTE, FL. 33948
PHONE: (941) 743-6241

SURVEYOR
B. GREGORY RIETH, P.S.M.
335 TAMIAMI TRAIL
PORT CHARLOTTE, FLORIDA, 33953
PHONE: (941) 624-4900
FAX (941) 497-6186

CIVIL ENGINEER
KIMLEY-HORN AND ASSOCIATES, INC.
2601 CATTLEMEN ROAD, SUITE 200
SARASOTA, FLORIDA, 34232
PHONE: 941-379-7600

LANDSCAPE ARCHITECT
KIMLEY-HORN AND ASSOCIATES, INC.
2601 CATTLEMEN ROAD, SUITE 200
SARASOTA, FLORIDA, 34232
PHONE: 941-379-7600

ENVIRONMENTAL CONSULTANT
KIMLEY-HORN AND ASSOCIATES, INC.
445 24TH ST, SUITE 200
VERO, FLORIDA, 32960
PHONE: 772-794-4100

GEOTECHNICAL CONSULTANT
UNIVERSAL ENGINEERING SCIENCES
5971 COUNTRY LAKES DR.
FT. MYERS, FLORIDA 33905
PHONE: 239-995-1997
FAX: 239-313-2347

VICINITY MAP
N.T.S.

Sheet List Table		
Sheet Number	Sheet Title	
A-1	TITLE SHEET	
A-2	STRUCTURAL NOTES	
A-2A	GENERAL AND EROSION NOTES	
A-3	SUMMARY OF PAY ITEMS	
A-4	GATEWAY AERIAL MAP	
A-5	EXISTING CONDITIONS PLAN	1 OF 3
A-6	EXISTING CONDITIONS PLAN	2 OF 3
A-7	EXISTING CONDITIONS PLAN	3 OF 3
B-1	SITE PLAN AND HORIZONTAL CONTROL PLAN	1 OF 2
B-2	SITE PLAN AND HORIZONTAL CONTROL PLAN	2 OF 2
B-3	PILE LOCATIONS	1 OF 6
B-4	PILE LOCATIONS	2 OF 6
B-5	PILE LOCATIONS	3 OF 6
B-6	PILE LOCATIONS	4 OF 6
B-7	PILE LOCATIONS	5 OF 6
B-8	PILE LOCATIONS	6 OF 6
B-9	MULTI-PURPOSE STRUCTURES PLAN	1 OF 6
B-10	MULTI-PURPOSE STRUCTURES PLAN	2 OF 6
B-11	MULTI-PURPOSE STRUCTURES PLAN	3 OF 6
B-12	MULTI-PURPOSE STRUCTURES PLAN	4 OF 6
B-13	MULTI-PURPOSE STRUCTURES PLAN	5 OF 6
B-14	MULTI-PURPOSE STRUCTURES PLAN	6 OF 6
B-14A	MULTI-PURPOSE STRUCTURES SECTIONS AND DETAILS	
B-15	MULTI-PURPOSE STRUCTURE DETAILS	
B-16	END BENT LAYOUT	
B-17	END BENT DETAILS	
B-18	ABUTMENT LAYOUT	
B-19	ABUTMENT DETAILS	
B-20	U-BRIDGE	
B-21	BEST MANAGEMENT PRACTICES PLAN	1 OF 2
B-22	BEST MANAGEMENT PRACTICES PLAN	2 OF 2
B-23	MAINTENANCE OF TRAFFIC PLAN	
B-24	ENVIROMENTAL SIGNAGE PLAN	
L-1	LIGHTING PLAN	1 OF 2
L-2	LIGHTING PLAN	2 OF 2

GOVERNING STANDARDS AND SPECIFICATIONS: FLORIDA DEPARTMENT OF TRANSPORTATION, DESIGN STANDARDS, DATED 2016, AND APPLICABLE SECTIONS, ARTICLES AND SUBARTICLES OF DIVISION I AND ALL DIVISION II & III OF THE FLORIDA DEPARTMENT OF TRANSPORTATION JULY 2016, STANDARD SPECIFICATIONS FOR ROAD AND BRIDGE CONSTRUCTION, AS AMENDED BY CONTRACT DOCUMENTS.

FOR DESIGN STANDARDS CLICK ON THE "DESIGN STANDARDS" LINK
AT THE FOLLOWING WEB SITE: http://www.dot.state.fl.us/rddesign/

FOR THE STANDARDS SPECIFICATIONS FOR ROAD AND BRIDGE CONSTRUCTION
CLICK ON THE "STANDARD SPECIFICATIONS" LINK
AT THE FOLLOWING WEB SITE: http://www.dot.state.fl.us/programmanagement/

PREPARED BY
Kimley»Horn

© 2014 KIMLEY-HORN AND ASSOCIATES, INC.

1777 MAIN STREET, SUITE 200, SARASOTA, FL 34236
PHONE: 941-379-7600
WWW.KIMLEY-HORN.COM CA 00000696

NOT FOR CONSTRUCTION

PETER VAN BUSKIRK, P.E.
STATE OF FLORIDA,
PROFESSIONAL ENGINEER,
LICENSE NO. 38859
THIS ITEM HAS BEEN
ELECTRONICALLY SIGNED AND SEALED
BY PETER VAN BUSKIRK, P.E.
ON 11/11/ 2016 USING A SHA-1 AUTHENTICATION CODE.

PRINTED COPIES OF THIS DOCUMENT ARE NOT CONSIDERED SIGNED AND SEALED AND THE SHA-1 AUTHENTICATION CODE MUST BE VERIFIED ON ANY ELECTRONIC COPIES

This document, together with the concepts and designs presented herein, as an instrument of service, is intended only for the specific purpose and client for which it was prepared. Reuse of and improper reliance on this document without written authorization and adaptation by Kimley-Horn and Associates, Inc. shall be without liability to Kimley-Horn and Associates, Inc.

DESIGN SPECIFICATIONS:

FLORIDA DEPARTMENT OF TRANSPORTATION FDOT STRUCTURES MANUAL, JANUARY 2015 STRUCTURES.

AASHTO LRFD BRIDGE DESIGN SPECIFICATIONS, 7TH EDITION,

AASHTO LRFD GUIDE SPECIFICATIONS FOR THE DESIGN OF PEDESTRIAN BRIDGES, DECEMBER 2009 WITH 2015 INTERIM.

VERTICAL DATUM:

VERTICAL DATUM USED IS NGVD 29.

DESIGN METHOD:

LOAD AND RESISTANCE FACTOR DESIGN (LRFD) USING STRENGTH AND SERVICE LIMIT STATES.

DESIGN LOADING:

DEAD LOADS:

UNIT WEIGHT OF REINFORCED CONCRETE (INCLUDING REINFORCEMENT): 150 PCF

ALUMINUM PEDESTRIAN HAND RAILING (U-BRIDGE): 30 PLF

LIVE LOADS:

PEDESTRIAN BRIDGE: 90 PSF

UTILITIES:
NO ALLOWANCE FOR UTILITY LOADS HAS BEEN INCLUDED IN THE DESGN

WIND LOADS:

WIND LOADS ARE IN ACCORDANCE WITH FDOT STRUCTURES MANUAL, VOLUME 1 – STRUCTURES DESIGN GUIDELINES, SECTION 10.5 FOR A WIND PRESSURE OF 50 PSF.

WATER LOADS:

WAVE LOADS ARE BASED ON 75 MPH WIND DRIVEN WAVES WITH A HEIGHT OF 7.3'

EARTHQUAKE LOADS:

EARTHQUAKE PROVISIONS ARE IN ACCORDANCE WITH FDOT STRUCTURES MANUAL, VOLUME 1- STRUCTURES DESIGN GUIDELINES, SECTION 2.3

TEMPERATURE EFFECTS:

STRUCTURAL MATERIAL	TEMPERATURE (°F)			
	MEAN	HIGH	LOW	RANGE
Concrete Only	70	105	35	70

COEFFICIENT OF THERMAL EXPANSION: 0.0000060 PER °F (CONCRETE)

FUNDAMENTAL FREQUENCY OF PEDESTRIAN BRIDGE
THE FIRST MODE OF FUNDAMENTAL FREQUENCY LIMIT WITHOUT LIVE LOAD IS 3.00 HERTZ VERTICALLY AND 1.3 HERTZ LATERALLY PER AASHTO LRFD GUIDE SPECIFICATIONS FOR THE DESIGN OF PEDESTRIAN BRIDGES.

PLAN DIMENSIONS:

ALL DIMENSIONS IN THESE PLANS ARE MEASURED IN FEET EITHER HORIZONTALLY OR VERTICALLY UNLESS OTHERWISE NOTED.

ENVIRONMENT:

SUPERSTRUCTURE – EXTREMELY AGGRESSIVE (OVER OR IN SALT WATER)
SUBSTRUCTURE – EXTREMELY AGGRESSIVE (OVER OR IN SALT WATER)

MATERIALS:

CONCRETE:

CLASS	LOCATION IN STRUCTURE	MINIMUM 28 DAY COMPRESSION STRENGTH (PSI)
II	PRECAST END BENTS, SIDEWALKS & TRAFFIC RAILINGS	3,400
IV*	CIP END BENTS & ABUTMENTS, PRECAST BEAMS, PRECAST DECK	5,500
VI*	PRESTRESSED U-BEAM	8,500
V* (SPECIAL)	PRESTRESSED PILES	6,000

NOTE:
* CLASS IV, V (SPECIAL), AND VI CONCRETE WITH TYPE II (MH) CEMENT AND WITH SILICA FUME, METAKAOLIN OR ULTRAFINE FLY ASH MEETING THE REQUIREMENTS OF SECTION 346 OF THE FDOT SPECIFICATIONS.

CONCRETE SHALL BE IN ACCORDANCE WITH FDOT SPECIFICATION SECTION 346.

REINFORCING STEEL:
ALL REINFORCING STEEL SHALL CONFORM TO ASTM A615, GRADE 60 UNLESS NOTED OTHERWISE. ALL DIMENSIONS PERTAINING TO LOCATION OF REINFORCEMENT ARE TO CENTERLINE OF BARS EXCEPT WHERE THE CLEAR DIMENSION IS SHOWN TO THE FACE OF CONCRETE OR OTHER SURFACES.

PRESTRESSING STRANDS:
STRANDS SHALL MEET THE REQUIREMENTS OF ASTM A416, GRADE 270, LOW-RELAXATION.

CONCRETE COVER:

UNLESS NOTED OTHERWISE, CONCRETE COVER SHALL CONFORM TO THE FOLLOWING:

PRECAST U-BEAM, PRECAST BEAMS, PRECAST DECK	2"
SUBSTRUCTURE (CAST-IN-PLACE) – ALL BRIDGES	
END BENT CAPS CAST AGAINST EARTH/ SURFACES IN CONTACT WITH WATER	4.5"
END BENT CAPS FORMED SURFACES NOT IN CONTACT WITH WATER	4"

NOTE:
CONCRETE COVERS SHOWN IN THE PLANS DO NOT INCLUDE PLACEMENT AND FABRICATION TOLERANCES UNLESS SHOWN AS "MINIMUM COVER". SEE FDOT SPECIFICATIONS SECTION 415 FOR ALLOWABLE TOLERANCES. ALL DIMENSIONS PERTAINING TO THE LOCATION OF REINFORCING STEEL ARE TO CENTERLINE OF BAR EXCEPT WHERE CLEAR DIMENSION IS NOTED TO FACE OF CONCRETE.

CONSTRUCTION JOINTS IN CONCRETE:

CONSTRUCTION JOINTS WILL BE PERMITTED ONLY AT LOCATIONS INDICATED ON THE PLANS. ADDITIONAL CONSTRUCTION JOINTS OR ALTERATIONS TO THOSE SHOWN SHALL REQUIRE WRITTEN APPROVAL OF THE ENGINEER.

CONCRETE FINISHES:

A CLASS 5 FINISH SHALL BE APPLIED TO ALL EXPOSED SURFACES OF THE PEDESTRIAN BRIDGE AS INDICATED ON THE SKETCH BELOW IN ACCORDANCE WITH FDOT SECTION 975. COLOR SHALL BE DETERMINED BY THE CHARLOTTE HARBOR COMMUNITY DEVELOPMENT AGENCY.

PRECAST CONCRETE BOARDWALK:

1. PRECAST CONCRETE BOARDWALK SUPERSTRUCTURE, SUBSTRUCTURE, CONNECTIONS, ANCHOR BOLTS, AND BEARING PADS SHALL BE DESIGNED BY THE DELEGATE ENGINEER BASED UPON THE SPECIFIED DESIGN IN THE CONTRACT DOCUMENT. THE PRECAST CONCRETE BOARDWALK PLANS AND CALCULATIONS SHALL BE SIGNED AND SEALED BY A PROFESSIONAL ENGINEER LICENSED IN THE STATE OF FLORIDA. PLANS AND CALCULATIONS SHALL BE SUBMITTED FOR REVIEW AND APPROVAL BY THE PROJECT ENGINEER. THE PRECAST CONCRETE BOARDWALK PLANS CALCULATION SHALL INCLUDE A SUMMARY OF PILE REACTIONS. PRECAST CONCRETE BOARDWALK FABRICATION SHALL NOT BEGIN UNTIL ALL APPROVALS HAVE BEEN RECEIVED.

2. THE BOARDWALK CLEAR PATH WIDTH SHALL BE AS INDICATED ON THE PLAN AND SHALL BE MEASURED BETWEEN THE INSIDE FACES OF RAILING ELEMENTS.

3. PEDESTRIAN RAILING SHALL BE A MINIMUM 3'-6" ABOVE THE TOP OF BOARDWALK DECK.

4. THE MINIMUM COMPRESSIVE STRENGTH AND CLASS OF CONCRETE SHALL BE AS INDICATED IN THE MATERIAL SECTION OF THIS SHEET.

5. CONNECTIONS FOR THE PRECAST CONCRETE BOARDWALK SHALL BE DESIGNED FOR THE APPROPRIATE LATERAL AND UPLIFT FORCES AS DETERMINED FOLLOWING THE SPECIFIED DESIGN CRITERIA IN THESE CONTRACT DOCUMENTS.

6. ALL FASTENERS, CONNECTORS AND BOLTS SHALL BE STAINLESS STEEL TYPE 304 IN ACCORDANCE WITH ASTM A276 AND CONFORM TO ASTM A325, WITH NUTS CONFORMING TO ASTM A594 AND WASHERS CONFORMING TO ASTM F436, UNLESS NOTED OTHERWISE.

ABBREVIATIONS:
PC- PRECAST
PEJM- PREMOLDED EXPANSION JOINT MATERIAL
PS- PRESTRESSED
UON- UNLESS OTHERWISE NOTED

NOTE: FOR STANDARD ABBREVIATIONS, SEE FDOT STANDARD INDEX 001

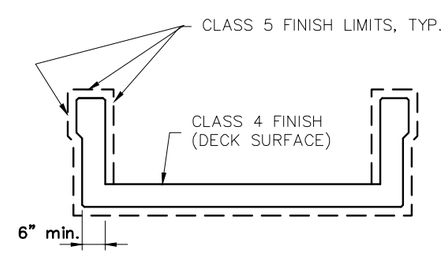

PEDESTRIAN BRIDGE
FINISH DETAIL

THE PRESENCE OF GROUNDWATER SHOULD BE ANTICIPATED ON THIS PROJECT. CONTRACTOR'S BID SHALL INCLUDE CONSIDERATION FOR ADDRESSING THIS ISSUE.

CALL 48 HOURS BEFORE YOU DIG
IT'S THE LAW! DIAL 811
811 Know what's below. Call before you dig.
SUNSHINE STATE ONE CALL OF FLORIDA, INC.

No.	REVISIONS	DATE	BY
1	ADJUST NOTES	11/24/15	

Kimley»Horn
© 2014 KIMLEY-HORN AND ASSOCIATES, INC.
1777 MAIN STREET, SUITE 200, SARASOTA, FL 34236
PHONE: 941-379-7600
WWW.KIMLEY-HORN.COM CA 00000696

LICENSED PROFESSIONAL
PETER VAN BUSKIRK, P.E.
STATE OF FLORIDA
PROFESSIONAL ENGINEER
LICENSE NO. 76899
THIS ITEM HAS BEEN ELECTRONICALLY SIGNED AND SEALED BY PETER VAN BUSKIRK
ON 11/17/2015 USING A SHA-1 AUTHENTICATION CODE.
PRINTED COPIES OF THIS DOCUMENT ARE NOT CONSIDERED SIGNED AND SEALED AND THE SHA-1 AUTHENTICATION CODE MUST BE VERIFIED ON ANY ELECTRONIC COPIES

KHA PROJECT 048392.009
DATE OCT., 2014
SCALE AS SHOWN
DESIGNED BY KHA
DRAWN BY KHA
CHECKED BY KHA

STRUCTURAL NOTES

HARBOR WALK PHASE 1B
PREPARED FOR
CHARLOTTE HARBOR COMMUNITY DEVELOPMENT AGENCY
CHARLOTTE COUNTY FLORIDA

SHEET NUMBER
A-2
100% PLANS

Plotted By:Kenny, Christian Sheet Set:Harbor Walk-PH-1B Layout:A-2 November 11, 2015 12:32:32pm K:\SAR_Civil\048392.009\CIVIL\CAD-Phase-1B\PlanSheets\A-2 STRUCTURAL GENERAL NOTES.dwg
This document, together with the concepts and designs presented herein, as an instrument of service, is intended only for the specific purpose and client for which it was prepared. Reuse of and improper reliance on this document without written authorization and adaptation by Kimley-Horn and Associates, Inc. shall be without liability to Kimley-Horn and Associates, Inc.

GENERAL CONSTRUCTION NOTES

1. EXISTING UTILITIES SHOWN ARE LOCATED ACCORDING TO THE INFORMATION AVAILABLE TO THE ENGINEER AT THE TIME OF THE TOPOGRAPHIC SURVEY AND HAVE NOT BEEN INDEPENDENTLY VERIFIED BY THE ENGINEER. GUARANTEE IS NOT MADE THAT ALL EXISTING UNDERGROUND UTILITIES ARE SHOWN OR THAT THE LOCATION OF THOSE SHOWN ARE ENTIRELY ACCURATE. FINDING THE ACTUAL LOCATION OF ANY EXISTING UTILITIES IS THE CONTRACTOR'S RESPONSIBILITY AND SHALL BE DONE BEFORE HE COMMENCES ANY WORK IN THE VICINITY.

2. IT IS THE CONTRACTOR'S RESPONSIBILITY TO CONTACT THE VARIOUS UTILITY COMPANIES WHICH MAY HAVE BURIED OR AERIAL UTILITIES WITHIN OR NEAR THE CONSTRUCTION AREA BEFORE COMMENCING WORK. THE CONTRACTOR SHALL PROVIDE 48 HOURS MINIMUM NOTICE TO ALL UTILITY COMPANIES PRIOR TO BEGINNING CONSTRUCTION. A LIST OF THE UTILITY COMPANIES WHICH THE CONTRACTOR MUST CALL BEFORE COMMENCING WORK IS PROVIDED ON THE COVER SHEET OF THESE CONSTRUCTION PLANS. THIS LIST SERVES AS A GUIDE ONLY AND IS NOT INTENDED TO LIMIT THE UTILITY COMPANIES WHICH THE CONTRACTOR MAY WISH TO NOTIFY.

3. ANY DISCREPANCIES ON THE DRAWINGS SHALL BE IMMEDIATELY BROUGHT TO THE ATTENTION OF THE ENGINEER BEFORE COMMENCING WORK. NO FIELD CHANGES OR DEVIATIONS FROM DESIGN ARE TO BE MADE WITHOUT PRIOR APPROVAL OF THE ENGINEER.

4. ALL COPIES OF COMPACTION, CONCRETE AND OTHER REQUIRED TEST RESULTS ARE TO BE SENT TO THE ENGINEER OF RECORD DIRECTLY FROM THE TESTING AGENCY.

5. THE CONTRACTOR SHALL BE RESPONSIBLE FOR SUBMITTING TO THE ENGINEER A CERTIFIED RECORD SURVEY SIGNED AND SEALED BY A PROFESSIONAL LAND SURVEYOR REGISTERED IN THE STATE OF FLORIDA DEPICTING THE ACTUAL FIELD LOCATION OF ALL CONSTRUCTED IMPROVEMENTS THAT ARE REQUIRED BY THE JURISDICTIONAL AGENCIES FOR THE CERTIFICATION PROCESS. ALL SURVEY COSTS WILL BE THE CONTRACTORS RESPONSIBILITY.

6. THE CONTRACTOR SHALL BE RESPONSIBLE FOR DOCUMENTING AND MAINTAINING AS-BUILT INFORMATION WHICH SHALL BE RECORDED AS CONSTRUCTION PROGRESSES OR AT THE COMPLETION OF APPROPRIATE CONSTRUCTION INTERVALS AND SHALL BE RESPONSIBLE FOR PROVIDING AS-BUILT DRAWINGS TO THE ENGINEER FOR THE PURPOSE OF CERTIFICATION TO JURISDICTIONAL AGENCIES AS REQUIRED. ALL AS-BUILT DATA SHALL BE COLLECTED BY A STATE OF FLORIDA LICENSED PROFESSIONAL LAND SURVEYOR WHOSE SERVICES ARE ENGAGED BY THE CONTRACTOR.

7. ANY WELLS DISCOVERED ON SITE THAT WILL HAVE NO USE MUST BE PLUGGED BY A LICENSED WELL DRILLING CONTRACTOR IN A MANNER APPROVED BY ALL JURISDICTIONAL AGENCIES. CONTRACTOR SHALL BE RESPONSIBLE FOR OBTAINING ANY WELL ABANDONMENT PERMITS REQUIRED.

8. ANY WELL DISCOVERED DURING EARTH MOVING OR EXCAVATION SHALL BE REPORTED TO THE APPROPRIATE JURISDICTIONAL AGENCIES WITHIN 24 HOURS AFTER DISCOVERY IS MADE.

9. THE CONTRACTOR SHALL BE RESPONSIBLE FOR VERIFYING THAT THE PROPOSED IMPROVEMENTS SHOWN ON THE PLANS DO NOT CONFLICT WITH ANY KNOWN EXISTING OR OTHER PROPOSED IMPROVEMENTS. IF ANY CONFLICTS ARE DISCOVERED, THE CONTRACTOR SHALL NOTIFY THE ENGINEER PRIOR TO INSTALLATION OF ANY PORTION OF THE SITE WORK THAT WOULD BE AFFECTED. FAILURE TO NOTIFY ENGINEER OF AN IDENTIFIABLE CONFLICT PRIOR TO PROCEEDING WITH INSTALLATION RELIEVES ENGINEER IN CONJUNCTION WITH THE OWNER OF ANY OBLIGATION TO PAY FOR A RELATED CHANGE ORDER.

10. ALL FACILITIES SHALL BE CONSTRUCTED TO MEET THE LATEST ADA REQUIREMENTS.

11. AT LEAST 72 HOURS IN ADVANCE OF BEGINNING CONSTRUCTION OF THE PROJECT, THE CONTRACTOR SHALL CONTACT THE LOCAL MAINTENANCE FDOT ENGINEER'S OFFICE TO SECURE GENERAL USE PERMITS AND/OR OTHER PERMITS AS REQUIRED FOR WORKING WITHIN THE DEPARTMENT'S RIGHT-OF-WAY.

12. PRIOR TO ANY INTRUSIVE WORK (DRILLING, CUTTING, BREAKING, ETC.) ON THE EXISTING BRIDGE STRUCTURE AN ASBESTOS SURVEY SHALL BE PERFORMED ON THE IMPACTED BRIDGE COMPONENTS. SURVEY RESULTS SHALL BE PROVIDED TO THE ENGINEER PRIOR BEGINNING THE INTRUSIVE WORK.

13. CONSTACTOR IS RESPONSIBLE FOR RESTORATION OF ANY DAMAGED OR DEFORMED SURFACE, UTILITIES AND LANDSCAPING WITHIN THE LIVE OAK PARK PROJECT CAUSED BY CONTRACTORS WORK.

MAINTENANCE

ALL MEASURES STATED ON THE EROSION AND SEDIMENT CONTROL PLAN, AND IN THE STORM WATER POLLUTION PREVENTION PLAN, SHALL BE MAINTAINED IN FULLY FUNCTIONAL CONDITION UNTIL NO LONGER REQUIRED FOR A COMPLETED PHASE OF WORK OR FINAL STABILIZATION OF THE SITE. ALL EROSION AND SEDIMENTATION CONTROL MEASURES SHALL BE CHECKED BY A QUALIFIED PERSON AT LEAST ONCE EVERY SEVEN CALENDAR DAYS AND WITHIN 24 HOURS OF THE END OF A 0.5" RAINFALL EVENT, AND CLEANED AND REPAIRED IN ACCORDANCE WITH THE FOLLOWING:

1. INLET PROTECTION DEVICES AND BARRIERS SHALL BE REPAIRED OR REPLACED IF THEY SHOW SIGNS OF UNDERMINING, OR DETERIORATION.

2. ALL SEEDED AREAS SHALL BE CHECKED REGULARLY TO SEE THAT A GOOD STAND IS MAINTAINED. AREAS SHOULD BE FERTILIZED, WATERED AND RESEEDED AS NEEDED. FOR MAINTENANCE REQUIREMENTS REFER TO SECTION 981 OF THE STANDARD SPECIFICATIONS.

3. SILT FENCES SHALL BE REPAIRED TO THEIR ORIGINAL CONDITIONS IF DAMAGED. SEDIMENT SHALL BE REMOVED FROM THE SILT FENCES WHEN IT REACHES ONE-HALF THE HEIGHT OF THE SILT FENCE.

4. THE CONSTRUCTION ENTRANCES SHALL BE MAINTAINED IN A CONDITION WHICH WILL PREVENT TRACKING OR FLOW OF MUD ONTO PUBLIC RIGHTS-OF-WAY. THIS MAY REQUIRE PERIODIC TOP DRESSING OF THE CONSTRUCTION ENTRANCES AS CONDITIONS DEMAND.

5. THE TEMPORARY PARKING AND STORAGE AREA SHALL BE KEPT IN GOOD CONDITION (SUITABLE FOR PARKING AND STORAGE). THIS MAY REQUIRE PERIODIC TOP DRESSING OF THE TEMPORARY PARKING AS CONDITIONS DEMAND.

6. OUTLET STRUCTURES IN THE SEDIMENTATION BASINS SHALL BE MAINTAINED IN OPERATIONAL CONDITIONS AT ALL TIMES. SEDIMENT SHALL BE REMOVED FROM SEDIMENT BASINS OR TRAPS WHEN THE DESIGN CAPACITY HAS BEEN REDUCED BY 55 CUBIC YARDS / ACRE. ALL SEDIMENT SHALL BE REMOVED FROM THE STORMWATER RETENTION AREA AND BOTTOM SURFACE SCARAFIED PRIOR TO PLACEMENT OF FINAL SOD.

7. ALL MAINTENANCE OPERATIONS SHALL BE DONE IN A TIMELY MANNER BUT IN NO CASE LATER THAN 2 CALENDAR DAYS FOLLOWING THE INSPECTION.

8. CONTRACTOR SHALL KEEP THE SITE CLEAN OF TRASH AND DEBRIS. APPROPRIATE TRASH CONTAINMENT SHALL BE PROVIDED ONSITE AT ALL TIMES. CONTRACTOR SHALL BE RESPONSIBLE FOR MAINTENANCE AND MOWING OF SODDED AREAS UNTIL ACCEPTANCE BY THE ENGINEER.

9. CONTRACTOR SHALL USE CAUTION WHEN WORKING IN AND AROUND THE EXISTING LANDSCAPE AREAS AND CHARLOTTE HARBOR WELCOME SIGN. THE EXISTING IRRIGATION SYSTEM AND SIGNAGE LIGHTING SHALL BE KEPT IN WORKING ORDER DURING CONSTRUCTION. CONTRACTOR SHALL NOTIFY CHARLOTTE COUNTY PROJECT MANAGER 48 HOURS IN ADVANCE OF WORK IN LANDSCAPE AREAS TO RELOCATE IMPACTED PLANTINGS.

MAINTENANCE OF TRAFFIC

1. TRAFFIC SHALL BE MAINTAINED IN ACCORDANCE WITH FDOT INDEX 601.

THE PRESENCE OF GROUNDWATER SHOULD BE ANTICIPATED ON THIS PROJECT. CONTRACTOR'S BID SHALL INCLUDE CONSIDERATION FOR ADDRESSING THIS ISSUE.

CALL 48 HOURS BEFORE YOU DIG

IT'S THE LAW! DIAL 811

811 Know what's below. Call before you dig.

SUNSHINE STATE ONE CALL OF FLORIDA, INC.

No.	REVISIONS	DATE	BY
1	ADJUST NOTES	11/24/15	

Kimley»Horn

© 2014 KIMLEY-HORN AND ASSOCIATES, INC.
1777 MAIN STREET, SUITE 200, SARASOTA, FL 34236
PHONE: 941-379-7600
WWW.KIMLEY-HORN.COM CA 00000696

LICENSED PROFESSIONAL
PETER VAN BUSKIRK, P.E.
STATE OF FLORIDA
PROFESSIONAL ENGINEER
LICENSE NO. 76899
THIS ITEM HAS BEEN ELECTRONICALLY SIGNED AND SEALED
BY PETER VAN BUSKIRK
ON 11/17/2015 USING A SHA-1 AUTHENTICATION CODE.
PRINTED COPIES OF THIS DOCUMENT ARE NOT CONSIDERED SIGNED AND SEALED AND THE SHA-1 AUTHENTICATION CODE MUST BE VERIFIED ON ANY ELECTRONIC COPIES

KHA PROJECT 048392.009
DATE OCT., 2014
SCALE AS SHOWN
DESIGNED BY KHA
DRAWN BY KHA
CHECKED BY KHA

GENERAL AND EROSION NOTES

HARBOR WALK PHASE 1B
PREPARED FOR
CHARLOTTE HARBOR COMMUNITY DEVELOPMENT AGENCY
CHARLOTTE COUNTY FLORIDA

SHEET NUMBER
A-2A
100% PLANS

Plotted By:Harvey, Christian Sheet Set:HarborWalk-Ph1-1B Layout:A-2A November 11, 2016 12:32:47pm K:\SAS_Civil\048392.009\CIVIL\CAD-Phase-1B\PlanSheets\A-2A GENERAL EROSION NOTES.dwg
This document, together with the concepts and designs presented herein, as an instrument of service, is intended only for the specific purpose and client for which it was prepared. Reuse of and improper reliance on this document without written authorization and adaptation by Kimley-Horn and Associates, Inc. shall be without liability to Kimley-Horn and Associates, Inc.

SUMMARY OF PAY ITEMS			
GATEWAY HARBOR WALK PROJECT PHASE 1B			
ITEM	DESCRIPTION	UNITS	ESTIMATED QUANTITY
101 1	MOBILIZATION	LS	1
102 1	MOT	LS	1
104 10 3	SEDIMENT BARRIER	LF	593
104 11	FLOATING TURBIDITY BARRIER (NOTE 1)	LF	100
110 11	CLEARING AND GRUBBING (NOTE 2)	AC	0.30
455 34 2	PRESTRESSED CONCRETE PILING, 14" SQ.	LF	5904
455 143 22	TEST PILES - PRESTRESSED CONCRETE, 14" SQ.	LF	700
515 2 311	PEDESTRIAN/BICYCLE RAILING TYPE 1	LF	20
522 1	CONCRETE SIDEWALK, 4" THICK	SY	26
530 3 3	RIPRAP-BUBBLE, BANK AND SHORE	TN	20
530 3 4	RIPRAP-BUBBLE, F&I, DITCH LINING	TN	10
570 1 3	PERFORMANCE TURF	SY	100
700 1 11	SINGLE POST SIGN, F&I, LESS THAN 12 SF	EA	6
721 74 1	TRASH RECEPTACLE, PRE-FABRICATED WITH COVER AND CASE	EA	10
Custom 1	PRECAST PLANK AND BEAM BOARDWALK SYSTEM (NO RAILING) (NOTE 3)	SF	15063
Custom 2	WOODEN RAILING SYSTEM, F&I (NOTE 4)	LF	2593
Water Taxi Pier			
455 2 1	8" DIA. PT WOOD PILING, F&I	LF	120
455 34 2	PRESTRESSED CONCRETE PILING, 14" SQ.	LF	588
455 143 22	TEST PILES - PRESTRESSED CONCRETE, 14" SQ.	LF	100
Custom 1	PRECAST PLANK AND BEAM BOARDWALK SYSTEM (NO RAILING) (NOTE 3)	SF	1197
Custom 2	WOOD RAILING SYSTEM, F&I (NOTE 4)	LF	210
Custom 3	10" GALVANIZED CLEAT, F&I	EA	8
Custom 4	8" DIA PLASTIC PILE CAP, F&I	EA	4
Fishing Pier			
455 34 2	PRESTRESSED CONCRETE PILING, 14" SQ.	LF	672
455 143 22	TEST PILES - PRESTRESSED CONCRETE, 14" SQ.	LF	100
Custom 1	PRECAST PLANK AND BEAM BOARDWALK SYSTEM (NO RAILING) (NOTE 3)	SF	1411
Custom 2	WOOD RAILING SYSTEM, F&I (NOTE 4)	LF	248
U-Bridge 1 Substructure			
455 34 3	PRESTRESSED CONCRETE PILING, 18" SQ	LF	90
455 143 23	TEST PILES - PRESTRESSED CONCRETE, 18" SQ.	LF	100
400 2 5	CONC CLASS II, SUBSTRUCTURE	CY	7
415 1 5	REINF STEEL- SUBSTRUCTURE	LB	1050
U-Bridge 1 Superstructure			
Custom 5	PRESTRESSED CONCTRETE U-BRIDGE 1	EA	1
Custom 2	WOOD RAILING SYSTEM, F&I (NOTE 4)	LF	139
400 147	COMPOSITE NEOPRENE PADS	CF	1
Custom 6	SHIPPING AND ERECTION OF BRIDGE 1 (NOTE 5)	LS	1

SUMMARY OF PAY ITEMS			
GATEWAY HARBOR WALK PROJECT PHASE 1B			
ITEM	DESCRIPTION	UNITS	ESTIMATED QUANTITY
U-Bridge 2 Substructure			
455 34 3	PRESTRESSED CONCRETE PILING, 18" SQ	LF	90
455 143 23	TEST PILES - PRESTRESSED CONCRETE, 18" SQ.	LF	100
400 2 5	CONC CLASS II, SUBSTRUCTURE	CY	7
415 1 5	REINF STEEL- SUBSTRUCTURE	LB	1050
U-Bridge 2 Superstructure			
Custom 7	PRESTRESSED CONCTRETE U-BRIDGE 2	EA	1
Custom 3	WOOD RAILING SYSTEM	LF	118
400 147	COMPOSITE NEOPRENE PADS	CF	1
Custom 8	SHIPPING AND ERECTION OF BRIDGE 2 (NOTE 5)	LS	1
Lighting			
630 2 11	CONDUIT F&I, OPEN TRENCH	LF	110
630 2 15	CONDUIT F&I, BRIDGE MOUNT	LF	400
715 1 11	LIGHTING CONDUCTORS,F&I,INSUL, NO.10 OR<	LF	450
715 1 12	LIGHTING CONDUCTORS, F&I, INSUL,NO.8-6	LF	100
715 11 119	LUMINARE F&I SPECIAL, POST MOUNT (NOTE 6)	EA	34
Custom 9	LOW VOLTAGE TRANSFORMER, F&I	EA	2
Alternates			
ALT-1	42" STAINLESS STEEL CABLE RAILING WITH INTEGRAL LIGHT ON TOP RAIL, F&I (COST INCLUDES ALL LIGHTING SYSTEM REQUIREMENTS INCLUDING TRANSFORMERS, CONDUIT, CONDUCTORS, CONNECTION TO POWER SOURCE AND ALL MOUNTING HARDWARE.)	LF	2593
ALT-2	18" STAINLESS STEEL CABLE RAILING WITH INTEGRAL LIGHT ON TOP RAIL, F&I (COST INCLUDES ALL LIGHTING SYSTEM REQUIREMENTS INCLUDING TRANSFORMERS, CONDUIT, CONDUCTORS, CONNECTION TO POWER SOURCE AND ALL MOUNTING HARDWARE.)	LF	258

NOTES:

1. IT IS ANTICIPATED THAT AMOUNT OF THE FLOATING TURBIDITY BARRIER WILL BE RELOCATED ALONG WITH THE PILE DRIVING ACTIVITIES.
2. CLEARING AND GRUBBING INCLUDES REMOVAL OF PICKET RAILING, CONCRETE, AND STEEL OBSTRUCTIONS IN THE U-BRIDGE AREAS AND WHERE NOTED.
3. PRECAST PLANK AND BEAM BOARDWALK INCLUDES ALL PRECAST CONCRETE PILE CAPS, PRECAST CONCRETE BEAMS, PRECAST CONCRETE PLANKS, AND ALL TIE DOWN HARDWARE.
4. WOOD RAILING INCLUDES ALL HARDWARE AND CONNECTORS TO INSTALL.
5. COST TO INCLUDE CLASS 5 FINISH.
6. COST TO INCLUDE ALL HARDWARE REQUIRED TO INSTALL WATER PROOF LIGHT FIXTURE.

No.	REVISIONS	DATE	BY
1	ADD NOTE	11/24/15	

Kimley»Horn
© 2014 KIMLEY-HORN AND ASSOCIATES, INC.
1777 MAIN STREET, SUITE 200, SARASOTA, FL 34236
PHONE: 941-379-7600
WWW.KIMLEY-HORN.COM CA 00000696

LICENSED PROFESSIONAL
PETER VAN BUSKIRK, P.E.
STATE OF FLORIDA
PROFESSIONAL ENGINEER
LICENSE NO. 39899
THIS ITEM HAS BEEN ELECTRONICALLY SIGNED AND SEALED BY PETER VAN BUSKIRK ON 11/17/2016 USING A SHA-1 AUTHENTICATION CODE.
PRINTED COPIES OF THIS DOCUMENT ARE NOT CONSIDERED SIGNED AND SEALED AND THE SHA-1 AUTHENTICATION CODE MUST BE VERIFIED ON ANY ELECTRONIC COPIES

KHA PROJECT 048392.009
DATE OCT., 2014
SCALE AS SHOWN
DESIGNED BY KHA
DRAWN BY KHA
CHECKED BY KHA

SUMMARY OF PAY ITEMS

HARBOR WALK PHASE 1B
PREPARED FOR
CHARLOTTE HARBOR COMMUNITY DEVELOPMENT AGENCY
CHARLOTTE COUNTY FLORIDA

SHEET NUMBER
A-3
100% PLANS

Plotted By:Harvey, Christian Sheet Set:HarborWalk-PH-1B Layout:A-3 November 11, 2016 12:33:02pm K:\SAR_Civil\048392.009\CIVIL\CAD-Phase-1B\PlanSheets\A-3 SUMMARY OF PAY ITEMS.dwg
This document, together with the concepts and designs presented herein, as an instrument of service, is intended only for the specific purpose and client for which it was prepared. Reuse of and improper reliance on this document without written authorization and adaptation by Kimley-Horn and Associates, Inc. shall be without liability to Kimley-Horn and Associates, Inc.

Plotted By:Harvey, Christian Sheet Set:HarborWalk-PH-1B Layout:A-4 November 11, 2016 12:33:39pm K:\SAR_Civil\048392.009\CIVIL\CAD-Phase-1B\PlanSheets\A-4 GATEWAY AERIAL MAP.dwg
This document, together with the concepts and designs presented herein, as an instrument of service, is intended only for the specific purpose and client for which it was prepared. Reuse of and improper reliance on this document without written authorization and adaptation by Kimley-Horn and Associates, Inc. shall be without liability to Kimley-Horn and Associates, Inc.

SHEET NUMBER A-4 100% PLANS	HARBOR WALK PHASE 1B PREPARED FOR CHARLOTTE HARBOR COMMUNITY DEVELOPMENT AGENCY CHARLOTTE COUNTY FLORIDA	GATEWAY AERIAL MAP	KHA PROJECT 048392.009 DATE OCT., 2014 SCALE AS SHOWN DESIGNED BY KHA DRAWN BY KHA CHECKED BY KHA	LICENSED PROFESSIONAL PETER VAN BUSKIRK, P.E. STATE OF FLORIDA, PROFESSIONAL ENGINEER, LICENSE NO. 38659 THIS ITEM HAS BEEN ELECTRONICALLY SIGNED AND SEALED BY PETER VAN BUSKIRK ON 11/11/2016 USING A SHA-1 AUTHENTICATION CODE. PRINTED COPIES OF THIS DOCUMENT ARE NOT CONSIDERED SIGNED AND SEALED AND THE SHA-1 AUTHENTICATION CODE MUST BE VERIFIED ON ANY ELECTRONIC COPIES	Kimley»Horn © 2014 KIMLEY-HORN AND ASSOCIATES, INC. 1777 MAIN STREET, SUITE 200, SARASOTA, FL 34236 PHONE: 941-379-7600 WWW.KIMLEY-HORN.COM CA 00000696

No.	REVISIONS	DATE	BY

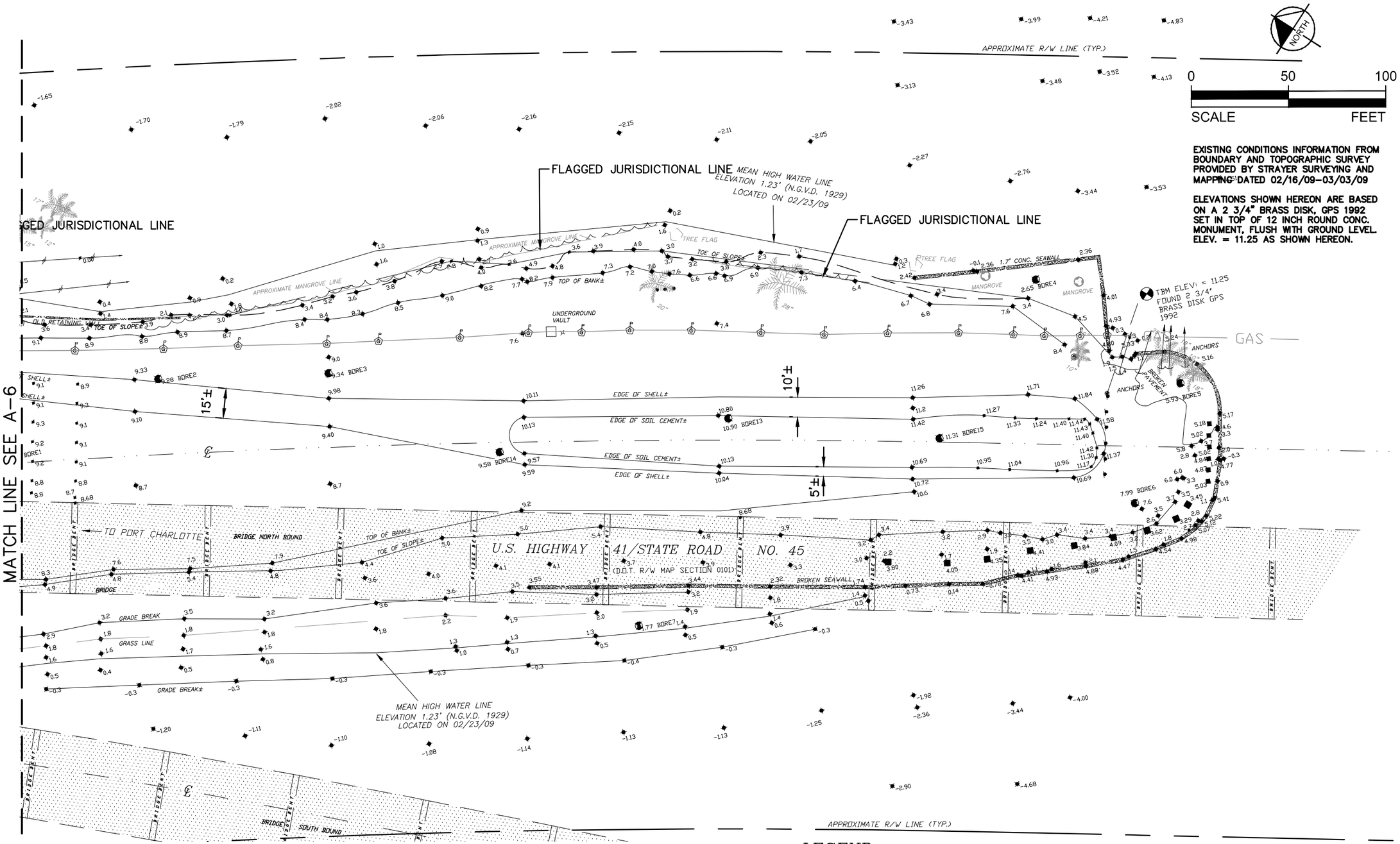

LEGEND

- □ = CONCRETE MONUMENT FOUND. (SIZE & I.D. NOTED)
- ⊗ = CAPPED IRON ROD FOUND (SIZE & I.D. NOTED)
- ● = 5/8" CAPPED IRON ROD SET (L.B. #6639)
- ○ = IRON ROD FOUND (SIZE & I.D. NOTED)
- = NAIL & DISK (I.D. NOTED)
- ▲ = NAIL FOUND
- (P) = PLAT DIMENSION
- (M) = MEASURED DIMENSION
- (C) = CALCULATED DIMENSION
- (D) = DEED DIMENSION
- = UTILITY POLE
- 15.0 = EXISTING ELEVATION
- = CABLE MARKER
- = VALVE
- = FIRE HYDRANT
- = WATER FILTER
- L.B. = LICENSED SURVEYOR BUSINESS
- L.S. = LAND SURVEYOR
- R/W = RIGHT-OF-WAY
- C/L = CENTER LINE
- O/H = OVERHEAD UTILITY LINES
- (TYP.) = TYPICAL
- CONC. = CONCRETE
- T.B.M. = TEMPORARY BENCHMARK SET
- F.F. = FINISHED FLOOR
- U. & D. = UTILITY & DRAINAGE
- = WATER METER
- = SANITARY MANHOLE
- = TELEPHONE
- = ELECTRIC SERV.
- = PVC GUARD POST
- = STREET LIGHT BOX
- = SEWER VALVE
- = MISCELLANEOUS POLE
- = GAS LINE
- = BACKFLOW PREVENTOR
- = WATER FLAG
- = WATER PAINT
- = GAS FLAG
- = GAS PAINT
- = TELEPHONE FLAG
- = TELEPHONE PAINT
- = LIGHT FLAG
- = LIGHT PAINT
- = FIBER OPTIC FLAG
- = FIBER OPTIC PAINT
- = BORE LOCATION W/#
- = CATCH BASIN

No.	REVISIONS	DATE	BY

Kimley»Horn

© 2014 KIMLEY-HORN AND ASSOCIATES, INC.
1777 MAIN STREET, SUITE 200, SARASOTA, FL 34236
PHONE: 941-379-7600
WWW.KIMLEY-HORN.COM CA 00000696

KHA PROJECT 048392.009

DATE OCT., 2014	
SCALE AS SHOWN	
DESIGNED BY	KHA
DRAWN BY	KHA
CHECKED BY	KHA

EXISTING CONDITIONS PLAN

1 OF 3

HARBOR WALK PHASE 1B
PREPARED FOR
CHARLOTTE HARBOR COMMUNITY DEVELOPMENT AGENCY
CHARLOTTE COUNTY FLORIDA

SHEET NUMBER
A-5
100% PLANS

Plotted By:Harvey, Christian Sheet Set:HarborWalk-Phs-1B Layout:A-5 EXISTING CONDITIONS PLAN November 11, 2016 12:34:04pm K:\SAR_CIVIL\048392.009\CIVIL\CAD-Phase-1B\PlanSheets\A-5 EXISTING CONDITIONS PLAN.dwg
This document, together with the concepts and designs presented herein, as an instrument of service, is intended only for the specific purpose and client for which it was prepared. Reuse of and improper reliance on this document without written authorization and adaptation by Kimley-Horn and Associates, Inc. shall be without liability to Kimley-Horn and Associates, Inc.

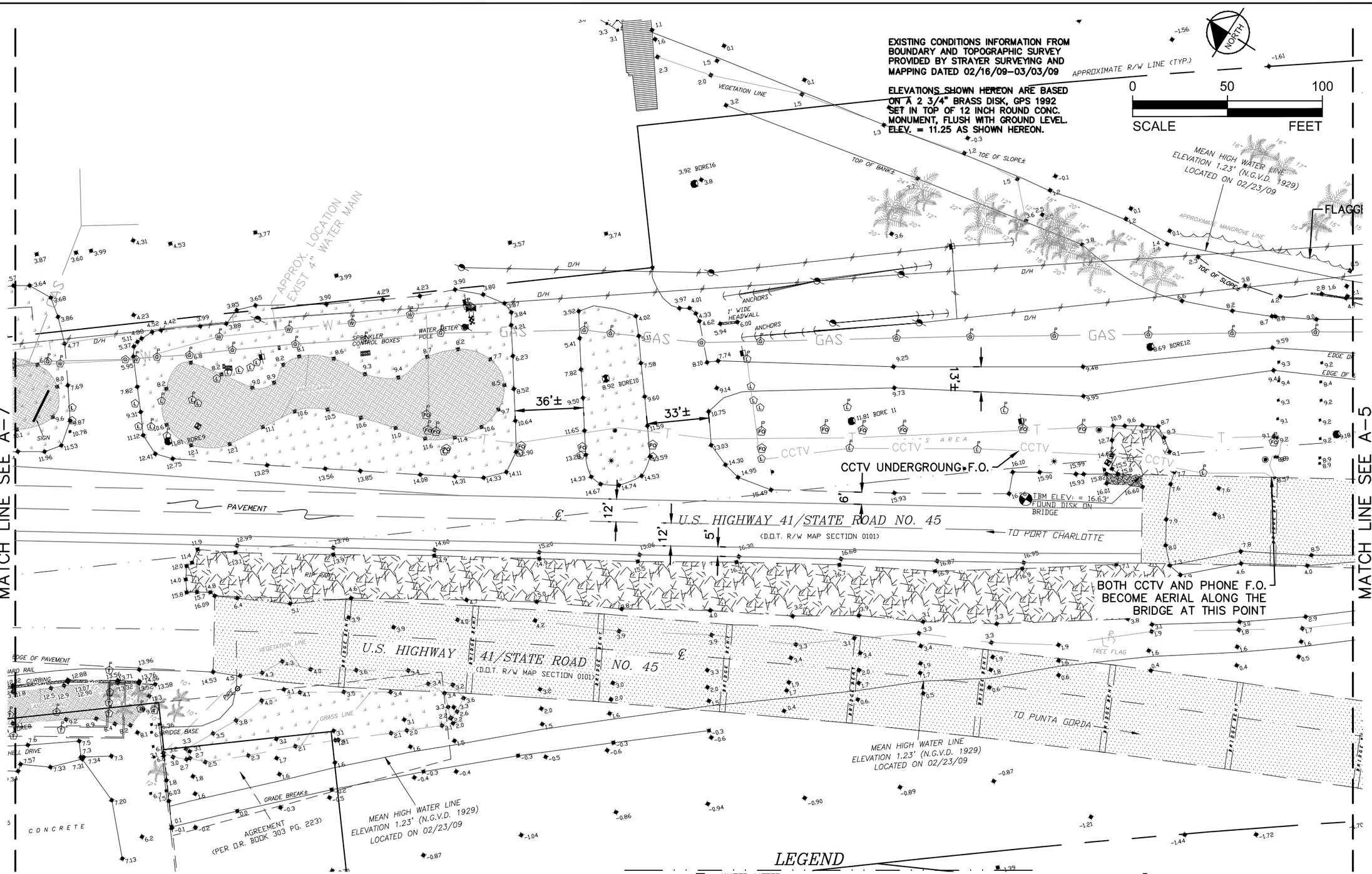

LEGEND

- □ = CONCRETE MONUMENT FOUND. (SIZE & I.D. NOTED)
- ⊗ = CAPPED IRON ROD FOUND (SIZE & I.D. NOTED)
- ● = 5/8" CAPPED IRON ROD SET (L.B. #6639)
- ○ = IRON ROD FOUND (SIZE & I.D. NOTED)
- = NAIL & DISK (I.D. NOTED)
- ▲ = NAIL FOUND
- (P) = PLAT DIMENSION
- (M) = MEASURED DIMENSION
- (C) = CALCULATED DIMENSION
- (D) = DEED DIMENSION
- = UTILITY POLE
- +15.0 = EXISTING ELEVATION
- = CABLE MARKER
- = VALVE
- = FIRE HYDRANT
- = WATER FILTER
- L.B. = LICENSED SURVEYOR BUSINESS
- L.S. = LAND SURVEYOR
- R/W = RIGHT-OF-WAY
- C/L = CENTER LINE
- O/H = OVERHEAD UTILITY LINES
- (TYP.) = TYPICAL
- CONC. = CONCRETE
- T.B.M. = TEMPORARY BENCHMARK SET
- F.F. = FINISHED FLOOR
- U. & D. = UTILITY & DRAINAGE
- = WATER METER
- = SANITARY MANHOLE
- = TELEPHONE
- = ELECTRIC SERV.
- = PVC GUARD POST
- = STREET LIGHT BOX
- = SEWER VALVE
- = MISCELLANEOUS POLE
- = GAS LINE
- = BACKFLOW PREVENTOR
- = WATER FLAG
- = WATER PAINT
- = GAS FLAG
- = GAS PAINT
- = TELEPHONE FLAG
- = TELEPHONE PAINT
- = LIGHT FLAG
- = LIGHT PAINT
- = FIBER OPTIC FLAG
- = FIBER OPTIC PAINT
- = BORE LOCATION W/#
- = CATCH BASIN

No.	REVISIONS	DATE	BY
1	ADD F.O. LOCATION	11/24/15	

Kimley»Horn
© 2014 KIMLEY-HORN AND ASSOCIATES, INC.
1777 MAIN STREET, SUITE 200, SARASOTA, FL 34236
PHONE: 941-379-7600
WWW.KIMLEY-HORN.COM CA 00000696

KHA PROJECT	048392.009
DATE	OCT., 2014
SCALE	AS SHOWN
DESIGNED BY	KHA
DRAWN BY	KHA
CHECKED BY	KHA

EXISTING CONDITIONS PLAN

2 OF 3

HARBOR WALK PHASE 1B
PREPARED FOR
CHARLOTTE HARBOR COMMUNITY DEVELOPMENT AGENCY
CHARLOTTE COUNTY FLORIDA

SHEET NUMBER
A-6
100% PLANS

Plotted By:Harvey, Christian Sheet SetHarborWalk-PH-1B Layout:A-6 EXISTING CONDITIONS PLAN November 11, 2016 12:34:27pm K:\SAR_Civil\048392.009\CIVIL\CAD-Phase-1B\PlanSheets\A-6 EXISTING CONDITIONS PLAN.dwg
This document, together with the concepts and designs presented herein, as an instrument of service, is intended only for the specific purpose and client for which it was prepared. Reuse of and improper reliance on this document without written authorization and adaptation by Kimley-Horn and Associates, Inc. shall be without liability to Kimley-Horn and Associates, Inc.

EXISTING CONDITIONS INFORMATION FROM BOUNDARY AND TOPOGRAPHIC SURVEY PROVIDED BY STRAYER SURVEYING AND MAPPING DATED 02/16/09–03/03/09

ELEVATIONS SHOWN HEREON ARE BASED ON A 2 3/4" BRASS DISK, GPS 1992 SET IN TOP OF 12 INCH ROUND CONC. MONUMENT, FLUSH WITH GROUND LEVEL. ELEV. = 11.25 NGVD AS SHOWN HEREON.

NORTH

0 50 100

SCALE FEET

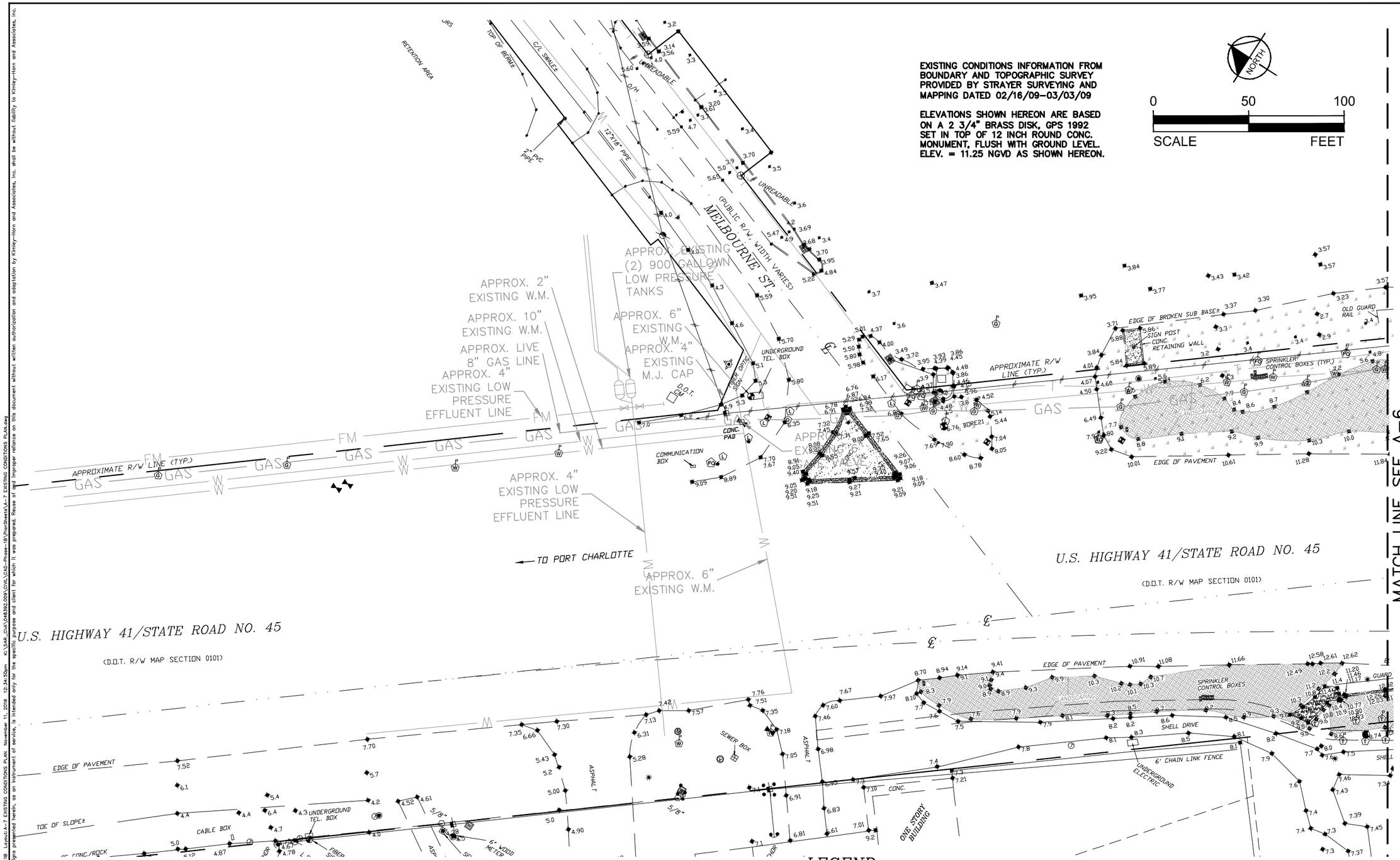

LEGEND

- □ = CONCRETE MONUMENT FOUND. (SIZE & I.D. NOTED)
- ⊗ = CAPPED IRON ROD FOUND (SIZE & I.D. NOTED)
- ● = 5/8" CAPPED IRON ROD SET (L.B. #6639)
- ○ = IRON ROD FOUND (SIZE & I.D. NOTED)
- = NAIL & DISK (I.D. NOTED)
- ▲ = NAIL FOUND
- (P) = PLAT DIMENSION
- (M) = MEASURED DIMENSION
- (C) = CALCULATED DIMENSION
- (D) = DEED DIMENSION
- = UTILITY POLE
- 15.0 = EXISTING ELEVATION (NGVD)
- = CABLE MARKER
- = VALVE
- = FIRE HYDRANT
- = WATER FILTER
- L.B. = LICENSED SURVEYOR BUSINESS
- L.S. = LAND SURVEYOR
- R/W = RIGHT-OF-WAY
- C/L = CENTER LINE

- O/H = OVERHEAD UTILITY LINES
- (TYP.) = TYPICAL
- CONC. = CONCRETE
- T.B.M. = TEMPORARY BENCHMARK SET
- F.F. = FINISHED FLOOR
- U. & D. = UTILITY & DRAINAGE

- W = WATER METER
- S = SANITARY MANHOLE
- T = TELEPHONE
- = ELECTRIC SERV.
- ● = PVC GUARD POST
- = STREET LIGHT BOX
- V = SEWER VALVE
- = MISCELLANEOUS POLE
- = GAS LINE

- = BACKFLOW PREVENTOR
- W = WATER FLAG
- W = WATER PAINT
- G = GAS FLAG
- G = GAS PAINT
- T = TELEPHONE FLAG
- T = TELEPHONE PAINT
- L = LIGHT FLAG
- L = LIGHT PAINT

- FO = FIBER OPTIC FLAG
- FO = FIBER OPTIC PAINT
- = BORE LOCATION W/#
- = CATCH BASIN

Plotted By:Harvey, Christian Sheet Set:HarborWalk-PH-1B Layout:A-7 EXISTING CONDITIONS PLAN November 11, 2016 12:34:50pm K:\SAR_Civil\048392.009\DWG\CAD-Phase-1B\PlanSheets\A-7 EXISTING CONDITIONS PLAN.dwg
This document, together with the concepts and designs presented herein, as an instrument of service, is intended only for the specific purpose and client for which it was prepared. Reuse of and improper reliance on this document without written authorization and adaptation by Kimley-Horn and Associates, Inc. shall be without liability to Kimley-Horn and Associates, Inc.

No.	REVISIONS	DATE	BY

Kimley»Horn

© 2014 KIMLEY-HORN AND ASSOCIATES, INC.
1777 MAIN STREET, SUITE 200, SARASOTA, FL 34236
PHONE: 941-379-7600
WWW.KIMLEY-HORN.COM CA 00000696

KHA PROJECT 048392.009

DATE OCT., 2014

SCALE AS SHOWN
DESIGNED BY KHA
DRAWN BY KHA
CHECKED BY KHA

EXISTING CONDITIONS PLAN

3 OF 3

HARBOR WALK PHASE 1B
PREPARED FOR
CHARLOTTE HARBOR COMMUNITY DEVELOPMENT AGENCY
CHARLOTTE COUNTY FLORIDA

SHEET NUMBER
A-7
100% PLANS

LINE TABLE		
LINE	LENGTH	BEARING
L1	40.76	S31°19'19.39"E
L2	40.01	S41°30'26.01"E
L3	28.01	S22°50'03.87"E
L4	184.01	S27°55'37.18"E
L5	40.01	S9°15'15.04"E
L6	92.01	S24°31'54.98"E
L7	73.75	N81°07'25.19"E
L8	81.29	N58°42'32.13"E
L9	408.30	S26°28'18.42"E
L10	63.78	N58°27'59.84"E

Curve Table					
Curve #	Length	Radius	Delta	Chord Direction	Chord Length
C1	13.05	73.43	10.19	S36° 24' 53"E	13.04
C2	23.94	73.45	18.67	N32° 10' 15"W	23.83
C3	6.52	73.37	5.09	S25° 22' 51"E	6.52
C4	80.00	271.45	16.89	N19° 29' 01"W	79.71
C5	55.65	224.90	14.18	S16° 20' 34"E	55.51
C6	93.55	97.70	54.86	S51° 57' 46"E	90.01
C7	106.81	64.37	95.06	S74° 00' 10"E	94.97

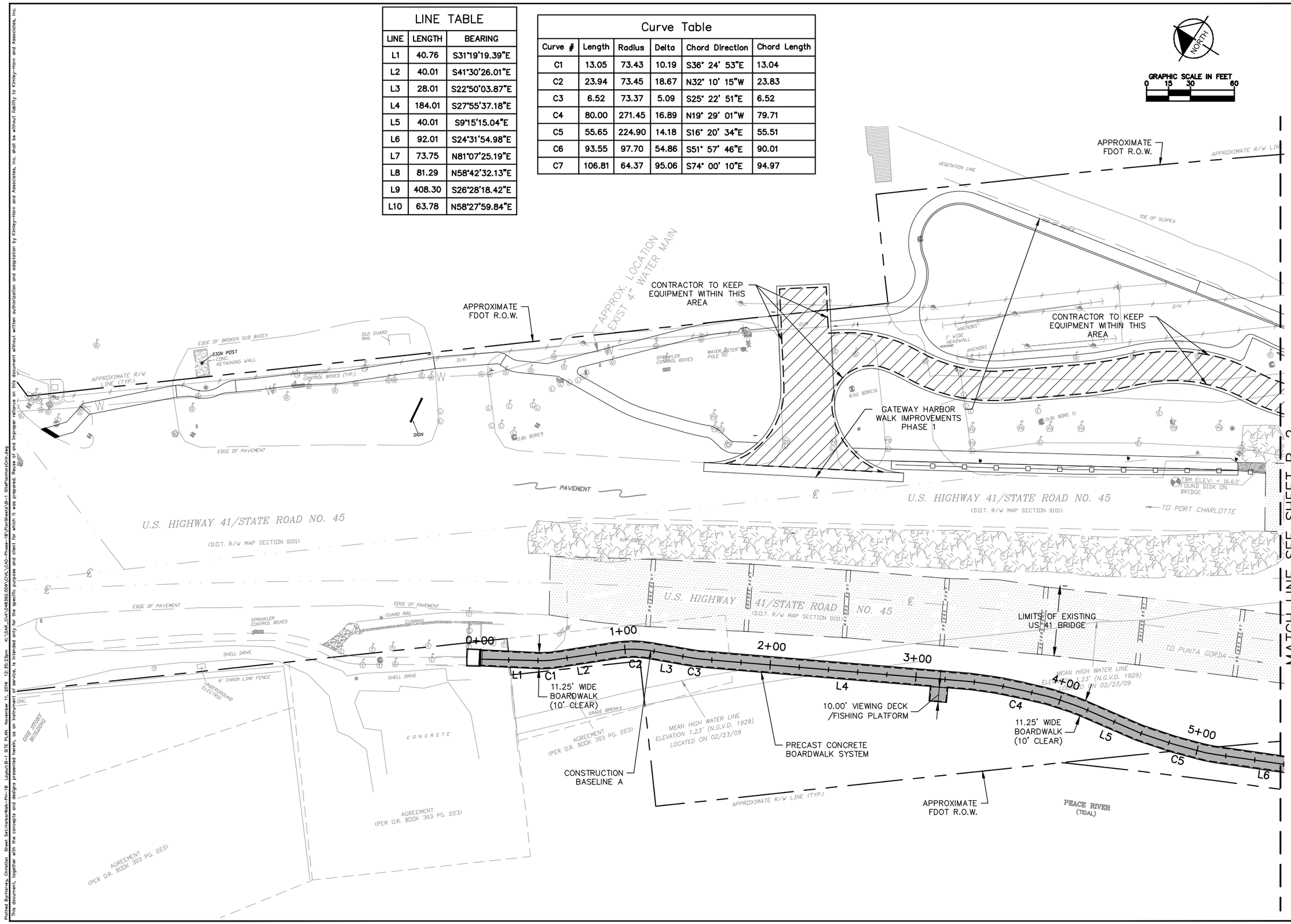

No.	REVISIONS	DATE	BY

Kimley»Horn

© 2014 KIMLEY-HORN AND ASSOCIATES, INC.
1777 MAIN STREET, SUITE 200, SARASOTA, FL 34236
PHONE: 941-379-7600
WWW.KIMLEY-HORN.COM CA 00000696

LICENSED PROFESSIONAL
PETER VAN BUSKIRK, P.E.
STATE OF FLORIDA
PROFESSIONAL ENGINEER
LICENSE NO. 39899
THIS ITEM HAS BEEN ELECTRONICALLY SIGNED AND SEALED BY PETER VAN BUSKIRK ON 11/17/2016 USING A SHA-1 AUTHENTICATION CODE.
PRINTED COPIES OF THIS DOCUMENT ARE NOT CONSIDERED SIGNED AND SEALED AND THE SHA-1 AUTHENTICATION CODE MUST BE VERIFIED ON ANY ELECTRONIC COPIES

KHA PROJECT 048392.009	
DATE	OCT., 2014
SCALE	AS SHOWN
DESIGNED BY	KHA
DRAWN BY	KHA
CHECKED BY	KHA

SITE PLAN AND HORIZONTAL CONTROL PLAN
1 OF 2

HARBOR WALK PHASE 1B
PREPARED FOR
CHARLOTTE HARBOR COMMUNITY DEVELOPMENT AGENCY
CHARLOTTE COUNTY FLORIDA

SHEET NUMBER
B-1
100% PLANS

Plotted By:Harvey, Christian Sheet Set:HarborWalk-PH-1B Layout:B-1 SITE PLAN November 11, 2016 12:35:23pm K:\SAR_Civil\048392.009\CIVIL\CAD-Phase-1B\PlanSheets\B-1 SitePlanHorzCntrl.dwg
This document, together with the concepts and designs presented herein, as an instrument of service, is intended only for the specific purpose and client for which it was prepared. Reuse of and improper reliance on this document without written authorization and adaptation by Kimley-Horn and Associates, Inc. shall be without liability to Kimley-Horn and Associates, Inc.

Curve Table					
Curve #	Length	Radius	Delta	Chord Direction	Chord Length
C1	13.05	73.43	10.19	S36° 24' 53"E	13.04
C2	23.94	73.45	18.67	N32° 10' 15"W	23.83
C3	6.52	73.37	5.09	S25° 22' 51"E	6.52
C4	80.00	271.45	16.89	N19° 29' 01"W	79.71
C5	55.65	224.90	14.18	S16° 20' 34"E	55.51
C6	93.55	97.70	54.86	S51° 57' 46"E	90.01
C7	106.81	64.37	95.06	S74° 00' 10"E	94.97

LINE TABLE		
LINE	LENGTH	BEARING
L1	40.76	S31°19'19.39"E
L2	40.01	S41°30'26.01"E
L3	28.01	S22°50'03.87"E
L4	184.01	S27°55'37.18"E
L5	40.01	S9°15'15.04"E
L6	92.01	S24°31'54.98"E
L7	73.75	N81°07'25.19"E
L8	81.29	N58°42'32.13"E
L9	408.30	S26°28'18.42"E
L10	63.78	N58°27'59.84"E

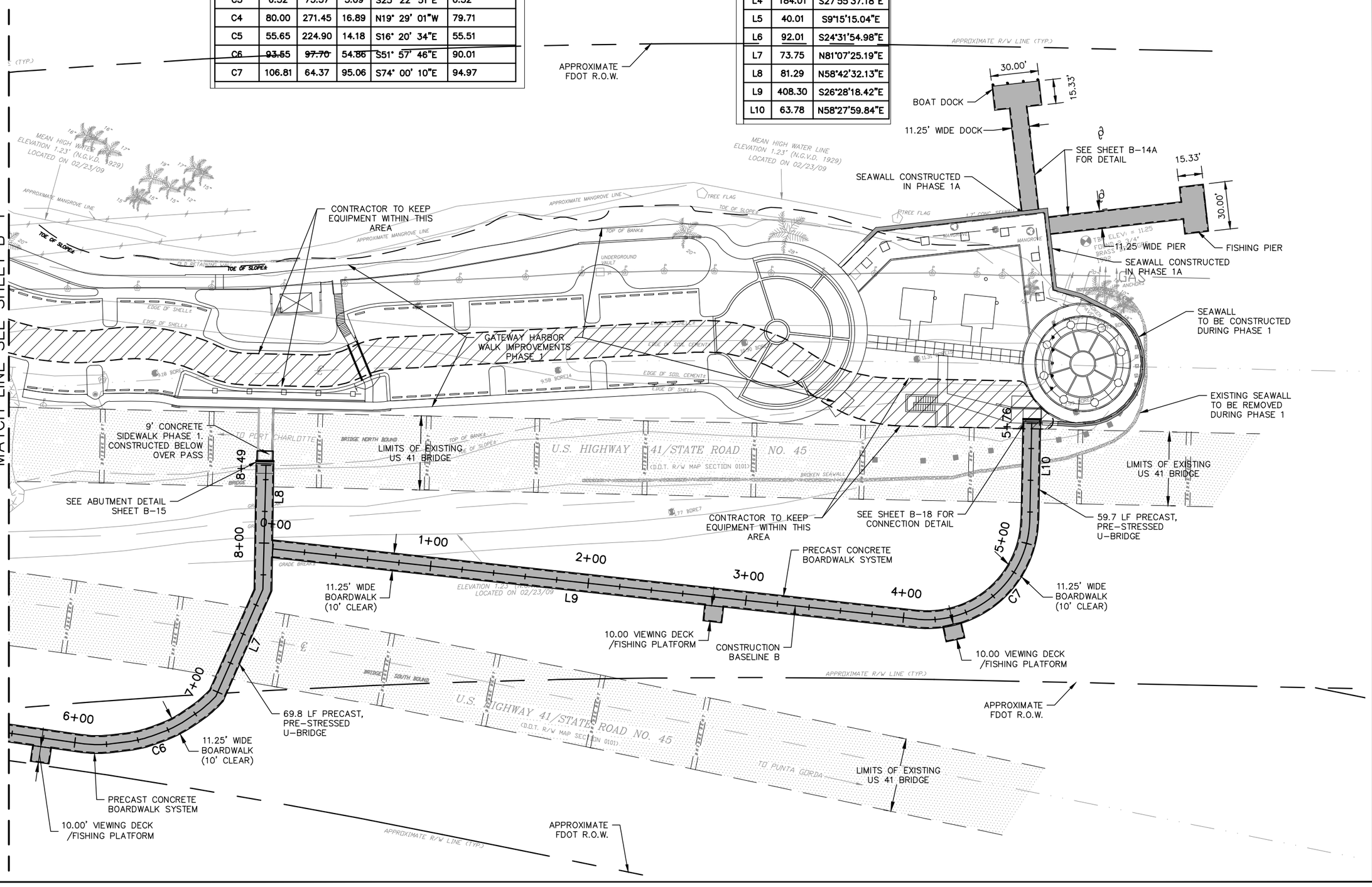

No.	REVISIONS	DATE	BY
1	ADJUST NOTES	11/24/15	

Kimley»Horn

© 2014 KIMLEY-HORN AND ASSOCIATES, INC.

1777 MAIN STREET, SUITE 200, SARASOTA, FL 34236
PHONE: 941-379-7600
WWW.KIMLEY-HORN.COM CA 00000696

LICENSED PROFESSIONAL
PETER VAN BUSKIRK, P.E.
STATE OF FLORIDA
PROFESSIONAL ENGINEER
LICENSE NO. 39899

THIS ITEM HAS BEEN ELECTRONICALLY SIGNED AND SEALED BY PETER VAN BUSKIRK ON 11/11/2016 USING A SHA-1 AUTHENTICATION CODE.

PRINTED COPIES OF THIS DOCUMENT ARE NOT CONSIDERED SIGNED AND SEALED AND THE SHA-1 AUTHENTICATION CODE MUST BE VERIFIED ON ANY ELECTRONIC COPIES

KHA PROJECT	048392.009
DATE	OCT., 2014
SCALE	AS SHOWN
DESIGNED BY	KHA
DRAWN BY	KHA
CHECKED BY	KHA

SITE PLAN AND HORIZONTAL CONTROL PLAN

2 OF 2

HARBOR WALK PHASE 1B

PREPARED FOR
CHARLOTTE HARBOR COMMUNITY DEVELOPMENT AGENCY
CHARLOTTE COUNTY FLORIDA

SHEET NUMBER
B-2
100% PLANS

Plotted By:Harvey, Christian Sheet:SatisfactoryWalk-Ph-1B Layout:B-2 SITE PLAN November 11, 2016 12:35:58pm K:\SAR_CIVIL\048392.009\CIVIL\CAD-Phase-1B\PlanSheets\B-2 SitePlanHorzCntr.dwg
This document, together with the concepts and designs presented herein, as an instrument of service, is intended only for the specific purpose and client for which it was prepared. Reuse of and improper reliance on this document without written authorization and adaptation by Kimley-Horn and Associates, Inc. shall be without liability to Kimley-Horn and Associates, Inc.

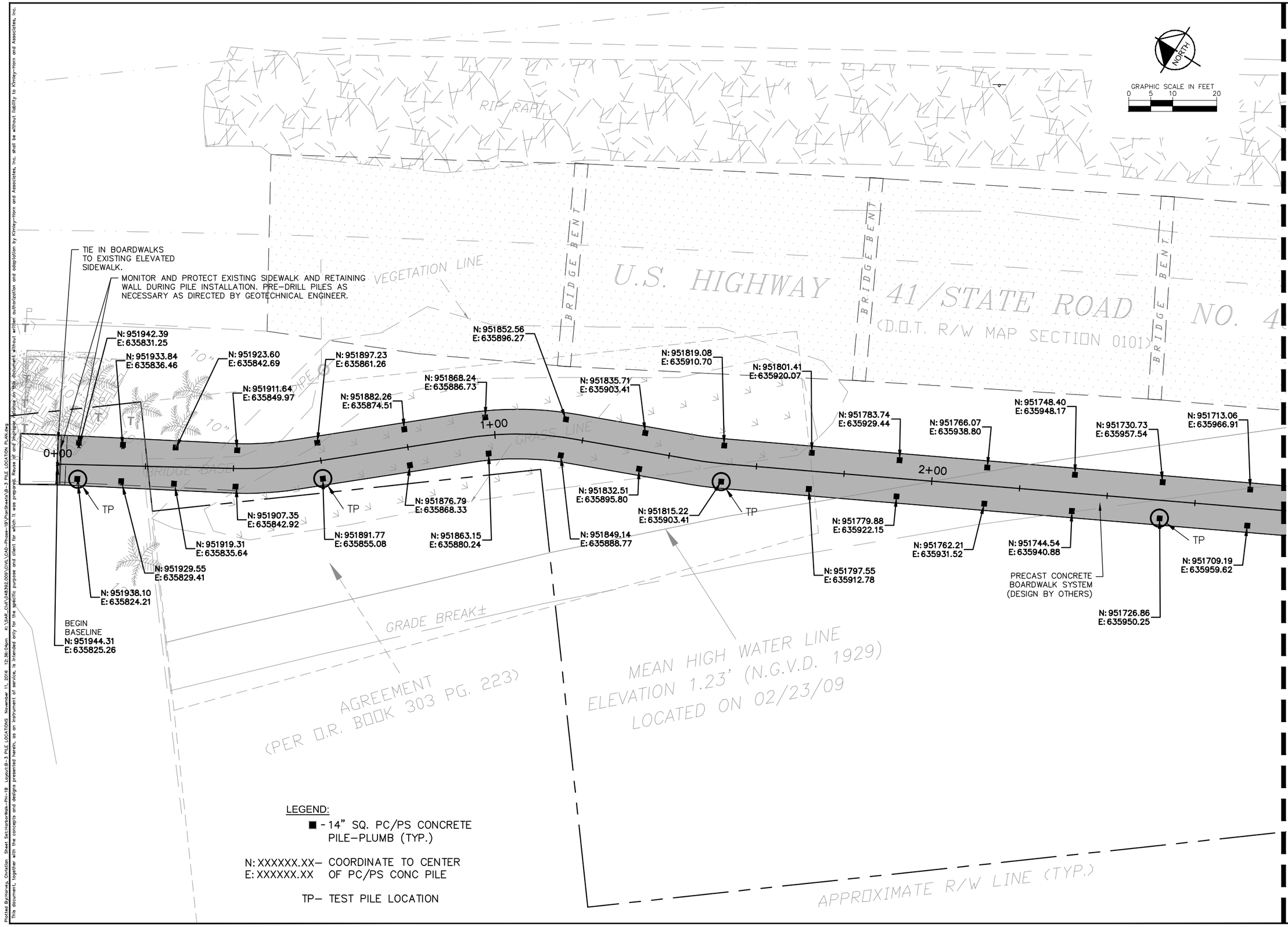

LEGEND:

■ - 14" SQ. PC/PS CONCRETE PILE-PLUMB (TYP.)

N: XXXXXX.XX- COORDINATE TO CENTER
E: XXXXXX.XX OF PC/PS CONC PILE

TP- TEST PILE LOCATION

No.	REVISIONS	DATE	BY
1	ADJUST NOTES	11/24/15	

Kimley»Horn

© 2014 KIMLEY-HORN AND ASSOCIATES, INC.
1777 MAIN STREET, SUITE 200, SARASOTA, FL 34236
PHONE: 941-379-7600
WWW.KIMLEY-HORN.COM CA 00000696

LICENSED PROFESSIONAL
PETER VAN BUSKIRK, P.E.
STATE OF FLORIDA
PROFESSIONAL ENGINEER
LICENSE NO. 39899

THIS ITEM HAS BEEN ELECTRONICALLY SIGNED AND SEALED BY PETER VAN BUSKIRK ON 11/17/2016 USING A SHA-1 AUTHENTICATION CODE.

PRINTED COPIES OF THIS DOCUMENT ARE NOT CONSIDERED SIGNED AND SEALED AND THE SHA-1 AUTHENTICATION CODE MUST BE VERIFIED ON ANY ELECTRONIC COPIES

KHA PROJECT 048392.009
DATE OCT., 2014
SCALE AS SHOWN
DESIGNED BY KHA
DRAWN BY KHA
CHECKED BY KHA

PILE LOCATIONS

1 OF 6

HARBOR WALK PHASE 1B
PREPARED FOR
CHARLOTTE HARBOR COMMUNITY DEVELOPMENT AGENCY
CHARLOTTE COUNTY FLORIDA

SHEET NUMBER
B-3
100% PLANS

Plotted By:Horvey, Christian Sheet Set:HarborWalk-Ph-1B Layout:B-3 PILE LOCATIONS November 11, 2016 12:36:04pm K:\SAR_Civil\048392.009\CIVIL\CAD-Phase-1B\PlanSheets\B-3 PILE LOCATION PLAN.dwg
This document, together with the concepts and designs presented herein, as an instrument of service, is intended only for the specific purpose and client for which it was prepared. Reuse of and improper reliance on this document without written authorization and adaptation by Kimley-Horn and Associates, Inc. shall be without liability to Kimley-Horn and Associates, Inc.

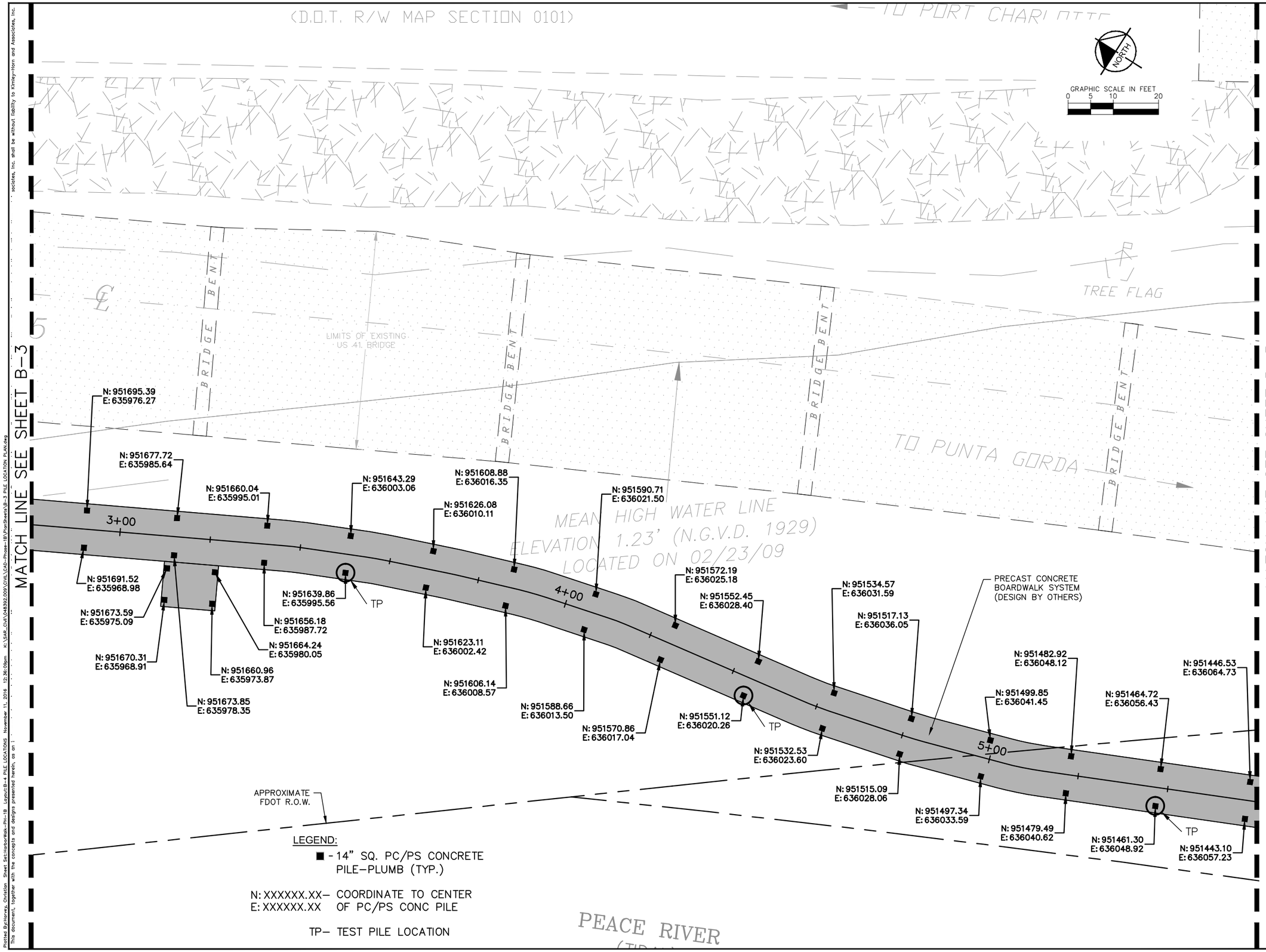

No.	REVISIONS	DATE	BY

Kimley»Horn

© 2014 KIMLEY-HORN AND ASSOCIATES, INC.
1777 MAIN STREET, SUITE 200, SARASOTA, FL 34236
PHONE: 941-379-7600
WWW.KIMLEY-HORN.COM CA 00000696

LICENSED PROFESSIONAL
PETER VAN BUSKIRK, P.E.
STATE OF FLORIDA
PROFESSIONAL ENGINEER
LICENSE NO. 39899
THIS ITEM HAS BEEN ELECTRONICALLY SIGNED AND SEALED BY PETER VAN BUSKIRK
ON 11/11/2016 USING A SHA-1 AUTHENTICATION CODE.
PRINTED COPIES OF THIS DOCUMENT ARE NOT CONSIDERED SIGNED AND SEALED AND THE SHA-1 AUTHENTICATION CODE MUST BE VERIFIED ON ANY ELECTRONIC COPIES

KHA PROJECT 048392.009
DATE OCT., 2014
SCALE AS SHOWN
DESIGNED BY KHA
DRAWN BY KHA
CHECKED BY KHA

PILE LOCATIONS

2 OF 6

HARBOR WALK PHASE 1B
PREPARED FOR
CHARLOTTE HARBOR COMMUNITY DEVELOPMENT AGENCY
CHARLOTTE COUNTY FLORIDA

SHEET NUMBER
B-4
100% PLANS

Plotted By:Harvey, Christian Sheet Set:HarborWalk-Ph-1B Layout:B-4 PILE LOCATIONS November 11, 2016 12:36:08pm K:\SAR_Civil\048392.009\CIVIL\CAD-Phase-1B\PlanSheets\B-3 PILE LOCATION PLAN.dwg
This document, together with the concepts and designs presented herein, as an i ... sociates, Inc. shall be without liability to Kimley-Horn and Associates, Inc.

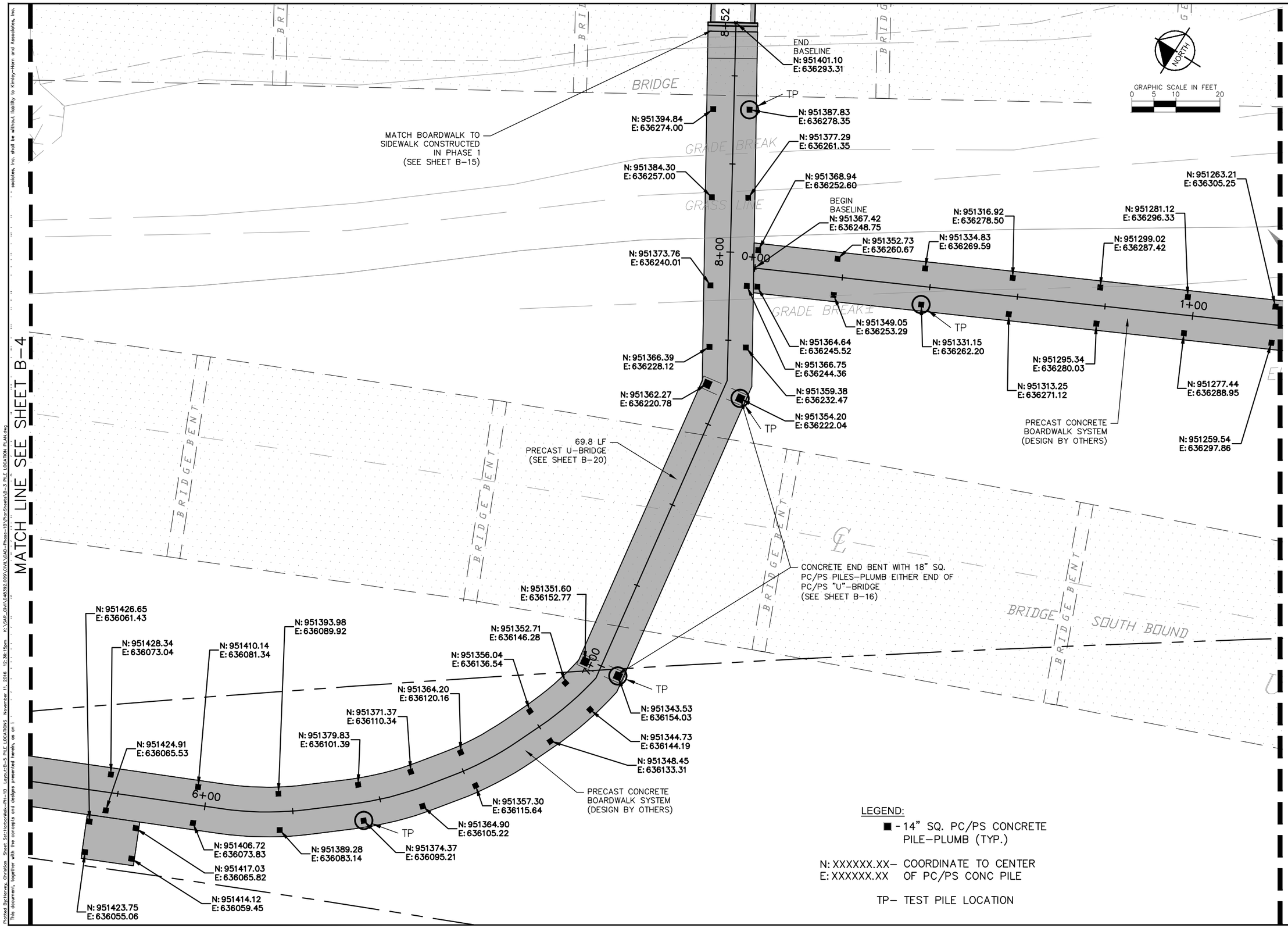

LEGEND:

■ - 14" SQ. PC/PS CONCRETE PILE-PLUMB (TYP.)

N: XXXXXX.XX- COORDINATE TO CENTER
E: XXXXXX.XX OF PC/PS CONC PILE

TP- TEST PILE LOCATION

No.	REVISIONS	DATE	BY
1	ADJUST NOTES	11/24/15	

Kimley»Horn

© 2014 KIMLEY-HORN AND ASSOCIATES, INC.
1777 MAIN STREET, SUITE 200, SARASOTA, FL 34236
PHONE: 941-379-7600
WWW.KIMLEY-HORN.COM CA 00000696

LICENSED PROFESSIONAL
PETER VAN BUSKIRK, P.E.
STATE OF FLORIDA
PROFESSIONAL ENGINEER
LICENSE NO. 39899

THIS ITEM HAS BEEN ELECTRONICALLY SIGNED AND SEALED USING A DIGITAL SIGNATURE.

ON 11/17/2016 USING THE SHA-1 AUTHENTICATION CODE.

PRINTED COPIES OF THIS DOCUMENT ARE NOT CONSIDERED SIGNED AND SEALED AND THE SHA-1 AUTHENTICATION CODE MUST BE VERIFIED ON ANY ELECTRONIC COPIES

PETER VAN BUSKIRK

KHA PROJECT 048392.009	
DATE	OCT., 2014
SCALE	AS SHOWN
DESIGNED BY	KHA
DRAWN BY	KHA
CHECKED BY	KHA

PILE LOCATIONS

3 OF 6

HARBOR WALK PHASE 1B
PREPARED FOR
CHARLOTTE HARBOR COMMUNITY DEVELOPMENT AGENCY
CHARLOTTE COUNTY FLORIDA

SHEET NUMBER
B-5
100% PLANS

Plotted By:Kinney, Christian Sheet SetHarborWalk-Ph-1B Layout:B-5 PILE LOCATIONS November 11, 2016 12:36:15pm K:\SAR_Civil\048392.009\CIVIL\CAD-Phase-1B\PlanSheets\B-3 PILE LOCATION PLAN.dwg
This document, together with the concepts and designs presented herein, as an instrument of service, is intended only for the specific purpose and client for which it was prepared. Reuse of and improper reliance on this document without written consent by Kimley-Horn and Associates, Inc. shall be without liability to Kimley-Horn and Associates, Inc.

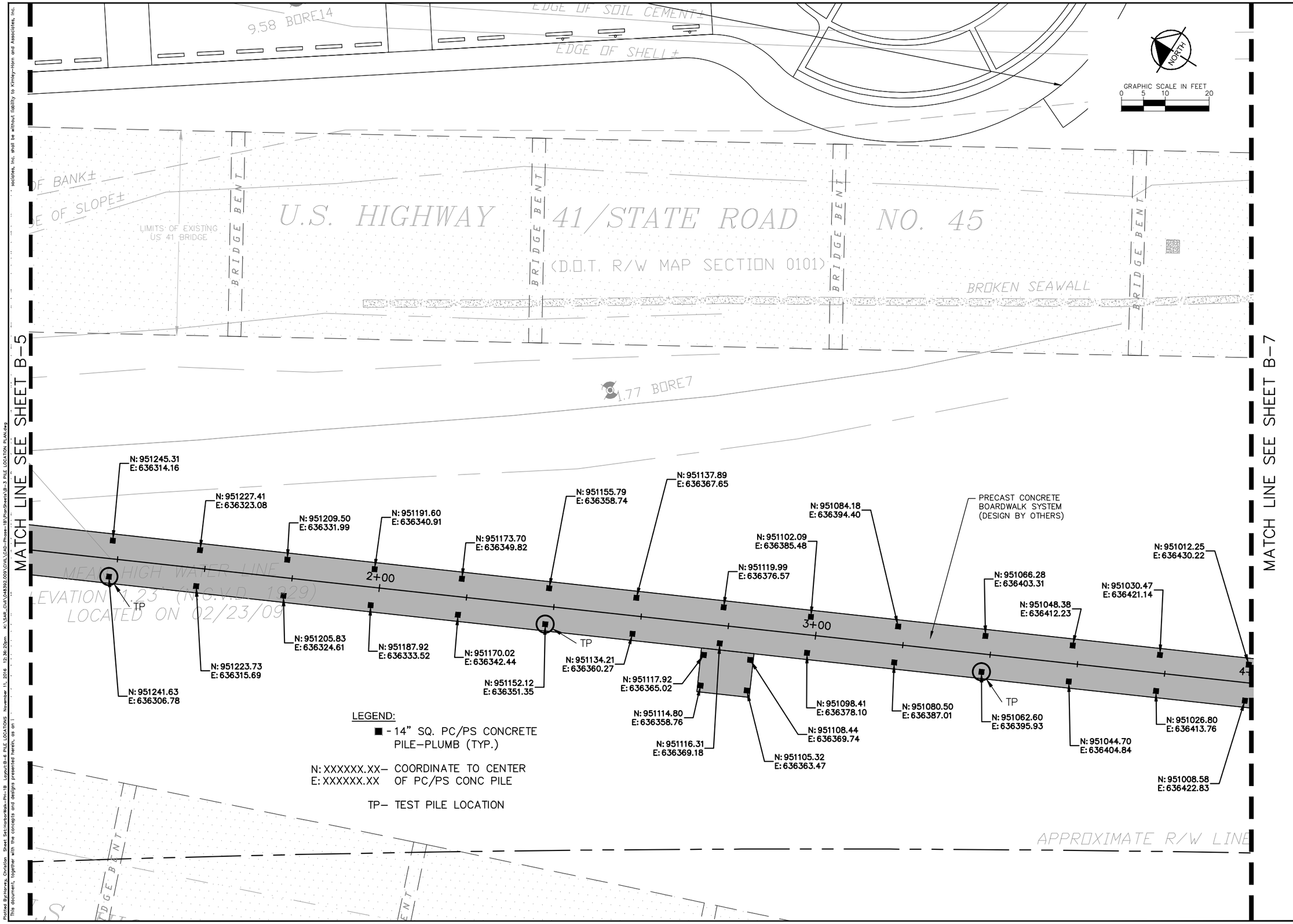

No.	REVISIONS	DATE	BY

Kimley»Horn

© 2014 KIMLEY-HORN AND ASSOCIATES, INC.
1777 MAIN STREET, SUITE 200, SARASOTA, FL 34236
PHONE: 941-379-7600
WWW.KIMLEY-HORN.COM CA 00000696

LICENSED PROFESSIONAL
PETER VAN BUSKIRK, P.E.
STATE OF FLORIDA
PROFESSIONAL ENGINEER
LICENSE NO. 59899
THIS ITEM HAS BEEN ELECTRONICALLY SIGNED AND SEALED BY PETER VAN BUSKIRK
ON 11/11/2016 USING A SHA-1 AUTHENTICATION CODE.
PRINTED COPIES OF THIS DOCUMENT ARE NOT CONSIDERED SIGNED AND SEALED AND THE SHA-1 AUTHENTICATION CODE MUST BE VERIFIED ON ANY ELECTRONIC COPIES

KHA PROJECT 048392.009	
DATE OCT., 2014	
SCALE AS SHOWN	
DESIGNED BY KHA	
DRAWN BY KHA	
CHECKED BY KHA	

PILE LOCATIONS

4 OF 6

HARBOR WALK PHASE 1B
PREPARED FOR
CHARLOTTE HARBOR COMMUNITY DEVELOPMENT AGENCY
CHARLOTTE COUNTY FLORIDA

SHEET NUMBER
B-6
100% PLANS

Plotted By:Harvey, Christian Sheet:SetHarborWalk-Ph-1B Layout:B-6 PILE LOCATIONS November 11, 2016 12:36:20pm K:\SAR_Civil\048392.009\CIVIL\CAD-Phase-1B\PlanSheets\B-3 PILE LOCATION PLAN.dwg
This document, together with the concepts and designs presented herein, as an i ... sociates, Inc. shall be without liability to Kimley-Horn and Associates, Inc.

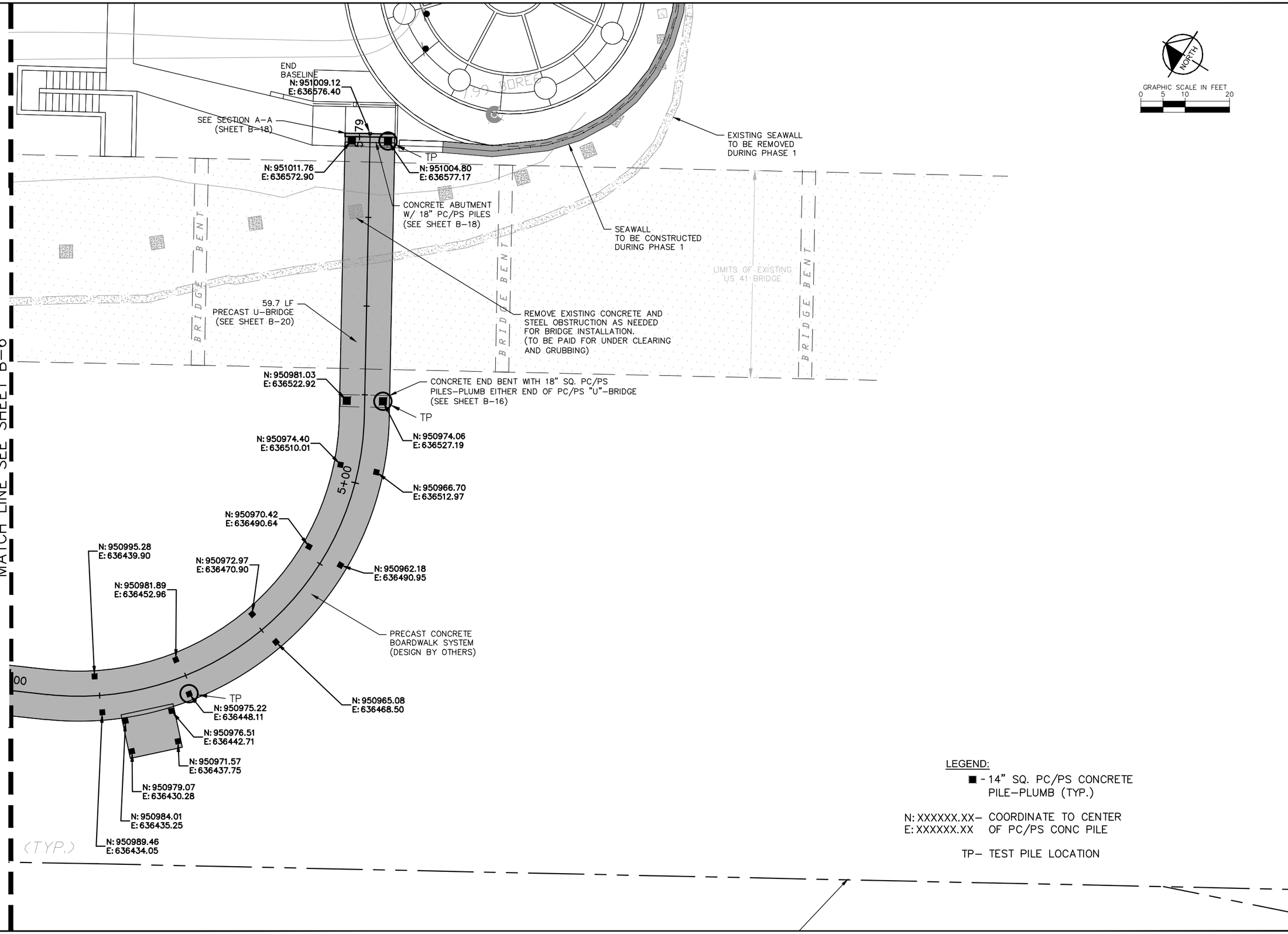

LEGEND:

■ - 14" SQ. PC/PS CONCRETE PILE-PLUMB (TYP.)

N: XXXXXX.XX- COORDINATE TO CENTER
E: XXXXXX.XX OF PC/PS CONC PILE

TP- TEST PILE LOCATION

No.	REVISIONS	DATE	BY

Kimley»Horn

© 2014 KIMLEY-HORN AND ASSOCIATES, INC.
1777 MAIN STREET, SUITE 200, SARASOTA, FL 34236
PHONE: 941-379-7600
WWW.KIMLEY-HORN.COM CA 00000696

LICENSED PROFESSIONAL
PETER VAN BUSKIRK, P.E.
STATE OF FLORIDA
PROFESSIONAL ENGINEER
LICENSE NO. 59899
THIS ITEM HAS BEEN ELECTRONICALLY SIGNED AND SEALED BY PETER VAN BUSKIRK
ON 11/11/2016 USING A SHA-1 AUTHENTICATION CODE.
PRINTED COPIES OF THIS DOCUMENT ARE NOT CONSIDERED SIGNED AND SEALED AND THE SHA-1 AUTHENTICATION CODE MUST BE VERIFIED ON ANY ELECTRONIC COPIES

KHA PROJECT 048392.009	
DATE OCT., 2014	
SCALE AS SHOWN	
DESIGNED BY KHA	
DRAWN BY KHA	
CHECKED BY KHA	

PILE LOCATIONS

5 OF 6

HARBOR WALK PHASE 1B
PREPARED FOR
CHARLOTTE HARBOR COMMUNITY DEVELOPMENT AGENCY
CHARLOTTE COUNTY FLORIDA

SHEET NUMBER
B-7
100% PLANS

Plotted By:Harvey, Christian Sheet Set:HarborWalk-Ph-1B Layout:B-7 PILE LOCATIONS November 11, 2016 12:36:26pm K:\SAR_Civil\048392.009\CIVIL\CAD-Phase-1B\PlanSheets\B-3 PILE LOCATION PLAN.dwg
This document, together with the concepts and designs presented herein, as an instrument of service, is intended only for the specific purpose and client for which it was prepared. Reuse of and improper reliance on this document without written consent by Kimley-Horn and Associates, Inc. shall be without liability to Kimley-Horn and Associates, Inc.

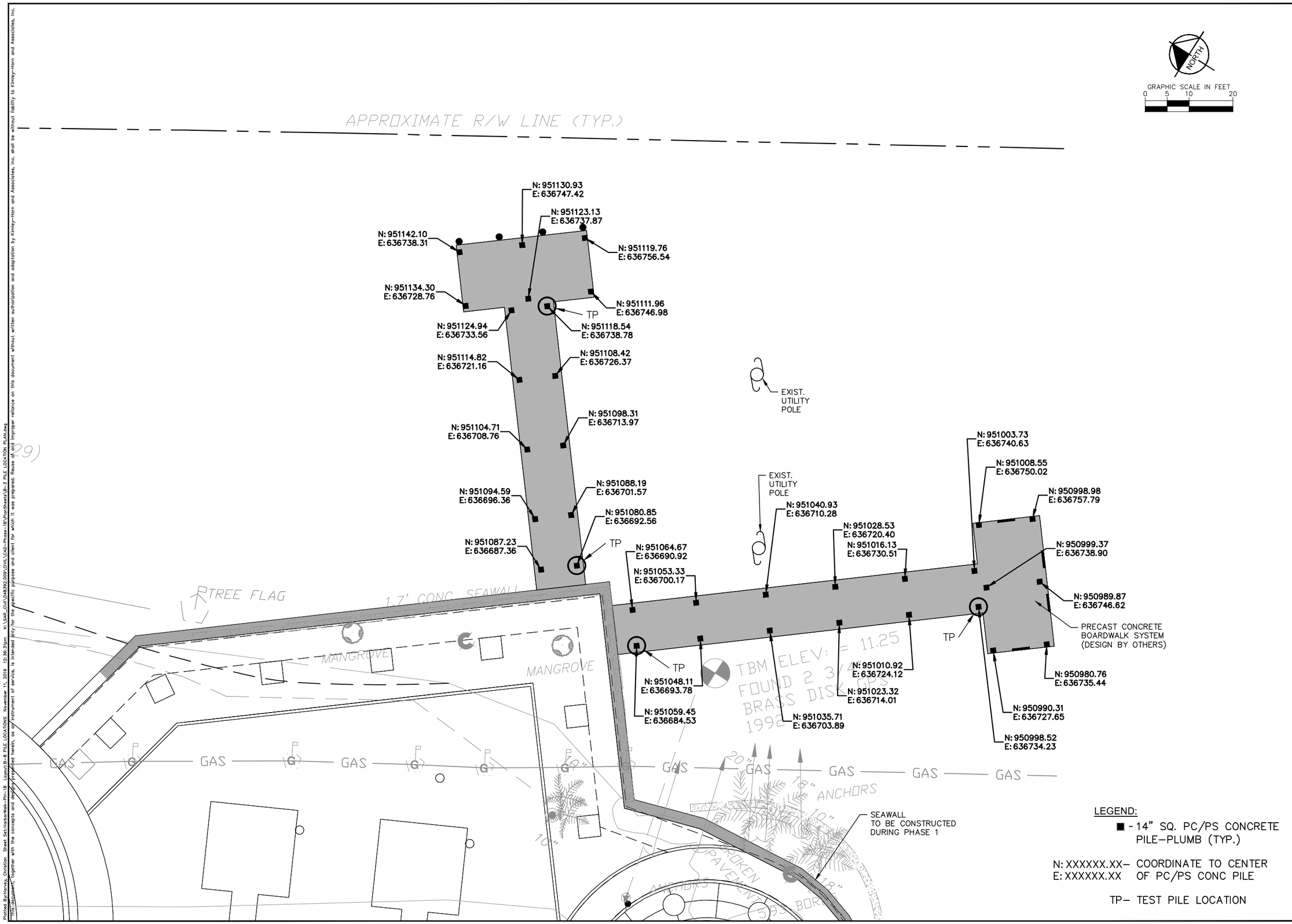

LEGEND:

■ - 14" SQ. PC/PS CONCRETE PILE-PLUMB (TYP.)

N: XXXXXX.XX- COORDINATE TO CENTER
E: XXXXXX.XX OF PC/PS CONC PILE

TP- TEST PILE LOCATION

No.	REVISIONS	DATE	BY

Kimley»Horn

© 2014 KIMLEY-HORN AND ASSOCIATES, INC.
1777 MAIN STREET, SUITE 200, SARASOTA, FL 34236
PHONE: 941-379-7600
WWW.KIMLEY-HORN.COM CA 00000696

LICENSED PROFESSIONAL
PETER VAN BUSKIRK, P.E.
STATE OF FLORIDA
PROFESSIONAL ENGINEER
LICENSE NO. 59899
THIS ITEM HAS BEEN ELECTRONICALLY SIGNED AND SEALED
BY PETER VAN BUSKIRK
ON 11-11-2016 USING A SHA-1 AUTHENTICATION CODE.
PRINTED COPIES OF THIS DOCUMENT ARE NOT CONSIDERED SIGNED AND SEALED AND MAY NOT BE AUTHENTICATED FOR AUTHENTICITY OR INTEGRITY.
VERIFY ON ELECTRONIC COPIES

KHA PROJECT 048392.009
DATE OCT., 2014
SCALE AS SHOWN
DESIGNED BY KHA
DRAWN BY KHA
CHECKED BY KHA

PILE LOCATIONS

6 OF 6

HARBOR WALK PHASE 1B
PREPARED FOR
CHARLOTTE HARBOR
COMMUNITY
DEVELOPMENT AGENCY
CHARLOTTE COUNTY FLORIDA

SHEET NUMBER
B-8
100% PLANS

Plotted By:Kimley, Christian Sheet SetHarborWalk-Ph-1B Layout:B-8 PILE LOCATIONS November 11, 2016 12:36:31pm K:\SAR_Civil\048392.009\CIVIL\CAD-Phase-1B\PlanSheets\B-3 PILE LOCATION PLAN.dwg
This document, together with the concepts and designs presented herein, as an instrument of service, is intended only for the specific purpose and client for which it was prepared. Reuse of and improper reliance on this document without written authorization and adaptation by Kimley-Horn and Associates, Inc. shall be without liability to Kimley-Horn and Associates, Inc.

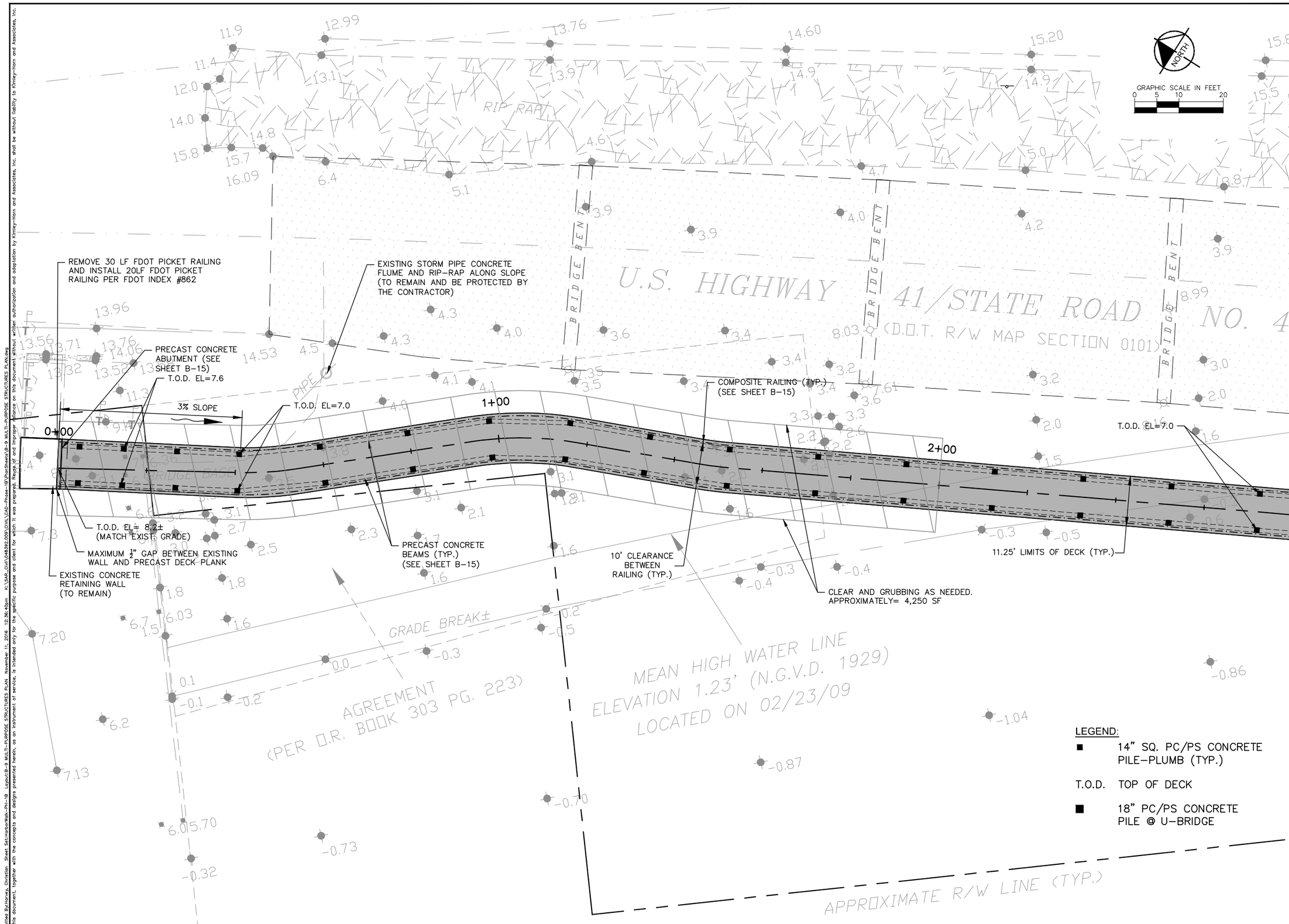

LEGEND:

- ■ 14" SQ. PC/PS CONCRETE PILE-PLUMB (TYP.)
- T.O.D. TOP OF DECK
- ■ 18" PC/PS CONCRETE PILE @ U-BRIDGE

No.	REVISIONS	DATE	BY

Kimley»Horn
© 2014 KIMLEY-HORN AND ASSOCIATES, INC.
1777 MAIN STREET, SUITE 200, SARASOTA, FL 34236
PHONE: 941-379-7600
WWW.KIMLEY-HORN.COM CA 00000696

LICENSED PROFESSIONAL
PETER VAN BUSKIRK, P.E.
STATE OF FLORIDA
PROFESSIONAL ENGINEER
LICENSE NO. 39899
THIS ITEM HAS BEEN ELECTRONICALLY SIGNED AND SEALED BY PETER VAN BUSKIRK
ON 11/11/2016 USING A SHA-1 AUTHENTICATION CODE.
PRINTED COPIES OF THIS DOCUMENT ARE NOT CONSIDERED SIGNED AND SEALED AND THE SHA-1 AUTHENTICATION CODE MUST BE VERIFIED ON ANY ELECTRONIC COPIES

KHA PROJECT	048392.009
DATE	OCT., 2014
SCALE	AS SHOWN
DESIGNED BY	KHA
DRAWN BY	KHA
CHECKED BY	KHA

MULTI-PURPOSE STRUCTURES PLAN

1 OF 6

HARBOR WALK PHASE 1B
PREPARED FOR
CHARLOTTE HARBOR COMMUNITY DEVELOPMENT AGENCY
CHARLOTTE COUNTY FLORIDA

SHEET NUMBER
B-9
100% PLANS

Plotted By:Harvey, Christian Sheet Set:HarborWalk-Ph-1B Layout:B-9 MULTI-PURPOSE STRUCTURES PLAN November 11, 2016 12:36:40pm K:\SAR_Civil\048392.009\CIVIL\CAD-Phase-1B\PlanSheets\B-9 MULTI-PURPOSE STRUCTURES PLAN.dwg
This document, together with the concepts and designs presented herein, as an instrument of service, is intended only for the specific purpose and client for which it was prepared. Reuse of and improper reliance on this document without written authorization and adaptation by Kimley-Horn and Associates, Inc. shall be without liability to Kimley-Horn and Associates, Inc.

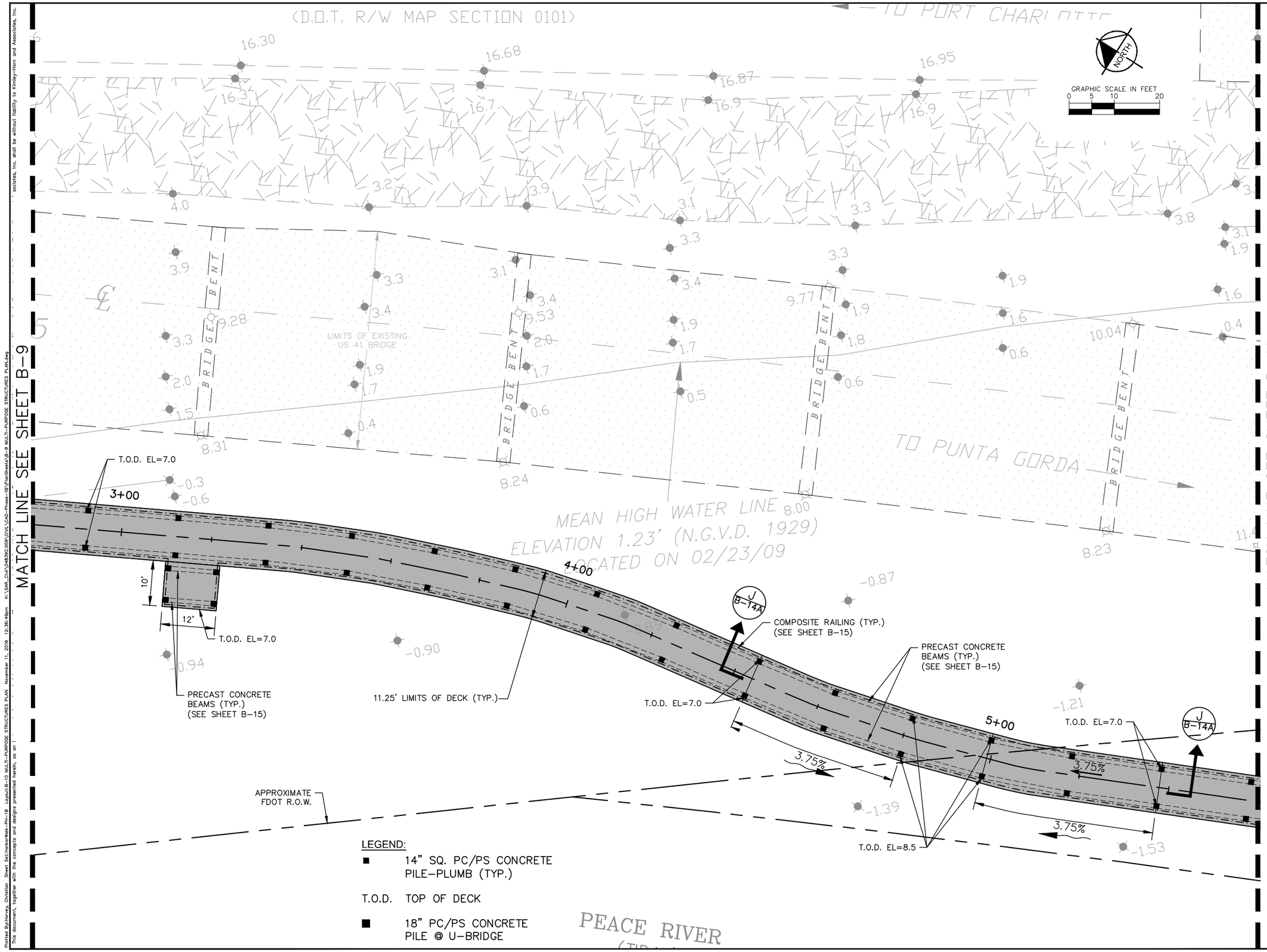

LEGEND:

- ■ 14" SQ. PC/PS CONCRETE PILE-PLUMB (TYP.)
- T.O.D. TOP OF DECK
- ■ 18" PC/PS CONCRETE PILE @ U-BRIDGE

Plotted By:Harvey, Christian Sheet Set:HarborWalk-PH-1B Layout:B-10 MULTI-PURPOSE STRUCTURES PLAN November 11, 2016 12:36:49pm K:\SAR_CIVIL\048392.009\CIVIL\CAD-Phase-1B\PlanSheets\B-9 MULTI-PURPOSE STRUCTURES PLAN.dwg
This document, together with the concepts and designs presented herein, as an ... sociates, Inc. shall be without liability to Kimley-Horn and Associates, Inc.

No.	REVISIONS	DATE	BY

Kimley»Horn
© 2014 KIMLEY-HORN AND ASSOCIATES, INC.
1777 MAIN STREET, SUITE 200, SARASOTA, FL 34236
PHONE: 941-379-7600
WWW.KIMLEY-HORN.COM CA 00000696

LICENSED PROFESSIONAL
PETER VAN BUSKIRK, P.E.
STATE OF FLORIDA
PROFESSIONAL ENGINEER
LICENSE NO. 39899
THIS ITEM HAS BEEN ELECTRONICALLY SIGNED AND SEALED
BY PETER VAN BUSKIRK
ON 11/11/2016 USING A SHA-1 AUTHENTICATION CODE.
PRINTED COPIES OF THIS DOCUMENT ARE NOT CONSIDERED SIGNED AND SEALED AND MAY NOT BE AUTHENTICATED TO VERIFY THE CONTENTS OF ANY ELECTRONIC COPIES

KHA PROJECT	048392.009
DATE	OCT., 2014
SCALE	AS SHOWN
DESIGNED BY	KHA
DRAWN BY	KHA
CHECKED BY	KHA

MULTI-PURPOSE STRUCTURES PLAN

2 OF 6

HARBOR WALK PHASE 1B
PREPARED FOR
CHARLOTTE HARBOR COMMUNITY DEVELOPMENT AGENCY
CHARLOTTE COUNTY FLORIDA

SHEET NUMBER
B-10
100% PLANS

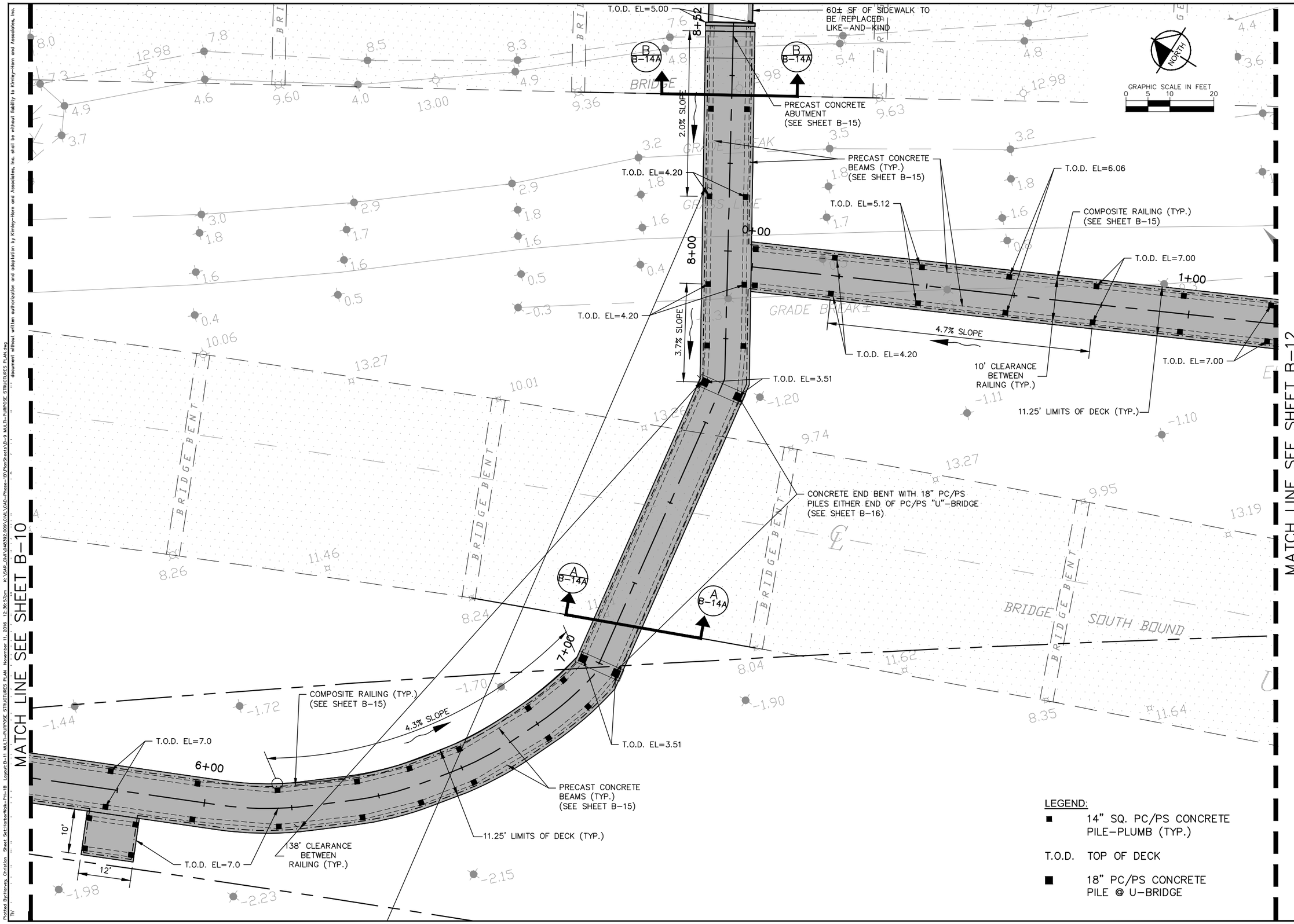

LEGEND:

- ■ 14" SQ. PC/PS CONCRETE PILE-PLUMB (TYP.)
- T.O.D. TOP OF DECK
- ■ 18" PC/PS CONCRETE PILE @ U-BRIDGE

No.	REVISIONS	DATE	BY

Kimley»Horn

© 2014 KIMLEY-HORN AND ASSOCIATES, INC.
1777 MAIN STREET, SUITE 200, SARASOTA, FL 34236
PHONE: 941-379-7600
WWW.KIMLEY-HORN.COM CA 00000696

LICENSED PROFESSIONAL
PETER VAN BUSKIRK, P.E.
STATE OF FLORIDA
PROFESSIONAL ENGINEER
LICENSE NO. 39899
THIS ITEM HAS BEEN ELECTRONICALLY SIGNED AND SEALED
ON 11-11-2016 USING A SHA-1 AUTHENTICATION CODE
BY PETER VAN BUSKIRK
PRINTED COPIES OF THIS DOCUMENT ARE NOT CONSIDERED SIGNED AND SEALED AND MAY NOT BE MODIFIED. VERIFY AUTHENTICATION CODE ON ELECTRONIC COPIES

KHA PROJECT 048392.009
DATE OCT., 2014
SCALE AS SHOWN
DESIGNED BY KHA
DRAWN BY KHA
CHECKED BY KHA

MULTI-PURPOSE STRUCTURES PLAN
3 OF 6

HARBOR WALK PHASE 1B
PREPARED FOR
CHARLOTTE HARBOR COMMUNITY DEVELOPMENT AGENCY
CHARLOTTE COUNTY FLORIDA

SHEET NUMBER
B-11
100% PLANS

document without written authorization and adaptation by Kimley-Horn and Associates, Inc. shall be without liability to Kimley-Horn and Associates, Inc.
Plotted By:Horsley, Christian Sheet: SetHarborWalk-Ph-1B Layout:B-11 MULTI-PURPOSE STRUCTURES PLAN November 11, 2016 12:36:57pm K:\SAR_Civil\048392.009\CIVIL\CAD-Phase-1B\PlanSheets\B-9 MULTI-PURPOSE STRUCTURES PLAN.dwg

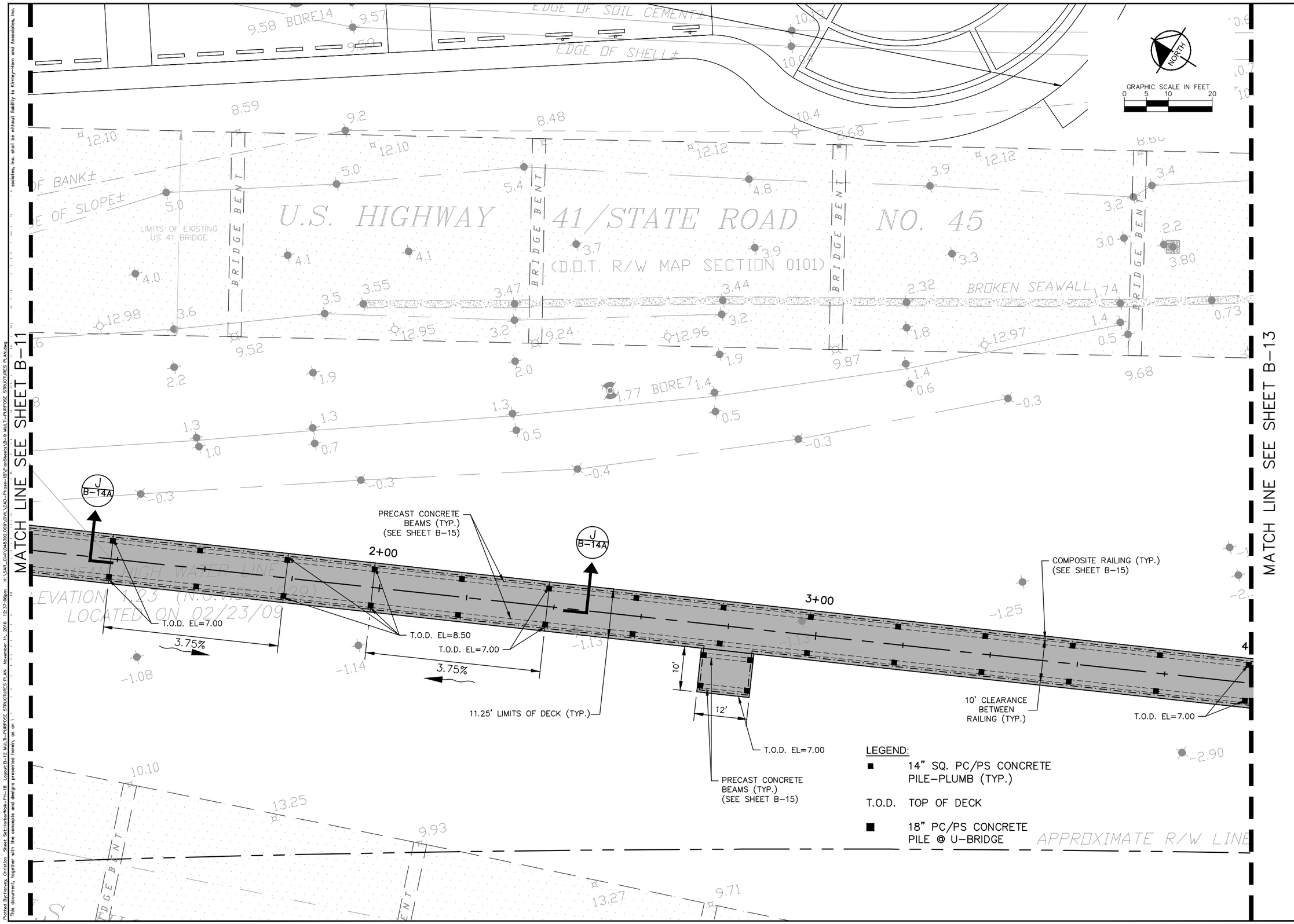

No.	REVISIONS	DATE	BY

Kimley»Horn

© 2014 KIMLEY-HORN AND ASSOCIATES, INC.
1777 MAIN STREET, SUITE 200, SARASOTA, FL 34236
PHONE: 941-379-7600
WWW.KIMLEY-HORN.COM CA 00000696

LICENSED PROFESSIONAL
PETER VAN BUSKIRK, P.E.
STATE OF FLORIDA
PROFESSIONAL ENGINEER
LICENSE NO. 39899
THIS ITEM HAS BEEN ELECTRONICALLY SIGNED AND SEALED BY PETER VAN BUSKIRK
ON 11/11/2016 USING A SHA-1 AUTHENTICATION CODE.
PRINTED COPIES OF THIS DOCUMENT ARE NOT CONSIDERED SIGNED AND SEALED AND MAY NOT BE AUTHENTICATED. CODE MUST BE VERIFIED ON ANY ELECTRONIC COPIES

KHA PROJECT 048392.009	
DATE	OCT., 2014
SCALE	AS SHOWN
DESIGNED BY	KHA
DRAWN BY	KHA
CHECKED BY	KHA

MULTI-PURPOSE STRUCTURES PLAN

4 OF 6

HARBOR WALK PHASE 1B
PREPARED FOR
CHARLOTTE HARBOR COMMUNITY DEVELOPMENT AGENCY
CHARLOTTE COUNTY FLORIDA

SHEET NUMBER
B-12
100% PLANS

Plotted By:Harvey, Christian Sheet Set:HarborWalk-PH-1B Layout:B-12 MULTI-PURPOSE STRUCTURES PLAN November 11, 2016 12:37:06pm K:\SAR_CIVIL\048392.009\CIVIL\CAD-Phase-1B\PlanSheets\B-9 MULTI-PURPOSE STRUCTURES PLAN.dwg
This document, together with the concepts and designs presented herein, as an ... sociates, Inc. shall be without liability to Kimley-Horn and Associates, Inc.

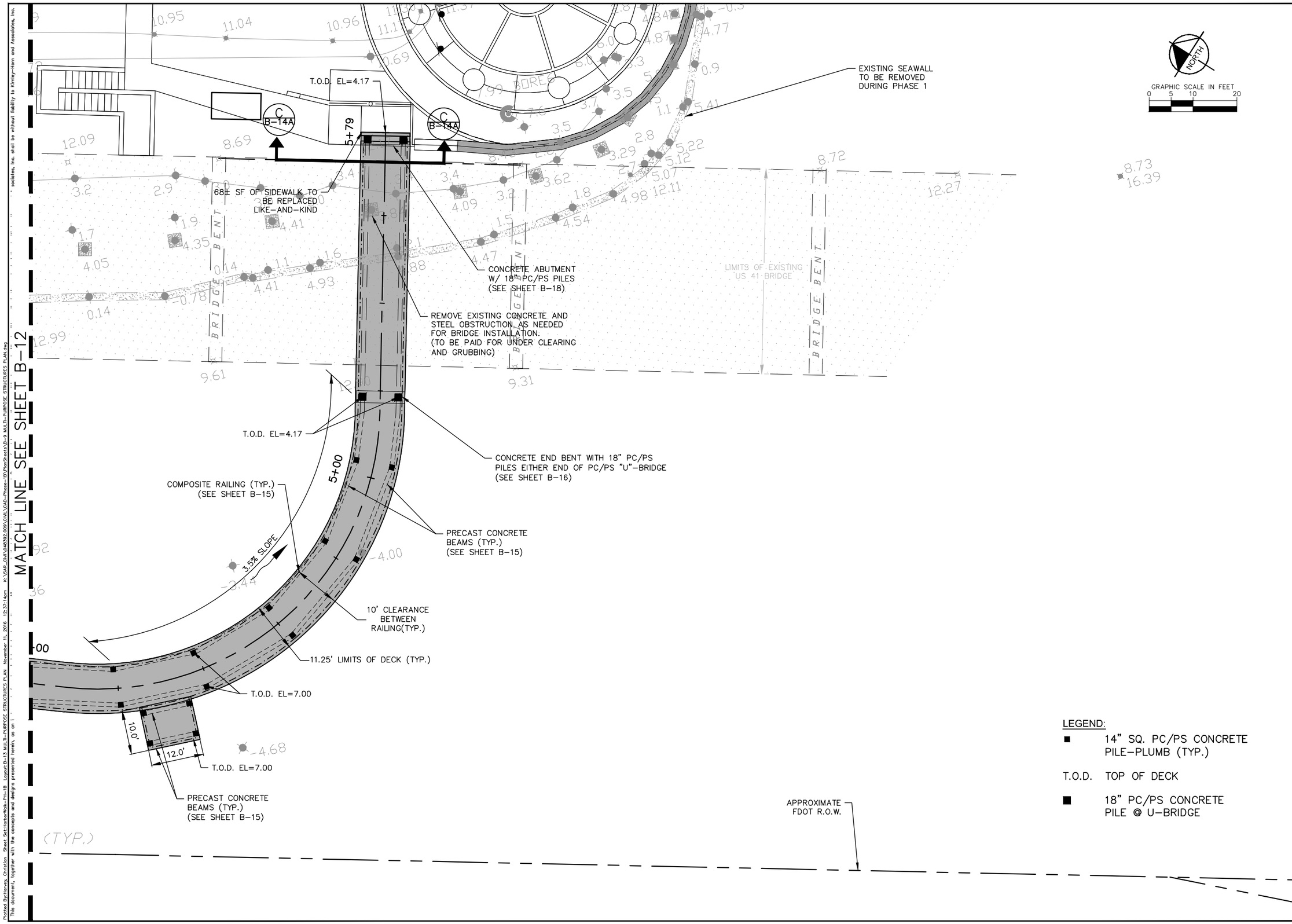

LEGEND:

- ■ 14" SQ. PC/PS CONCRETE PILE-PLUMB (TYP.)
- T.O.D. TOP OF DECK
- ■ 18" PC/PS CONCRETE PILE @ U-BRIDGE

No.	REVISIONS	DATE	BY

Kimley»Horn

© 2014 KIMLEY-HORN AND ASSOCIATES, INC.
1777 MAIN STREET, SUITE 200, SARASOTA, FL 34236
PHONE: 941-379-7600
WWW.KIMLEY-HORN.COM CA 00000696

LICENSED PROFESSIONAL
PETER VAN BUSKIRK, P.E.
STATE OF FLORIDA
PROFESSIONAL ENGINEER
LICENSE NO. 39899
THIS ITEM HAS BEEN ELECTRONICALLY SIGNED AND SEALED BY PETER VAN BUSKIRK
ON 11/11/2016 USING A SHA-1 AUTHENTICATION CODE.
PRINTED COPIES OF THIS DOCUMENT ARE NOT CONSIDERED SIGNED AND SEALED AND THE SHA-1 AUTHENTICATION CODE MUST BE VERIFIED ON ANY ELECTRONIC COPIES

KHA PROJECT 048392.009	
DATE	OCT., 2014
SCALE	AS SHOWN
DESIGNED BY	KHA
DRAWN BY	KHA
CHECKED BY	KHA

MULTI-PURPOSE STRUCTURES PLAN

5 OF 6

HARBOR WALK PHASE 1B
PREPARED FOR
CHARLOTTE HARBOR COMMUNITY DEVELOPMENT AGENCY
CHARLOTTE COUNTY FLORIDA

SHEET NUMBER
B-13
100% PLANS

Plotted By:Harvey, Christian Sheet:HarborWalk-PH-1B Layout:B-13 MULTI-PURPOSE STRUCTURES PLAN November 11, 2016 12:37:14pm K:\SAR_CIVIL\048392.009\CIVIL\CAD-Phase-1B\PlanSheets\B-9 MULTI-PURPOSE STRUCTURES PLAN.dwg
This document, together with the concepts and designs presented herein, as an instrument of service, is intended only for the specific purpose and client for which it was prepared. Reuse of and improvements to this document, together with the concepts and designs presented herein, as an instrument of service, shall be without liability to Kimley-Horn and Associates, Inc.

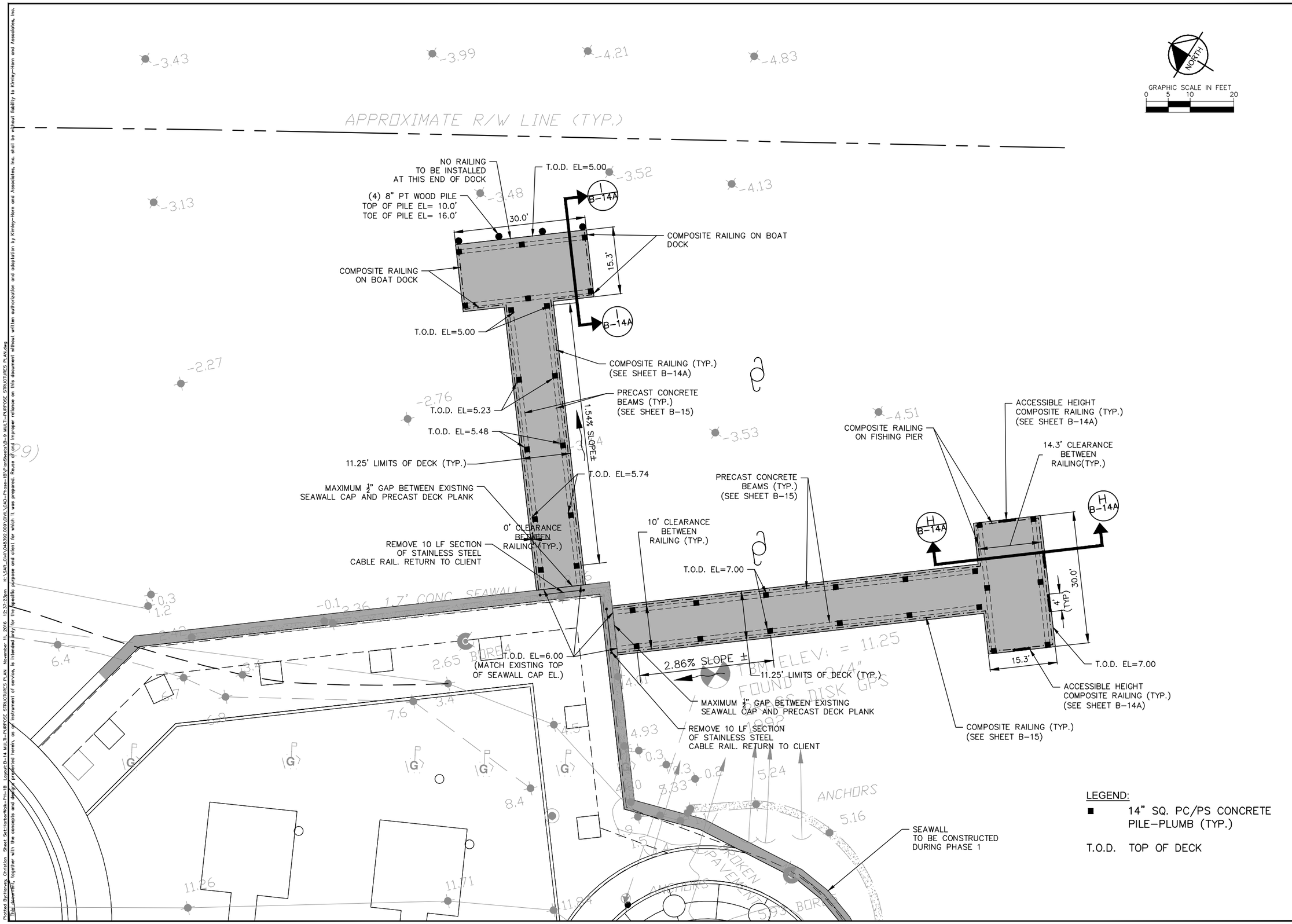

LEGEND:

■ 14" SQ. PC/PS CONCRETE PILE-PLUMB (TYP.)

T.O.D. TOP OF DECK

No.	REVISIONS	DATE	BY

Kimley»Horn

© 2014 KIMLEY-HORN AND ASSOCIATES, INC.
1777 MAIN STREET, SUITE 200, SARASOTA, FL 34236
PHONE: 941-379-7600
WWW.KIMLEY-HORN.COM CA 00000696

LICENSED PROFESSIONAL
PETER VAN BUSKIRK, P.E.
STATE OF FLORIDA
PROFESSIONAL ENGINEER
LICENSE NO. 39899
THIS ITEM HAS BEEN ELECTRONICALLY SIGNED AND SEALED BY PETER VAN BUSKIRK
ON 11/11/2016 USING A SHA-1 AUTHENTICATION CODE
PRINTED COPIES OF THIS DOCUMENT ARE NOT CONSIDERED SIGNED AND SEALED AND THE SHA-1 AUTHENTICATION CODE MUST BE VERIFIED ON ANY ELECTRONIC COPIES

KHA PROJECT 048392.009	
DATE OCT., 2014	
SCALE AS SHOWN	
DESIGNED BY KHA	
DRAWN BY KHA	
CHECKED BY KHA	

MULTI-PURPOSE STRUCTURES PLAN

6 OF 6

HARBOR WALK PHASE 1B
PREPARED FOR
CHARLOTTE HARBOR COMMUNITY DEVELOPMENT AGENCY
CHARLOTTE COUNTY FLORIDA

SHEET NUMBER
B-14
100% PLANS

Plotted By:Harvey, Christian Sheet Set:HarborWalk-PH-1B Layout:B-14 MULTI-PURPOSE STRUCTURES PLAN November 11, 2016 12:37:23pm K:\SAR_CIVIL\048392.009\CIVIL\CAD-Phase-1B\PlanSheets\B-9 MULTI-PURPOSE STRUCTURES PLAN.dwg
This document, together with the concepts and designs presented herein, as an instrument of service, is intended only for the specific purpose and client for which it was prepared. Reuse of and improper reliance on this document without written authorization and adaptation by Kimley-Horn and Associates, Inc. shall be without liability to Kimley-Horn and Associates, Inc.

SECTION A–A

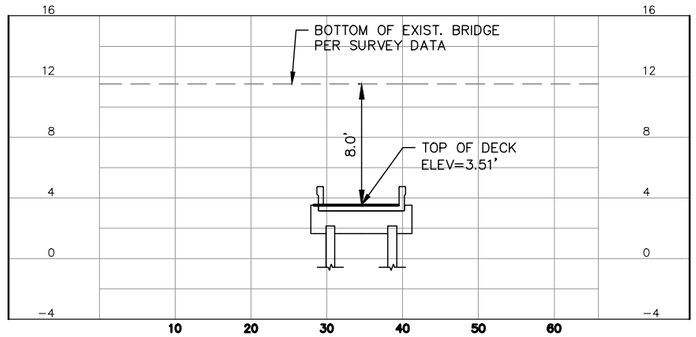

SCALE: HORZ. 1" = 20'
VERT. 1" = 10'

SECTION B–B

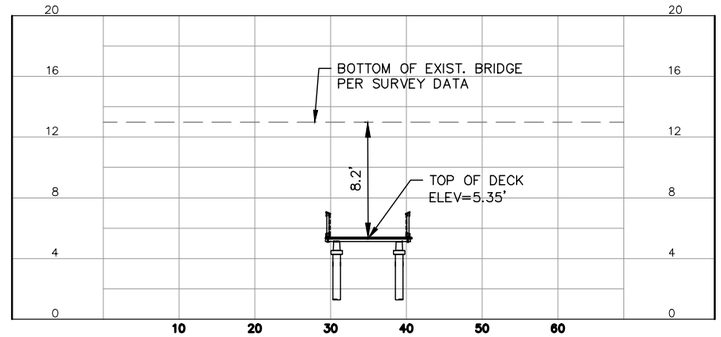

SCALE: HORZ. 1" = 20'
VERT. 1" = 10'

SECTION C–C

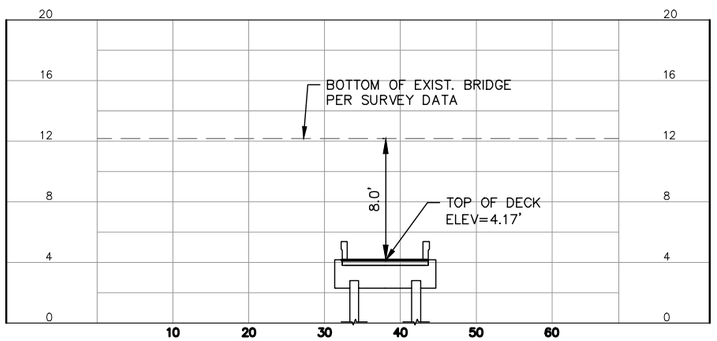

SCALE: HORZ. 1" = 20'
VERT. 1" = 10'

NOTES:

1. **REFER TO PRECAST CONCRETE BOARDWALK SYSTEM PLANS (BY DELEGATE ENGINEER) FOR ANCHOR BOLT PLACEMENT AND DETAILS, AND FOR DIMENSIONS NOT SHOWN.
2. ALL COMPOSITE TIMBER SHALL IN ACCORDANCE WITH SPECIFICATIONS ON SHEET B–15

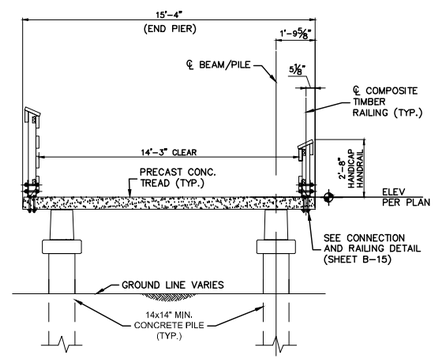

H / B–14A ACCESSIBLE HANDRAIL SECTION

NTS

NOTES:

1. **REFER TO PRECAST CONCRETE BOARDWALK SYSTEM PLANS (BY DELEGATE ENGINEER) FOR ANCHOR BOLT PLACEMENT AND DETAILS, AND FOR DIMENSIONS NOT SHOWN.
2. DESIGN OF PRECAST CONCRETE PIER AND BOAT DOCK BY OTHERS.
3. ALL COMPOSITE TIMBER IN ACCORDANCE WITH SPECIFICATIONS ON SHEET B–15

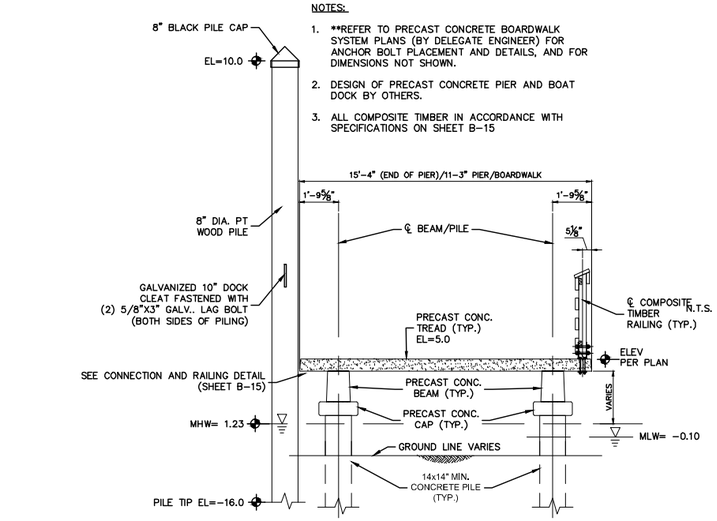

PRECAST CONCRETE PIER AND BOAT DOCK BENT ELEVATION WITH PILE

N.T.S.

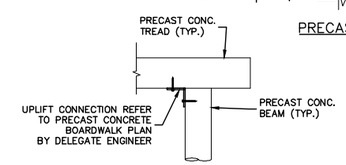

TYPICAL TREAD TO BEAM CONNECTION

N.T.S.

Notes:

RAILING NOT SHOWN FOR CLARITY

I / B–14A PIER AND BOAT DOCK DETAIL

NTS

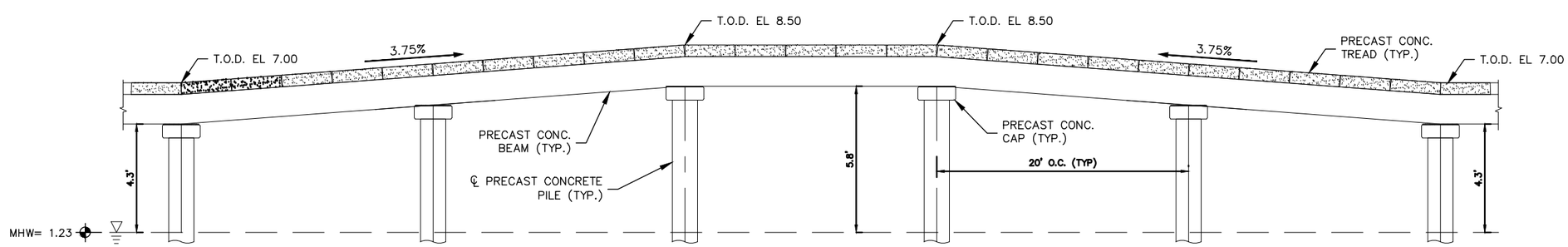

Notes:

RAILING NOT SHOWN FOR CLARITY

J / B–14A TYPICAL RAISED BOARDWALK SECTION

NTS

No.	REVISIONS	DATE	BY

Kimley»Horn
© 2014 KIMLEY–HORN AND ASSOCIATES, INC.
1777 MAIN STREET, SUITE 200, SARASOTA, FL 34236
PHONE: 941–379–7600
WWW.KIMLEY–HORN.COM CA 00000696

LICENSED PROFESSIONAL
PETER VAN BUSKIRK, P.E.
STATE OF FLORIDA
PROFESSIONAL ENGINEER
LICENSE NO. 39899
THIS ITEM HAS BEEN ELECTRONICALLY SIGNED AND SEALED BY PETER VAN BUSKIRK
ON 11/11/2016 USING A SHA-1 AUTHENTICATION CODE.
PRINTED COPIES OF THIS DOCUMENT ARE NOT CONSIDERED SIGNED AND SEALED AND THE SHA-1 AUTHENTICATION CODE MUST BE VERIFIED ON ANY ELECTRONIC COPIES

KHA PROJECT 048392.009	
DATE	OCT., 2014
SCALE	AS SHOWN
DESIGNED BY	KHA
DRAWN BY	KHA
CHECKED BY	KHA

MULTI-PURPOSE STRUCTURES SECTIONS AND DETAILS

HARBOR WALK PHASE 1B
PREPARED FOR
CHARLOTTE HARBOR COMMUNITY DEVELOPMENT AGENCY
CHARLOTTE COUNTY FLORIDA

SHEET NUMBER
B-14A
100% PLANS

Plotted By:Harvey, Christian Sheet Set:HarborWalk-Ph-1B Layout:B-14A MULTI-PURPOSE STRUCTURE SECTIONS AND DETAILS November 11, 2016 12:37:33pm K:\SAR_Civil\048392.009\CIVIL\CAD-Phase-1B\PlanSheets\B-9 MULTI-PURPOSE STRUCTURES PLAN.dwg
This document, together with the concepts and designs presented herein, as an instrument of service, is intended only for the specific purpose and client for which it was prepared. Reuse of and improper reliance on this document without written authorization and adaptation by Kimley-Horn and Associates, Inc. shall be without liability to Kimley-Horn and Associates, Inc.

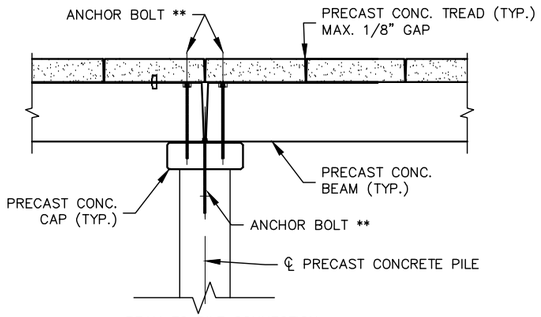

BEAM TO PILE CONNECTION
N.T.S.

Notes:

RAILING NOT SHOWN FOR CLARITY

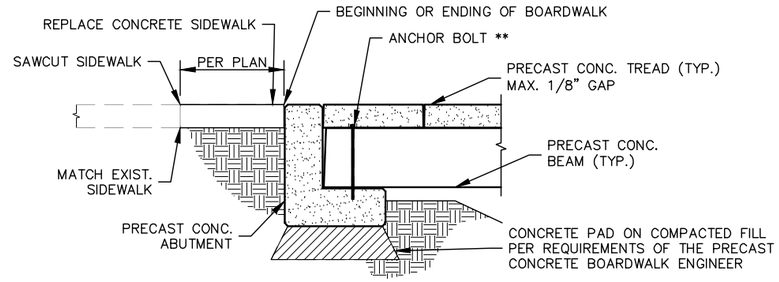

TYPICAL PRECAST ABUTMENT DETAIL
N.T.S.

Notes:

RAILING NOT SHOWN FOR CLARITY

NOTES:

1. **REFER TO PRECAST CONCRETE BOARDWALK SYSTEM PLANS (BY DELEGATE ENGINEER) FOR ANCHOR BOLT PLACEMENT AND DETAILS, AND FOR DIMENSIONS NOT SHOWN.
2. PRECAST CONCRETE BOARDWALK NOTES SHEET A-2 FOR ADDITIONAL DESIGN CRITERIA AND REQUIREMENTS.
3. SEE LUMBER RAILING NOTES THIS PAGE FOR WOOD AND BOARDWALK COMPOSITE LUMBER SPECIFICATIONS.
4. PRECAST PLANK TO BE 24 INCH WIDE WITH TIMBER TEXTURE AND TAN COLOR

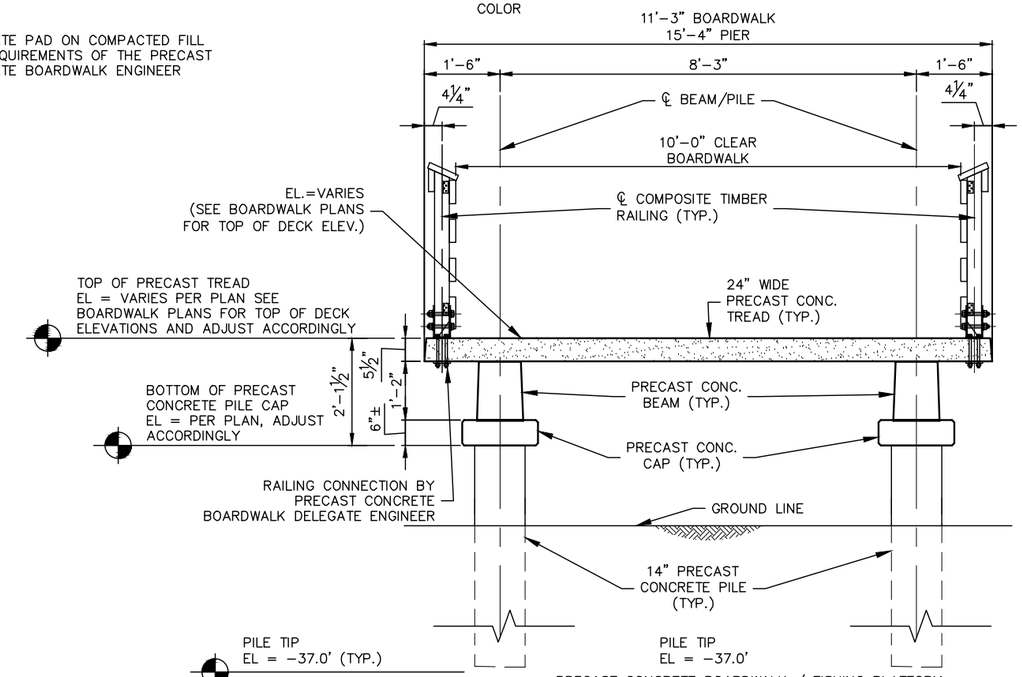

PRECAST CONCRETE BOARDWALK / FISHING PLATFORM
BENT ELEVATION
N.T.S.

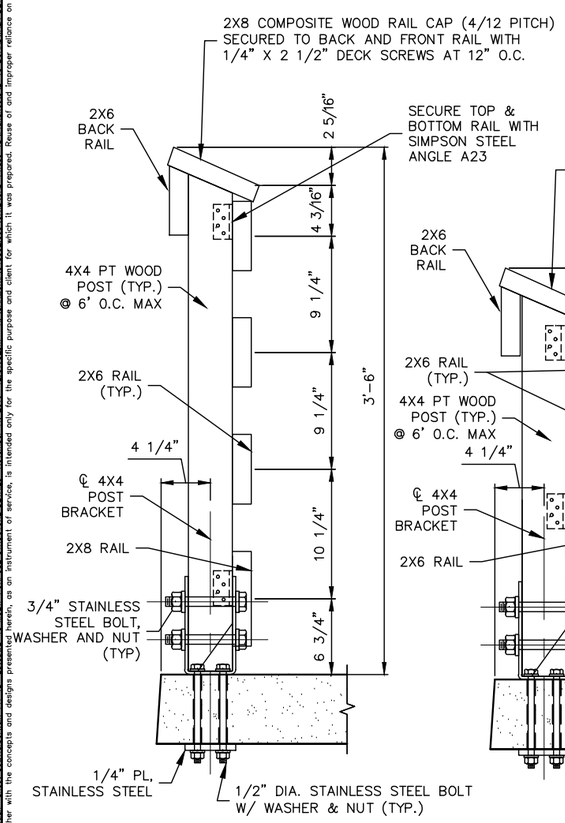

CONNECTION AND RAILING DETAIL
N.T.S.

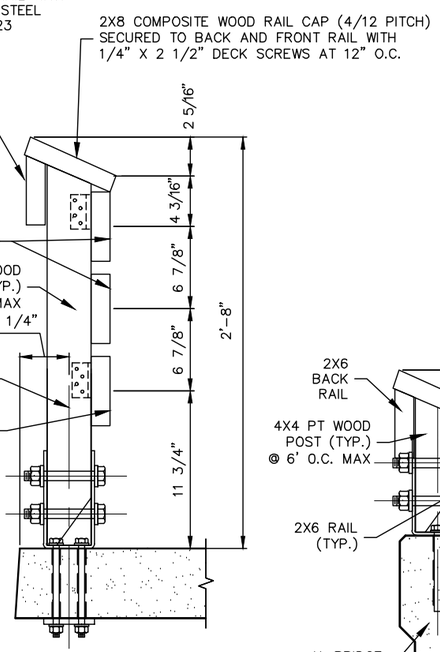

ACCESSIBLE RAILING DETAIL
ON FISHING PIER
N.T.S.

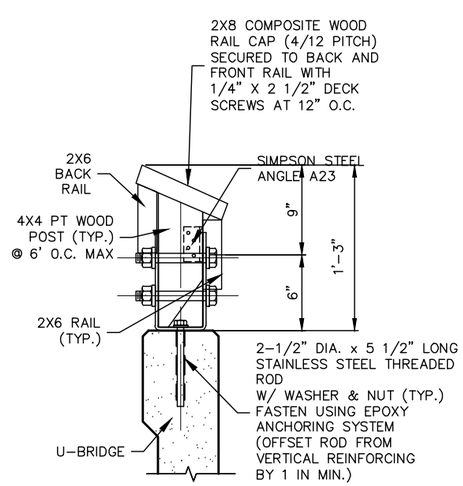

U-BRIDGE RAILING DETAIL
N.T.S.

TIMBER RAILING NOTES:

1. ALL TIMBER SHALL BE NO.2 GRADE SOUTHERN YELLOW PINE TREATED TO 0.15 MCQ. ALL FINISHED EDGES TO BE ROUNDED OVER.

2. ALL BOLT HOLES THRU TIMBER SHALL BE PREDRILLED 1/16" LARGER THAN THE BOLT DIAMETER.

3. POSTS SHALL RUN FULL HEIGHT AND NO SPLICING IS ALLOWED.

4. ALL RAILINGS SHALL BE CONTINUOUS OVER TWO SUPPORTS AND CONNECTED TO 4X4 POSTS WITH (2) 1/4" X 2 1/2" GALV. LAG SCREWS. STAGGER DISCONTINUITY POINTS WITH RAIL ABOVE AND BELOW.

5. FIELD PRESERVATIVE CHEMICALS SHALL BE APPLIED TO ALL FIELD CUTS AND DRILLED HOLES TO MAINTAIN TIMBER PRESSURE TREATMENT INTEGRITY.

6. RAILING WITH WANE OF 3/8" OR MORE MAY BE GROUNDS FOR REJECTION, REMOVAL AND REPLACEMENT.

7. ALL ANGLES AND STRUCTURAL PLATES SHALL BE STAINLESS STEEL.

8. TOP RAIL SHALL BE ATTACHED TO FRONT AND BACK RAIL WITH 1/4" X 2 1/2" STAINLESS STEEL DECK WOOD SCREWS @ 12" O.C.

9. SCREWS AND BOLTS ON THE "PEOPLE SIDE" OF THE RAILING SHALL BE FLUSH WITH THE SURFACE (OR BELOW) OR COUNTERSUNK.

10. ALL RAILS SHALL BE HDPE COMPOSITE LUMBER WITH MINIMUM DENSITY OF 40LB/FT, COMPRESSIVE STRENGTH OF 1,200 PSI, SHEAR STRENGTH OF 1,400 PSI AND FLEXURAL STRENGTH MODULUS OF 60,000 PSI.

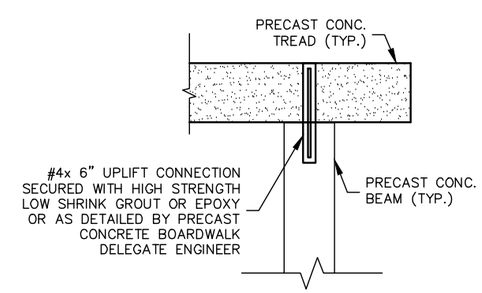

TYPICAL TREAD TO
BEAM CONNECTION
N.T.S.

Notes:

RAILING NOT SHOWN FOR CLARITY

No.	REVISIONS	DATE	BY
1	RAILING DETAILS REV.	11/24/15	

Kimley»Horn

© 2014 KIMLEY-HORN AND ASSOCIATES, INC.
1777 MAIN STREET, SUITE 200, SARASOTA, FL 34236
PHONE: 941-379-7600
WWW.KIMLEY-HORN.COM CA 00000696

LICENSED PROFESSIONAL
PETER VAN BUSKIRK, P.E.
STATE OF FLORIDA
PROFESSIONAL ENGINEER
LICENSE NO. 39899
THIS ITEM HAS BEEN ELECTRONICALLY SIGNED AND SEALED BY PETER VAN BUSKIRK ON 11/17/2015 USING A SHA-1 AUTHENTICATION CODE.
PRINTED COPIES OF THIS DOCUMENT ARE NOT CONSIDERED SIGNED AND SEALED AND THE SHA-1 AUTHENTICATION CODE MUST BE VERIFIED ON ANY ELECTRONIC COPIES

KHA PROJECT	048392.009
DATE	OCT., 2014
SCALE	AS SHOWN
DESIGNED BY	KHA
DRAWN BY	KHA
CHECKED BY	KHA

MULTI-PURPOSE STRUCTURE DETAILS

HARBOR WALK PHASE 1B
PREPARED FOR
CHARLOTTE HARBOR
COMMUNITY
DEVELOPMENT AGENCY
CHARLOTTE COUNTY FLORIDA

SHEET NUMBER
B-15
100% PLANS

Plotted By:Lopez, Christian Sheet Set:Harborwalk-Phase1B Layout:B-15 MULTI-PURPOSE STRUCTURE DETAILS November 11, 2014 12:47:52pm G:\SAS Civil\048392.009\CIVIL\CAD\Phase 1B\Dgns\Sheets\B-15.dwg
This document, together with the concepts and designs presented herein, as an instrument of service, is intended only for the specific purpose and client for which it was prepared. Reuse of and improper reliance on this document without written authorization and adaptation by Kimley-Horn and Associates, Inc. shall be without liability to Kimley-Horn and Associates, Inc.

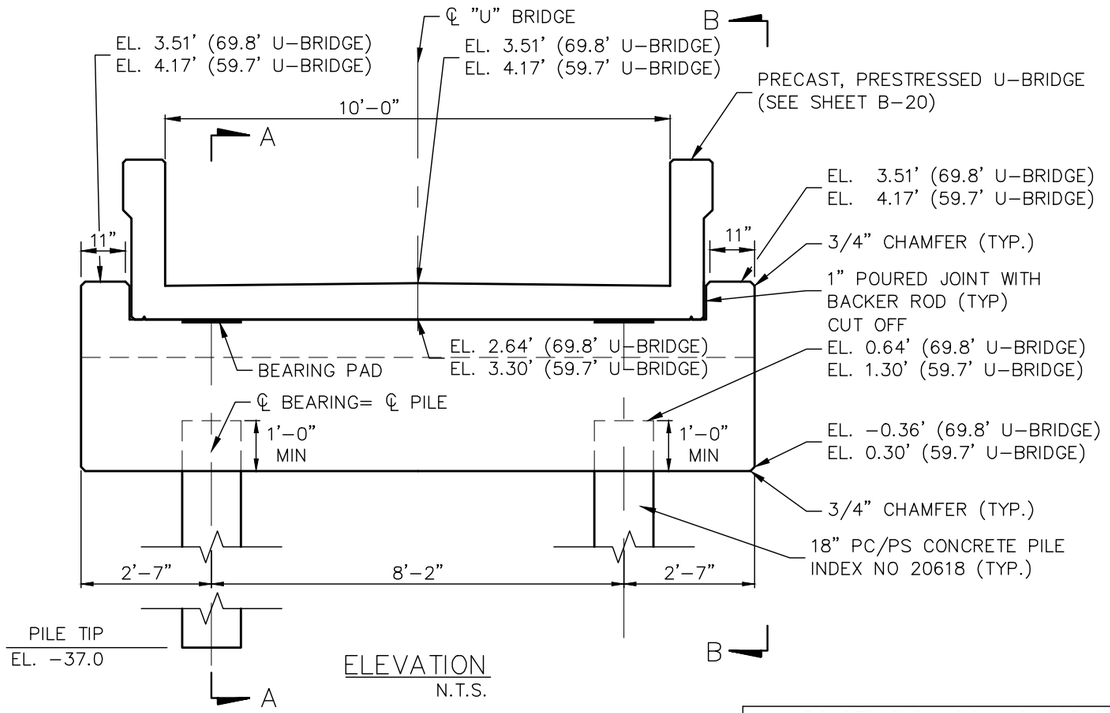

ELEVATION
N.T.S.

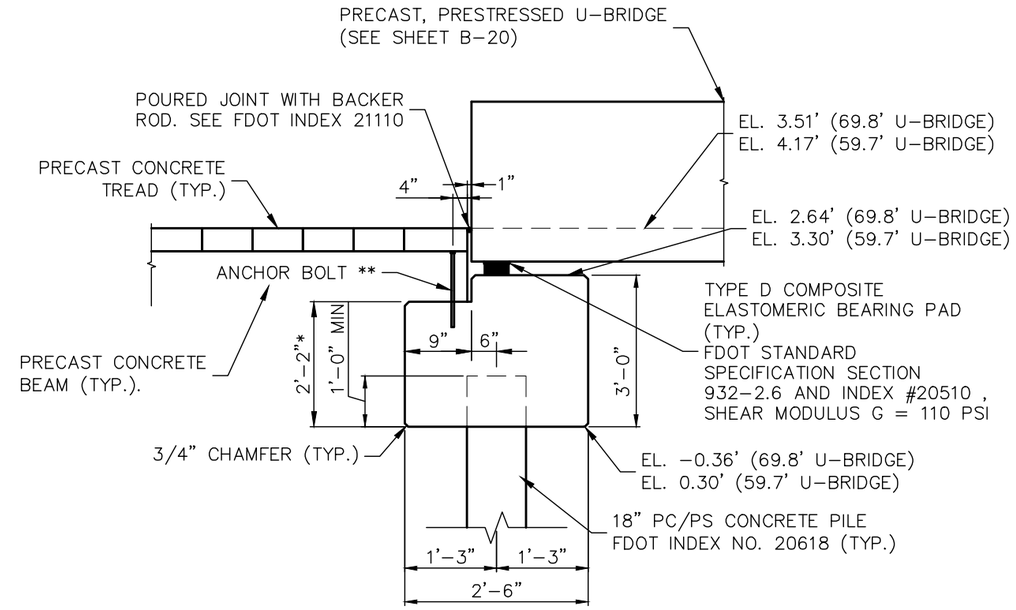

SECTION A-A
N.T.S.

Note:
RAILING NOT SHOWN FOR CLARITY

POURED EXPANSION JOINT DATA TABLE
INDEX NO. 21110

LOCATION	DIM. "A" @ 70°F	TOTAL DESIGN MOVEMENT	DIM. "A" ADJUSTMENT PER 10°F
END OF BRIDGE	0'-1"	0'-0.1800"	0'-0.0250"

Note:
DIM "A" ADJUSTMENT PER 10°F SHOWN IS MEASURED PERPENDICULAR TO ℄ EXPANSION JOINT. WORK THIS TABLE WITH DESIGN STANDARDS INDEX NO.21110

* VERIFY REQUIRED DIMENSION WITH ENGINEER PRIOR TO FABRICATION AND CONSTRUCTION SUCH THAT BOARDWALK DECK IS FLUSH WITH U-BRIDGE DECK.

Note:
RAILING NOT SHOWN FOR CLARITY

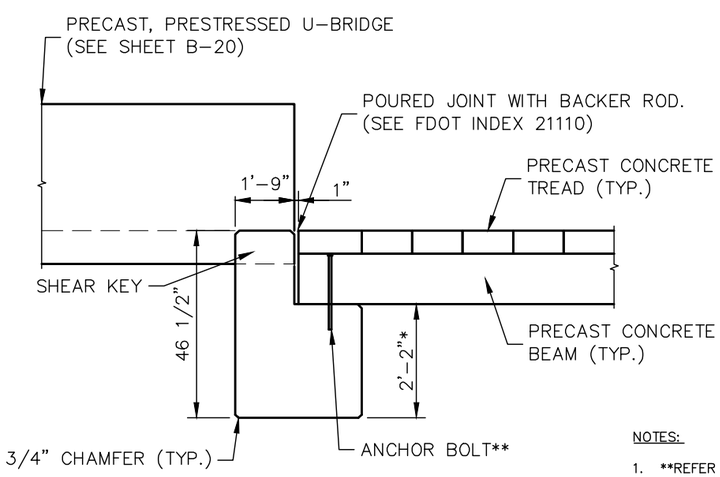

SECTION B-B
N.T.S.

NOTES:

1. **REFER TO PRECAST CONCRETE BOARDWALK SYSTEM PLANS (BY OTHERS) FOR ANCHOR BOLT PLACEMENT AND DETAILS, AND FOR DIMENSIONS NOT SHOWN.
2. PRECAST CONCRETE BOARDWALK NOTES SHEET A-2 FOR ADDITIONAL DESIGN CRITERIA AND REQUIREMENTS.
3. SEE LUMBER RAILING NOTES THIS PAGE FOR WOO AND BOARDWALK COMPOSITE SPECIFICATIONS.
4. PRECAST PLANK TO BE 24 INCH WIDE WITH TIMBER TEXTURE AND TAN COLOR

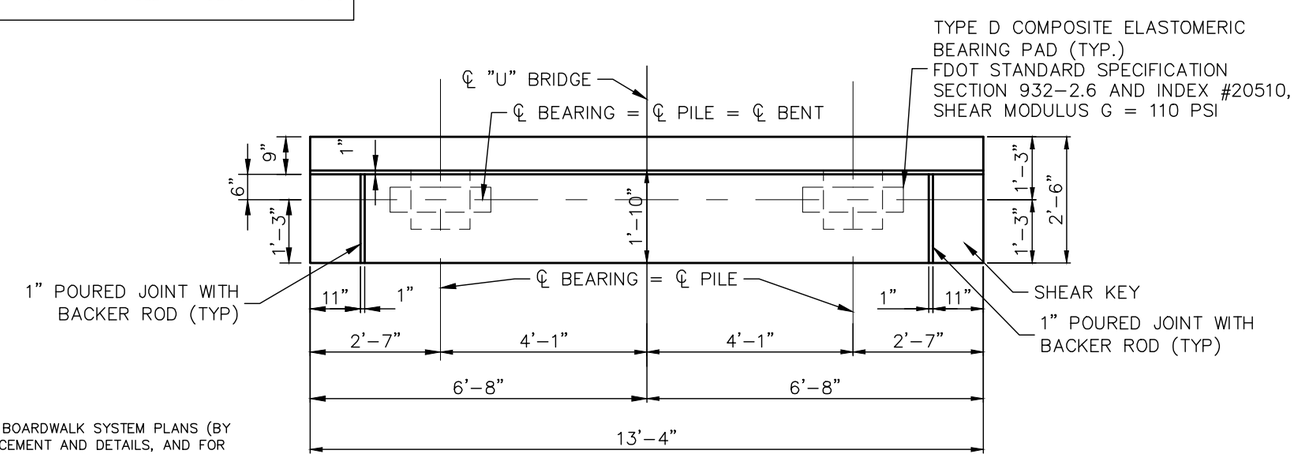

END BENT PLAN
N.T.S.

No.	REVISIONS	DATE	BY
1	ELEVATION REVISED	11/24/15	

Kimley»Horn
© 2014 KIMLEY-HORN AND ASSOCIATES, INC.
1777 MAIN STREET, SUITE 200, SARASOTA, FL 34236
PHONE: 941-379-7600
WWW.KIMLEY-HORN.COM CA 00000696

LICENSED PROFESSIONAL
PETER VAN BUSKIRK, P.E.
STATE OF FLORIDA
PROFESSIONAL ENGINEER
LICENSE NO. 38859
THIS ITEM WAS SIGNED ELECTRONICALLY SEALED AND DATED
BY PETER VAN BUSKIRK
ON 11/17/2015 USING A SECURE ELECTRONIC AUTHENTICATION CODE.
PRINTED COPIES OF THIS DOCUMENT WERE NOT SEALED AND THE SECURE AUTHENTICATION CODE MUST BE VERIFIED ON ANY ELECTRONIC COPIES

KHA PROJECT 048392.009
DATE OCT., 2014
SCALE AS SHOWN
DESIGNED BY KHA
DRAWN BY KHA
CHECKED BY KHA

END BENT LAYOUT

HARBOR WALK PHASE 1B
PREPARED FOR
CHARLOTTE HARBOR
COMMUNITY
DEVELOPMENT AGENCY
CHARLOTTE COUNTY FLORIDA

SHEET NUMBER
B-16
100% PLANS

Posted Reference Question: Sheet Set:Harborwalk-Ph-1B Layout:B-16 END BENT LAYOUT November 11, 2016 12:36:11pm K:\SAR-Civil\048392.009\Civil\CAD-Phase-1B\PlanSheets\B-16 END BENT LAYOUT.dwg
This document, together with the concepts and designs presented herein, as an instrument of service, is intended only for the specific purpose and client for which it was prepared. Reuse of and improper reliance on this document without written authorization and adaptation by Kimley-Horn and Associates, Inc. shall be without liability to Kimley-Horn and Associates, Inc.

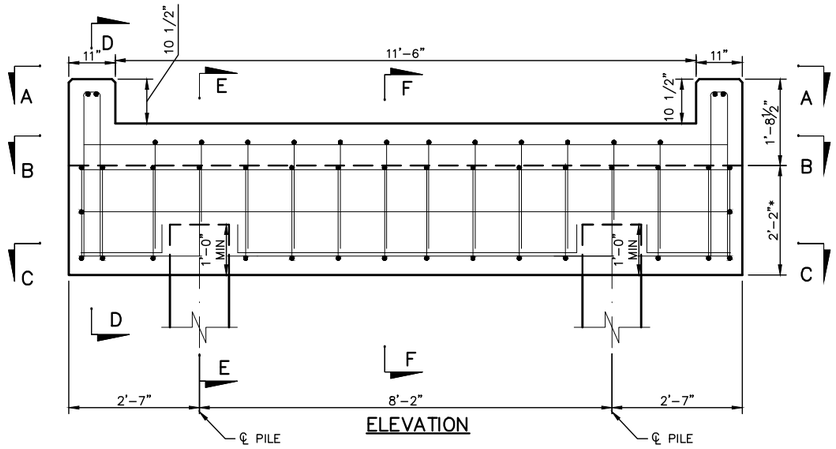

ELEVATION

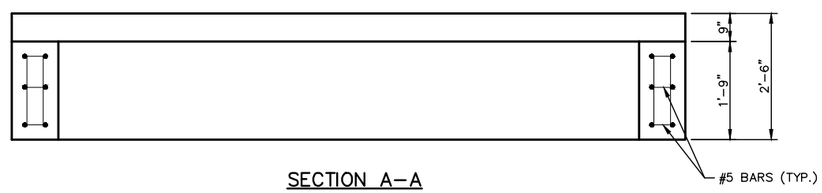

SECTION A–A

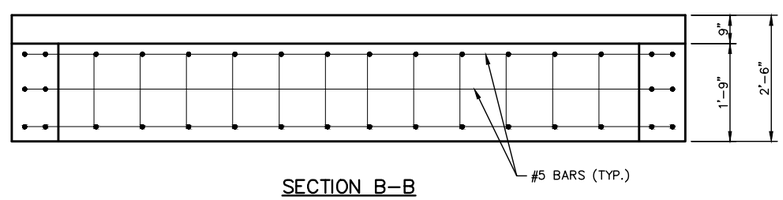

SECTION B–B

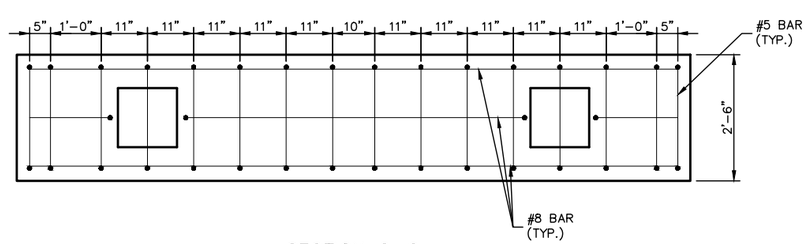

SECTION C–C

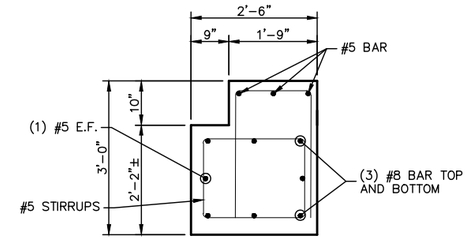

SECTION F–F

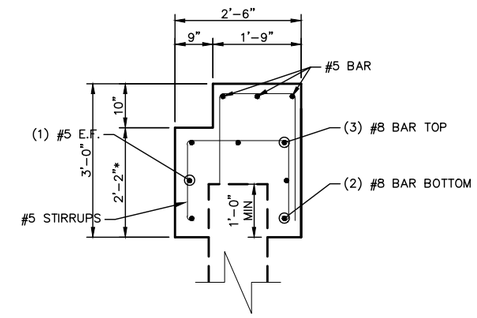

SECTION E–E

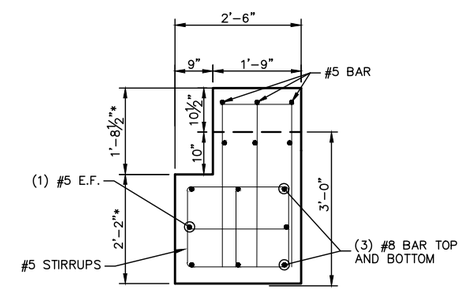

SECTION D–D

CONCRETE COVER:

UNLESS NOTED OTHERWISE, CONCRETE COVER SHALL CONFORM TO THE FOLLOWING:

PRECAST U–BEAM	2"
SUBSTRUCTURE (CAST–IN–PLACE) – ALL BRIDGES	
END BENT CAPS CAST AGAINST EARTH/IN CONTACT WITH WATER	4.5"
END BENT CAPS FORMED SURFACES NOT IN CONTACT WITH WATER	4"
SIDEWALKS	2"

NOTE:
CONCRETE COVERS SHOWN IN THE PLANS DO NOT INCLUDE PLACEMENT AND FABRICATION TOLERANCES UNLESS SHOWN AS "MINIMUM COVER". SEE FDOT STANDARD SPECIFICATIONS FOR ALLOWABLE TOLERANCES.

* VERIFY REQUIRED DIMENSION WITH PRECAST CONCRETE BOARDWALK ENGINEER PRIOR TO FABRICATION AND CONSTRUCTION SUCH THAT BOARDWALK DECK IS FLUSH WITH U–BRIDGE DECK.

No.	REVISIONS	DATE	BY
1	ELEVATION AND SECTIONS REV.	11/24/15	

Kimley»Horn
© 2014 KIMLEY–HORN AND ASSOCIATES, INC.
1777 MAIN STREET, SUITE 200, SARASOTA, FL 34236
PHONE: 941–379–7600
WWW.KIMLEY–HORN.COM CA 00000696

LICENSED PROFESSIONAL
PETER VAN BUSKIRK, P.E.
STATE OF FLORIDA
PROFESSIONAL ENGINEER
LICENSE NO. 39899
THIS ITEM HAS BEEN ELECTRONICALLY SIGNED AND SEALED
BY PETER VAN BUSKIRK
ON 11/17/2016 USING A SECURE SHA-1 AUTHENTICATION CODE.
PRINTED COPIES OF THIS DOCUMENT ARE NOT CONSIDERED SIGNED AND SEALED AND MAY NOT BE AUTHENTICATED USING THE SHA-1 AUTHENTICATION CODE ON ANY ELECTRONIC COPIES

KHA PROJECT 048392.009	
DATE	OCT., 2014
SCALE	AS SHOWN
DESIGNED BY	KHA
DRAWN BY	KHA
CHECKED BY	KHA

END BENT DETAILS

HARBOR WALK PHASE 1B
PREPARED FOR
CHARLOTTE HARBOR COMMUNITY DEVELOPMENT AGENCY
CHARLOTTE COUNTY FLORIDA

SHEET NUMBER
B-17
100% PLANS

Plotted By:Kevin Christian Sheet Set:Structure Plans Layout:B-17 END BENT DETAILS November 11, 2016 12:38:30pm K:\SAR_CLW\048392.009\CLW\KAH-Phase-1B\Dwg Sheets\B-17 END BENT DETAILS.dwg
This document, together with the concepts and designs presented herein, as an instrument of service, is intended only for the specific purpose and client for which it was prepared. Reuse of and improper reliance on this document without written authorization and adaptation by Kimley-Horn and Associates, Inc. shall be without liability to Kimley-Horn and Associates, Inc.

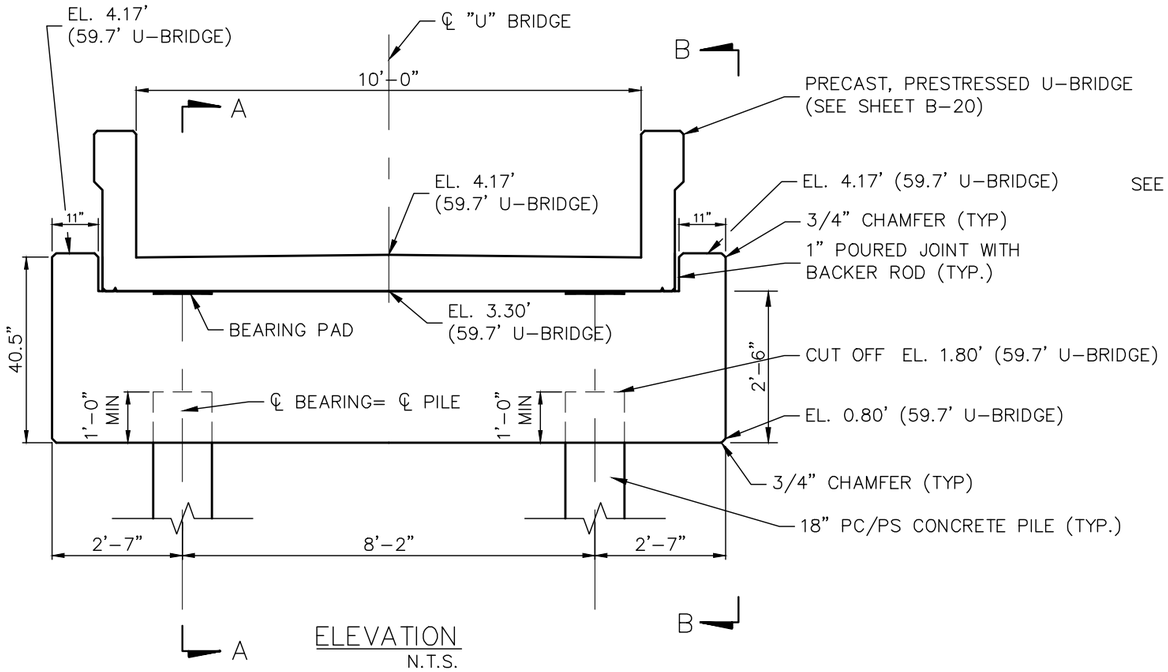

ELEVATION
N.T.S.

Note:

RAILING NOT SHOWN FOR CLARITY

POURED EXPANSION JOINT DATA TABLE INDEX NO. 21110			
LOCATION	DIM. "A" @ 70°F	TOTAL DESIGN MOVEMENT	DIM. "A" ADJUSTMENT PER 10°F
END OF BRIDGE	0'-1"	0'-0.1800"	0'-0.0250"

Note:
DIM "A" ADJUSTMENT PER 10°F SHOWN IS MEASURED PERPENDICULAR TO ℄ EXPANSION JOINT. WORK THIS TABLE WITH DESIGN STANDARDS INDEX NO.21110

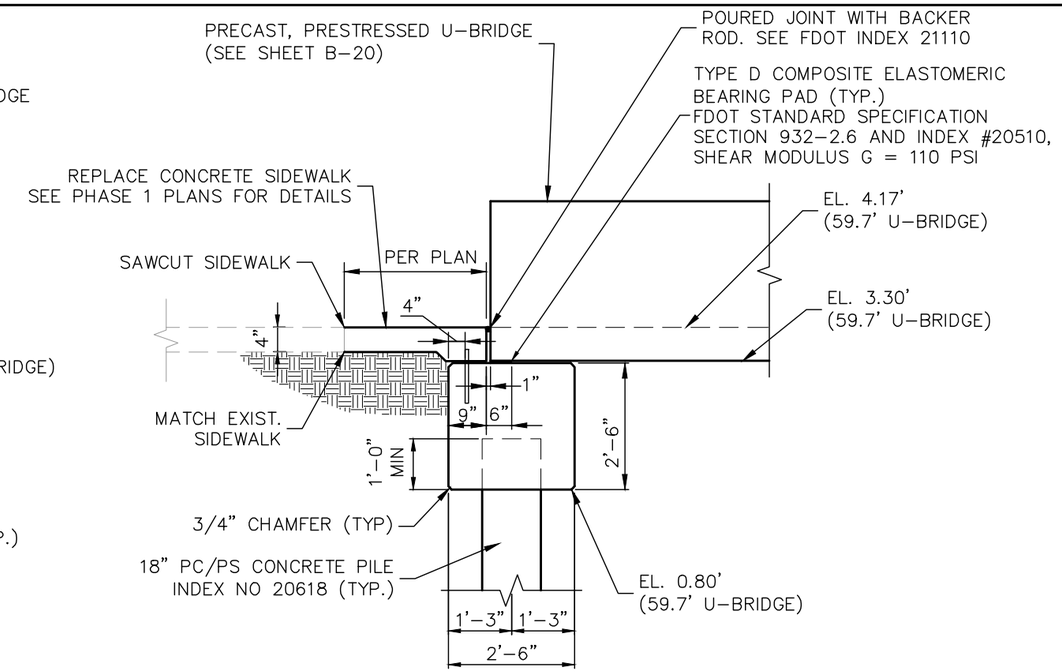

SECTION A-A
N.T.S.

Note:

RAILING NOT SHOWN FOR CLARITY

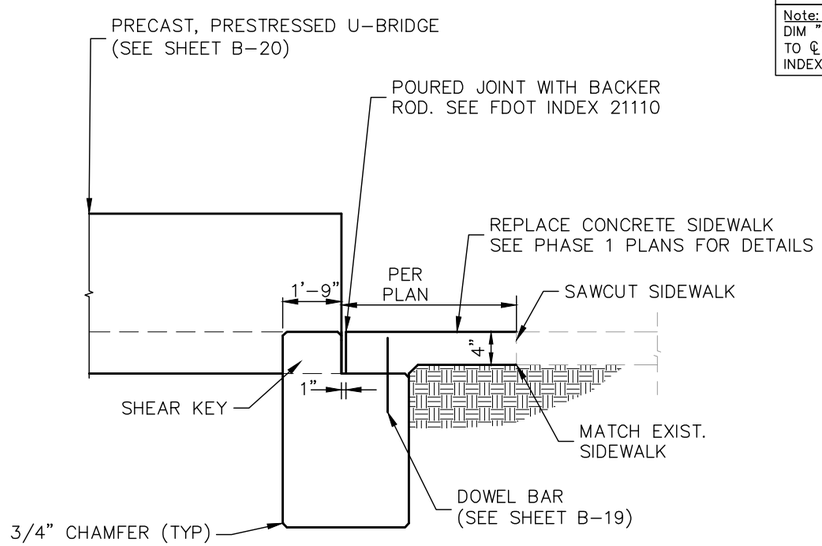

SECTION B-B
N.T.S.

Note:

RAILING NOT SHOWN FOR CLARITY

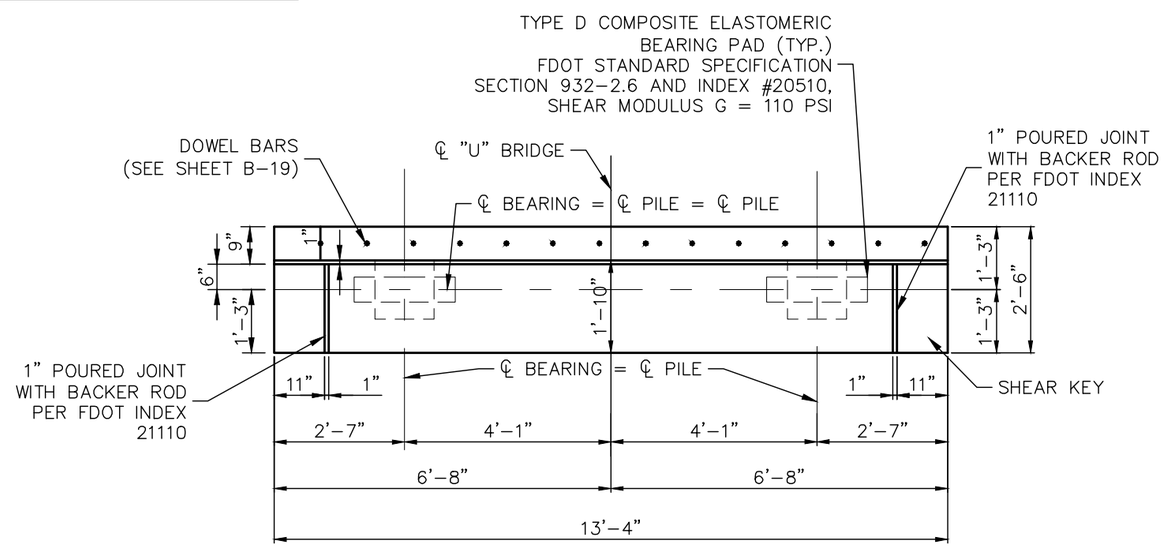

ABUTMENT PLAN
N.T.S.

No.	REVISIONS	DATE	BY
1	DIMENSIONS REV.	11/24/15	

Kimley»Horn
© 2014 KIMLEY-HORN AND ASSOCIATES, INC.
1777 MAIN STREET, SUITE 200, SARASOTA, FL 34236
PHONE: 941-379-7600
WWW.KIMLEY-HORN.COM CA 00000696

LICENSED PROFESSIONAL
PETER VAN BUSKIRK, P.E.
STATE OF FLORIDA
PROFESSIONAL ENGINEER
LICENSE NO. 78899
THIS ITEM HAS BEEN ELECTRONICALLY SIGNED AND SEALED BY PETER VAN BUSKIRK
ON 11/17/2016 USING A SHA-1 AUTHENTICATION CODE.
PRINTED COPIES OF THIS DOCUMENT ARE NOT CONSIDERED SIGNED AND SEALED AND THE SHA-1 AUTHENTICATION CODE MUST BE VERIFIED ON ANY ELECTRONIC COPIES

KHA PROJECT 048392.009	
DATE OCT., 2014	
SCALE AS SHOWN	
DESIGNED BY KHA	
DRAWN BY KHA	
CHECKED BY KHA	

ABUTMENT LAYOUT

HARBOR WALK PHASE 1B
PREPARED FOR
CHARLOTTE HARBOR
COMMUNITY
DEVELOPMENT AGENCY
CHARLOTTE COUNTY FLORIDA

SHEET NUMBER
B-18
100% PLANS

Plotted By:kevin.Quisblan Sheet:SaltlakeWalk-Ph1-1B Layout:B-18 ABUTMENT LAYOUT November 11, 2016 12:36:48pm K:\SAB_Civil\048392.009\civil\CAD-Phase-1B\Plan Sheets\B-18 ABUTMENT LAYOUT.dwg
This document, together with the concepts and designs presented herein, as an instrument of service, is intended only for the specific purpose and client for which it was prepared. Reuse of and improper reliance on this document without written authorization and adaptation by Kimley-Horn and Associates, Inc. shall be without liability to Kimley-Horn and Associates, Inc.

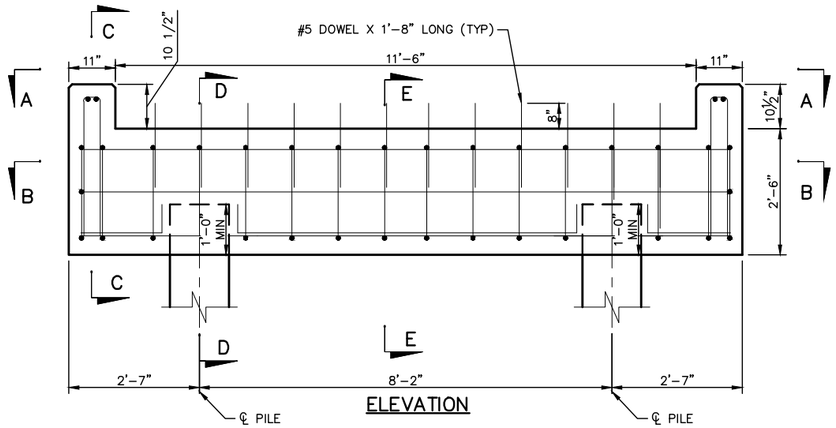

ELEVATION

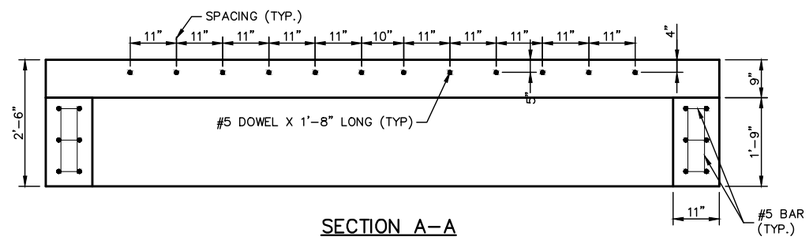

SECTION A–A

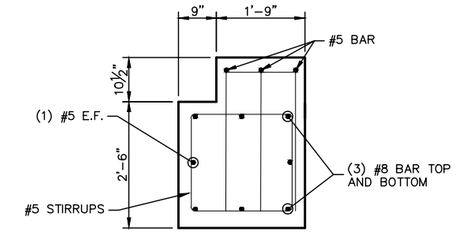

SECTION C–C

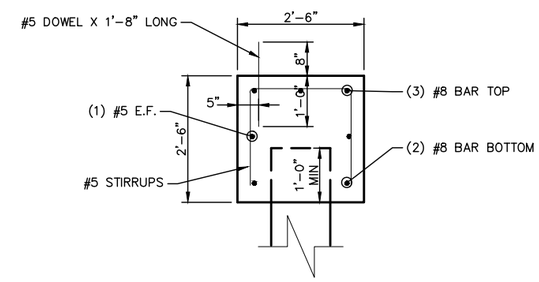

SECTION D–D

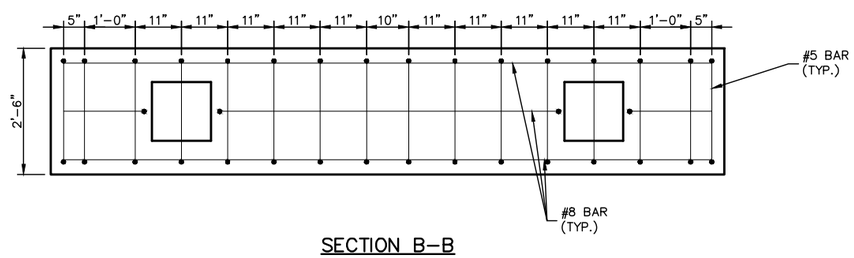

SECTION B–B

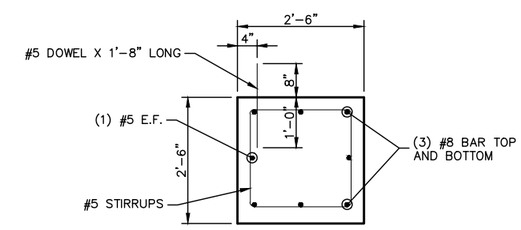

SECTION E–E

CONCRETE COVER:

UNLESS NOTED OTHERWISE, CONCRETE COVER SHALL CONFORM TO THE FOLLOWING:

PRECAST U–BEAM	2"
SUBSTRUCTURE (CAST–IN–PLACE) – ALL BRIDGES	
END BENT CAPS CAST AGAINST EARTH/IN CONTACT WITH WATER	4.5"
END BENT CAPS FORMED SURFACES NOT IN CONTACT WITH WATER	4"
SIDEWALKS	2"

NOTE:
CONCRETE COVERS SHOWN IN THE PLANS DO NOT INCLUDE PLACEMENT AND FABRICATION TOLERANCES UNLESS SHOWN AS "MINIMUM COVER". SEE FDOT STANDARD SPECIFICATIONS FOR ALLOWABLE TOLERANCES.

No.	REVISIONS	DATE	BY
1	DIMENSIONS REV.	11/24/15	

Kimley»Horn

© 2014 KIMLEY–HORN AND ASSOCIATES, INC.
1777 MAIN STREET, SUITE 200, SARASOTA, FL 34236
PHONE: 941–379–7600
WWW.KIMLEY–HORN.COM CA 00000696

LICENSED PROFESSIONAL
PETER VAN BUSKIRK, P.E.
STATE OF FLORIDA
PROFESSIONAL ENGINEER
LICENSE NO. 39899
THIS ITEM HAS BEEN ELECTRONICALLY SIGNED AND SEALED BY PETER VAN BUSKIRK
ON 11/17/2016 USING A SHA1 AUTHENTICATION CODE.
PRINTED COPIES OF THIS DOCUMENT ARE NOT CONSIDERED SIGNED AND SEALED AND MAY NOT CONTAIN AN AUTHENTICATION CODE. VERIFY ON ELECTRONIC COPIES

KHA PROJECT 048392.009	
DATE	OCT., 2014
SCALE	AS SHOWN
DESIGNED BY	KHA
DRAWN BY	KHA
CHECKED BY	KHA

ABUTMENT DETAILS

HARBOR WALK PHASE 1B
PREPARED FOR
CHARLOTTE HARBOR COMMUNITY DEVELOPMENT AGENCY
CHARLOTTE COUNTY FLORIDA

SHEET NUMBER
B-19
100% PLANS

Plotted By:Kevin Christian Sheet Set:Harbor Walk PH-1B Layout:B-19 ABUTMENT DETAILS November 11, 2016 12:38:51pm K:\SAR_CIVil\048392.009\CIVil\CAD-Phase 1B\PlanSheets\B-19 ABUTMENT DETAILS.dwg
This document, together with the concepts and designs presented herein, as an instrument of service, is intended only for the specific purpose and client for which it was prepared. Reuse of and Improper reliance on this document without written authorization and adaptation by Kimley-Horn and Associates, Inc. shall be without liability to Kimley-Horn and Associates, Inc.

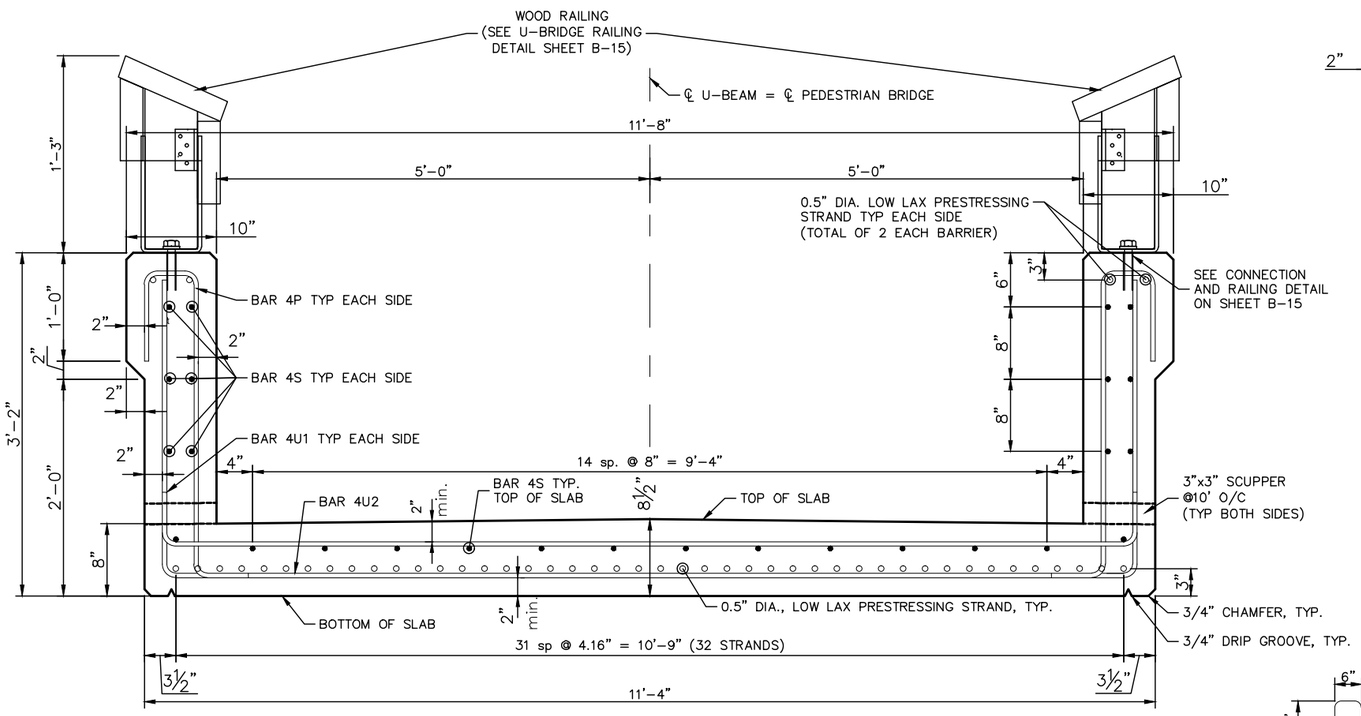

TYPICAL SECTION

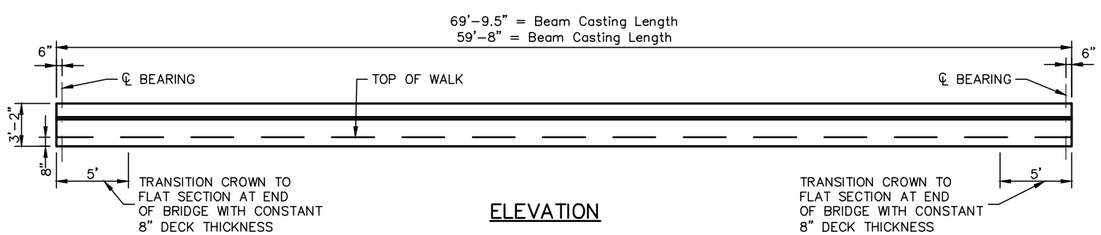

ELEVATION

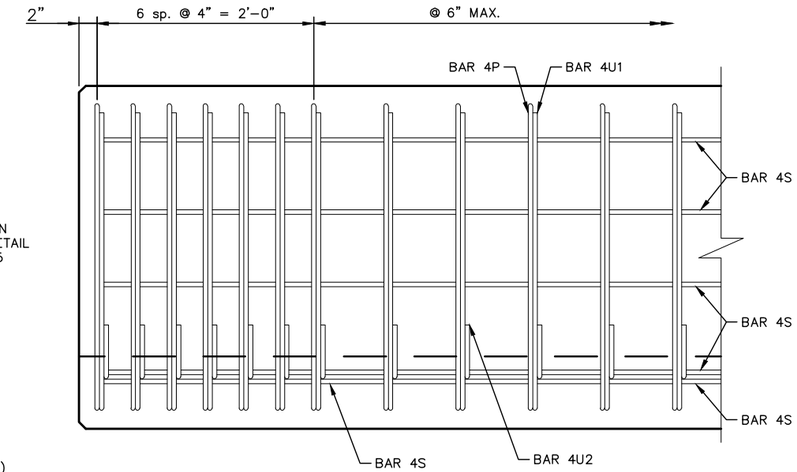

ELEVATION AT END OF BEAM

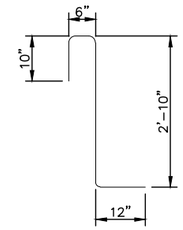

BAR 4P

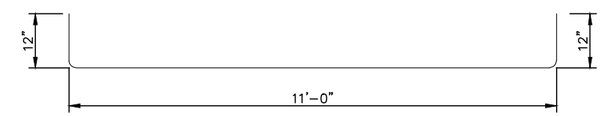

BAR 4U2

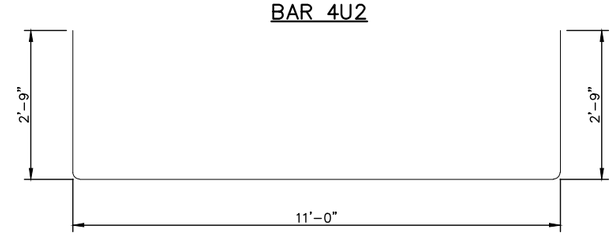

BAR 4U1

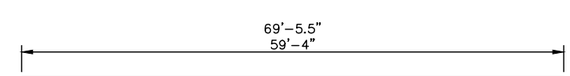

BAR 4S

Notes:

1) All reinforcing steel dimensions are out to out.

2) 0.5"Ø Prestressed Strands shall be ASTM A416, Grade 270 seven-wire low relaxation strands, stressed to 30980 lbs each.

3) Cut wedge to recess Prestress Strands at the end of the beam after detensioning without damaging the surrounding concrete, see "Strand Recess Detail on FDOT Standard Index 20010 sheet 2 of 2 dated 07/01/14.

4) Epoxy coat ends of beams, including clipped and chamfer surfaces, with two layers of Type F-1 epoxy compund within 7 days of detensioning. Prepare concrete surface and apply in accordance with the manufacturer's recommendations. The finish thickness of the epoxy coating must be a minimum 1/16".

5) Beam concrete shall be Class VI, f'c = 8500 psi with a minimum release strength of f'ci = 6500 psi.

6) Beam shall conform to Section 450 of the Standard Specifications.

7) Anticipated camber of 69'-9.5" beam after release of prestress at centerline of of span is 0.796" (downward). This is the net camber of the dead load (1.133" downward) and the prestressing camber (0.337" upward). The fabricator shall add additional camber to the beam to eliminate the net downward camber and should anticipate a long term creep coefficient of 3.0 in determining the final beam camber beyond 120 days.

8) Anticipated camber of 59'-8" beam after release of prestress at centerline of of span is 0.356" (downward). This is the net camber of the dead load camber (0.6" downward) and the prestressing camber (0.244" upward). The fabricator shall add additional camber to the beam to eliminate the net downward camber and should anticipate a long term creep coefficient of 3.0 in determining the final beam camber beyond 120 days.

9) Do not release strands prior to casting the concrete barriers (i.e. sides of U-Beam) and prior to all concrete reaching f'ci.

No.	REVISIONS	DATE	BY
1	DIMENSIONS REV.	11/24/15	

Kimley»Horn
© 2014 KIMLEY-HORN AND ASSOCIATES, INC.
1777 MAIN STREET, SUITE 200, SARASOTA, FL 34236
PHONE: 941-379-7600
WWW.KIMLEY-HORN.COM CA 00000696

LICENSED PROFESSIONAL
PETER VAN BUSKIRK, P.E.
STATE OF FLORIDA
PROFESSIONAL ENGINEER
LICENSE NO. 39899
THIS ITEM HAS BEEN ELECTRONICALLY SIGNED AND SEALED BY PETER VAN BUSKIRK
ON 11/17/2016 USING A SHA-1 AUTHENTICATION CODE.
PRINTED COPIES OF THIS DOCUMENT ARE NOT CONSIDERED SIGNED AND SEALED AND THE SHA-1 AUTHENTICATION CODE MUST BE VERIFIED ON ANY ELECTRONIC COPIES

KHA PROJECT	048392.009
DATE	OCT., 2014
SCALE	AS SHOWN
DESIGNED BY	KHA
DRAWN BY	KHA
CHECKED BY	KHA

U-BRIDGE

HARBOR WALK PHASE 1B
PREPARED FOR
CHARLOTTE HARBOR
COMMUNITY
DEVELOPMENT AGENCY
CHARLOTTE COUNTY FLORIDA

SHEET NUMBER
B-20
100% PLANS

Plotted By:Kevin Chisholm Sheet Set:Sheet Set:Phase-1B Layout:B-20 U-BRIDGE November 11, 2016 12:39:15pm K:\SAR-Civil\048392.009\Civil\CAD-Phase-1B\PlanSheets\B-20 U-BEAM.dwg
Reuse of and improper reliance on this document without written authorization and adaptation by Kimley-Horn and Associates, Inc. shall be without liability to Kimley-Horn and Associates, Inc.
This document, together with the concepts and designs presented herein, as an instrument of service, is intended only for the specific purpose and client for which it was prepared.

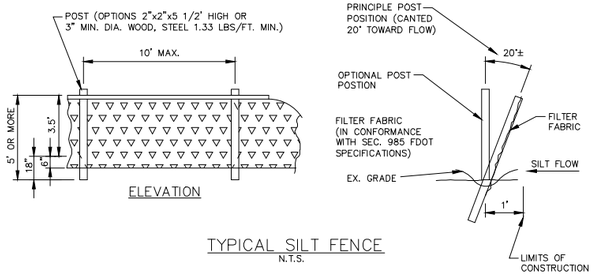

TYPICAL SILT FENCE
N.T.S.

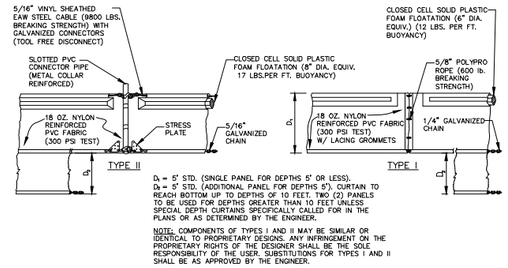

FLOATING TURBIDITY BARRIERS
N.T.S.

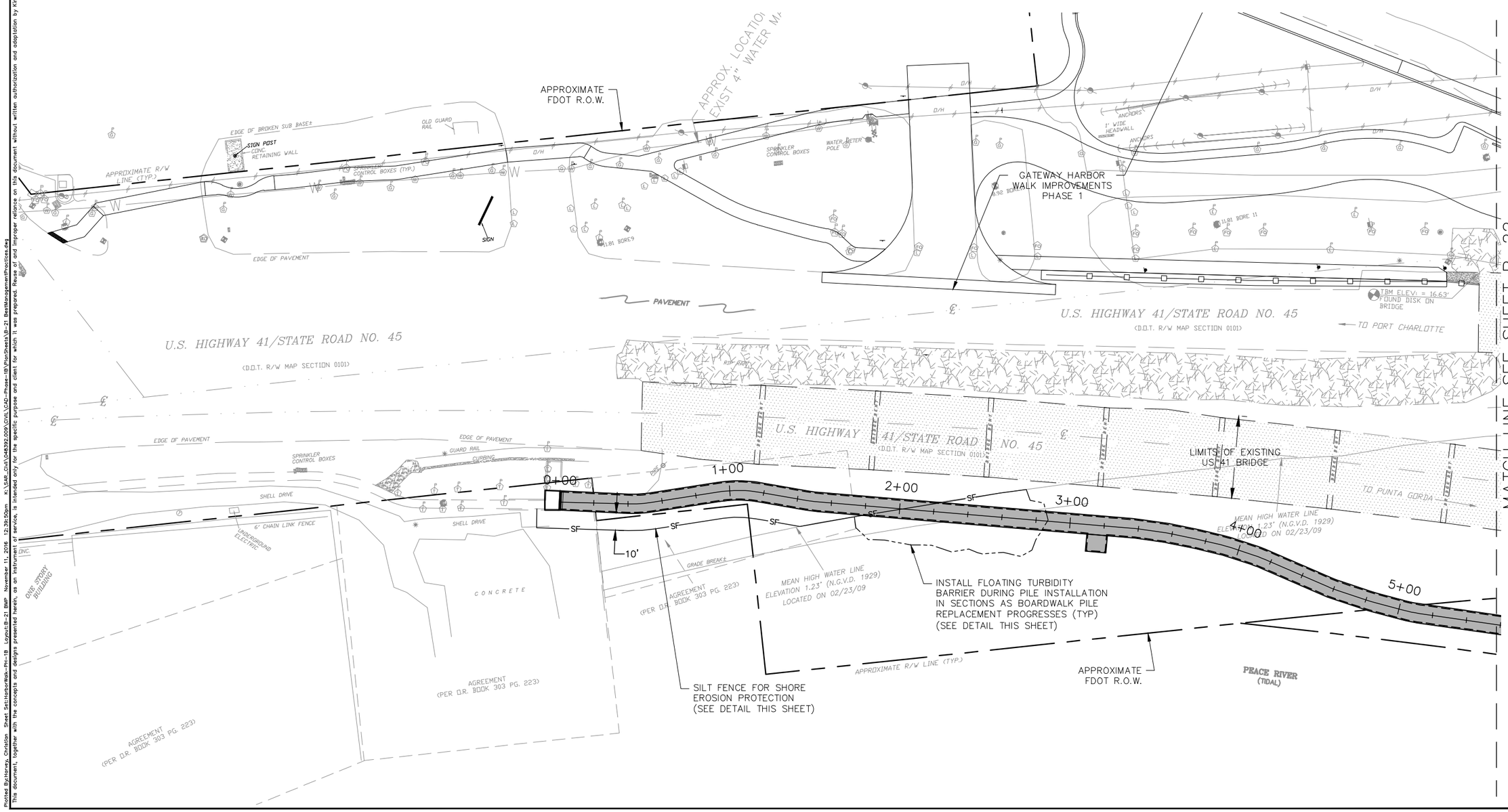

No.	REVISIONS	DATE	BY

Kimley»Horn
© 2014 KIMLEY-HORN AND ASSOCIATES, INC.
1777 MAIN STREET, SUITE 200, SARASOTA, FL 34236
PHONE: 941-379-7600
WWW.KIMLEY-HORN.COM CA 00000696

LICENSED PROFESSIONAL
PETER VAN BUSKIRK, P.E.
STATE OF FLORIDA
PROFESSIONAL ENGINEER
LICENSE NO. 38859

THIS ITEM WAS SIGNED ELECTRONICALLY BY PETER VAN BUSKIRK ON 11/17/2014 USING A SECURE AUTHENTICATION CODE. PRINTED COPIES OF THIS DOCUMENT WERE NOT SIGNED AND THE SHA2 AUTHENTICATION CODE MUST BE VERIFIED ON ANY ELECTRONIC COPIES

SHEET B-22

KHA PROJECT	048392.009
DATE	OCT., 2014
SCALE	AS SHOWN
DESIGNED BY	KHA
DRAWN BY	KHA
CHECKED BY	KHA

BEST MANAGEMENT PRACTICES PLAN

HARBOR WALK PHASE 1B
PREPARED FOR
CHARLOTTE HARBOR COMMUNITY DEVELOPMENT AGENCY
CHARLOTTE COUNTY FLORIDA

SHEET NUMBER
B-21
100% PLANS

Plotted By:Horsley, Christian Sheet Set:HarborWalk-PH-1B Layout:B-21 BMP November 11, 2016 12:39:50pm K:\SAR_Civil\048392.009\Civil\CAD-Phase-1B\PlanSheets\B-21 BestManagementPractices.dwg
This document, together with the concepts and designs presented herein, as an instrument of service, is intended only for the specific purpose and client for which it was prepared. Reuse of and improper reliance on this document without written authorization and adaptation by Kimley-Horn and Associates, Inc. shall be without liability to Kimley-Horn and Associates, Inc.

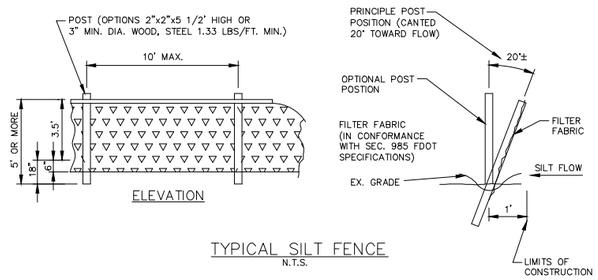

TYPICAL SILT FENCE
N.T.S.

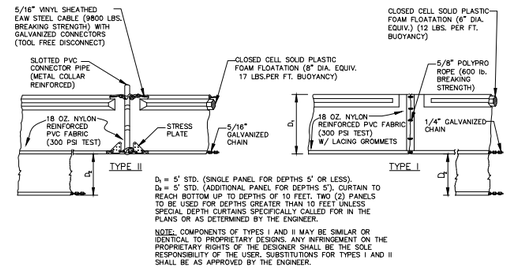

FLOATING TURBIDITY BARRIERS
N.T.S.

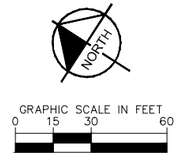

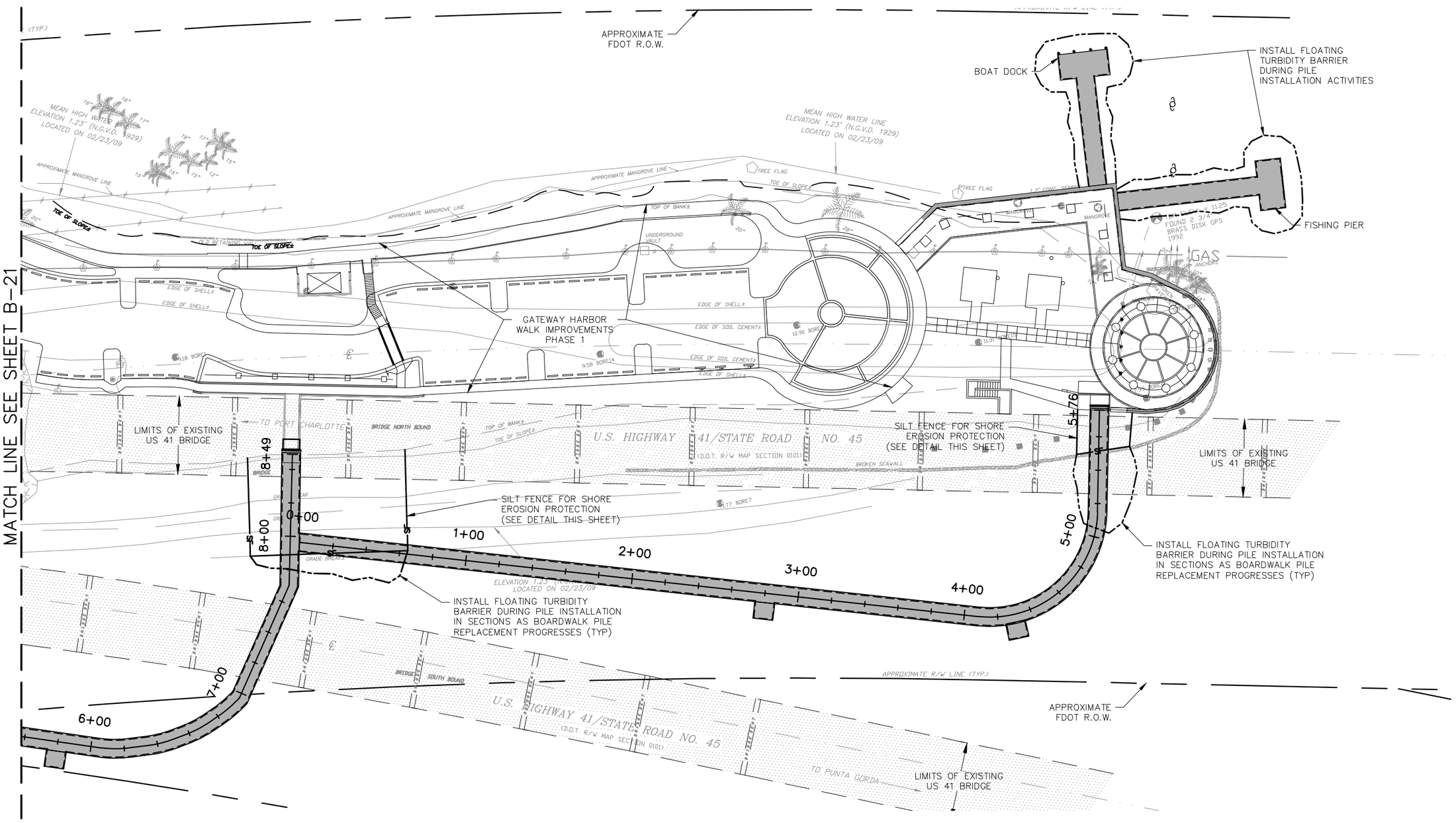

No.	REVISIONS	DATE	BY

Kimley»Horn
© 2014 KIMLEY-HORN AND ASSOCIATES, INC.
1777 MAIN STREET, SUITE 200, SARASOTA, FL 34236
PHONE: 941-379-7600
WWW.KIMLEY-HORN.COM CA 00000696

LICENSED PROFESSIONAL
PETER VAN BUSKIRK, P.E.
STATE OF FLORIDA
PROFESSIONAL ENGINEER
LICENSE NO. 38859

THIS ITEM HAS BEEN ELECTRONICALLY SIGNED AND SEALED BY PETER VAN BUSKIRK ON 11/11/2016 USING A SHA-1 AUTHENTICATION CODE.
PRINTED COPIES OF THIS DOCUMENT WERE NOT SEALED AND THE SHA-1 AUTHENTICATION CODE MUST BE VERIFIED ON ANY ELECTRONIC COPIES

KHA PROJECT	048392.009
DATE	OCT., 2014
SCALE	AS SHOWN
DESIGNED BY	KHA
DRAWN BY	KHA
CHECKED BY	KHA

BEST MANAGEMENT PRACTICES PLAN

HARBOR WALK PHASE 1B

PREPARED FOR
CHARLOTTE HARBOR COMMUNITY DEVELOPMENT AGENCY
CHARLOTTE COUNTY FLORIDA

SHEET NUMBER
B-22
100% PLANS

Plotted By:Harvey, Christian Sheet Set:HarborWalk-PH-1B Layout:B-22 BMP November 11, 2016 12:40:23pm K:\SAR_Civil\048392.009\CIVIL\CAD-Phase-1B\PlanSheets\B-22 BestManagementPractices.dwg
This document, together with the concepts and designs presented herein, as an instrument of service, is intended only for the specific purpose and client for which it was prepared. Reuse of and improper reliance on this document without written authorization and adaptation by Kimley-Horn and Associates, Inc. shall be without liability to Kimley-Horn and Associates, Inc.

TRAFFIC CONTROL GENERAL NOTES

1. THE CONTRACTOR SHALL ADHERE TO THE REQUIREMENTS SET FORTH IN THE LATEST VERSIONS OF THE MANUAL ON UNIFORM TRAFFIC CONTROL DEVICES AND SERIES 600 OF THE FDOT DESIGN STANDARDS AT ALL TIMES.
2. EXISTING POSTED SPEED OF 45 MPH ALONG U.S. HIGHWAY 41 (SR 45). SHALL REMAIN DURING CONSTRUCTION. TRAFFIC SHALL BE MAINTAINED ON PAVED SURFACES AT ALL TIMES. LAND CLOSURE, IF REQUIRED, IS RESTRICTED FROM 7 AM TO 7 PM DAILY.
3. ALL EXISTING SIGNS AND PAVEMENT MARKINGS WHICH CONFLICT WITH THE TRAFFIC CONTROL PLAN DURING A CONSTRUCTION PHASE, SHALL BE REMOVED OR TEMPORARILY OBSCURED AS NECESSARY PRIOR TO THE DIVERSION OF TRAFFIC AND THE COMMENCEMENT OF CONSTRUCTION.
4. INSTALL ADVANCE WARNING SIGNS IN ACCORDANCE WITH THE PLANS AND THE 600 SERIES OF THE STANDARD INDEX ALONG U.S. HIGHWAY 41 (SR 45).
5. PLACE WORK ZONE SIGNS AND BARRICADES IN ACCORDANCE WITH THE PLANS AND STANDARD INDEX 612.
6. CONTRACTOR SHALL MAINTAIN EXISTING LANE WIDTHS WHERE POSSIBLE, A MINIMUM OF 10' SHALL BE PROVIDED.
7. ACCESS TO ALL PROPERTIES SHALL BE MAINTAINED AT ALL TIMES DURING CONSTRUCTION.
8. CONSTRUCTION EQUIPMENT DRIVEN ON THE OPEN ROAD SHALL UTILIZE INDEX NO. 607.
9. EXISTING SIDEWALK WILL BE CLOSED AS NECESSARY TO ACCOMMODATE CONSTRUCTION. CONTRACTOR WILL PLACE NECESSARY SIDEWALK CLOSURE SIGNAGE IN ACCORDANCE WITH STANDARD INDEX 660.
10. CONTRACTOR TO ENSURE DROP-OFFS COMPLIANT WITH INDEX 600, NO UNSHIELDED DROP-OFF CONDITIONS SHALL REMAIN WHEN WORKERS ARE NOT PRESENT.

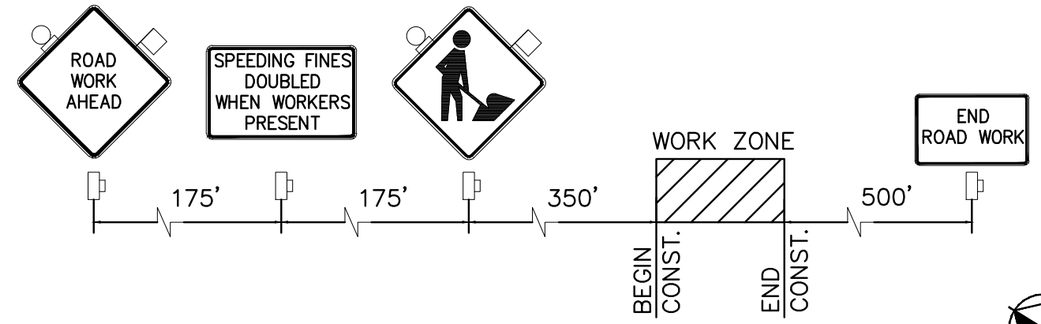

BEGIN/END CONST. SIGN DETAIL
N.T.S.

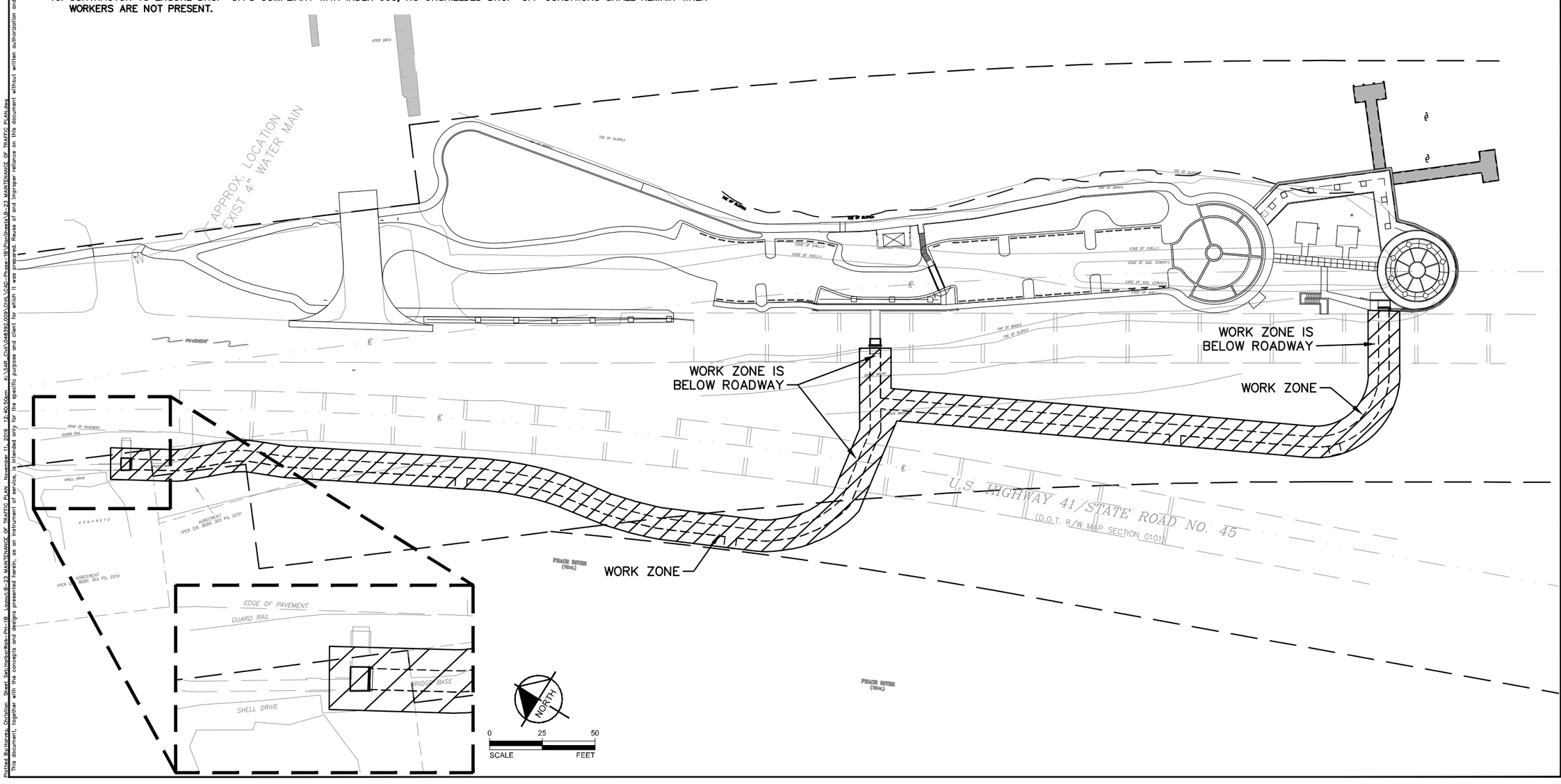

No.	REVISIONS	DATE	BY

Kimley»Horn

© 2014 KIMLEY-HORN AND ASSOCIATES, INC.
1777 MAIN STREET, SUITE 200, SARASOTA, FL 34236
PHONE: 941-379-7600
WWW.KIMLEY-HORN.COM CA 00000696

LICENSED PROFESSIONAL
PETER VAN BUSKIRK, P.E.
STATE OF FLORIDA
PROFESSIONAL ENGINEER
LICENSE NO. 38859

THIS ITEM WAS SEALED ELECTRONICALLY USING A SECURE SHA-1 DIGITAL SIGNATURE.
BY PETER VAN BUSKIRK
ON 11-11-2014 USING A VALID CERTIFICATION CODE.
PRINTED COPIES OF THIS DOCUMENT ARE NOT CONSIDERED SIGNED AND SEALED AND THE SHA-1 AUTHENTICATION CODE MUST BE VERIFIED ON ANY ELECTRONIC COPIES.

KHA PROJECT 048392.009
DATE OCT., 2014
SCALE AS SHOWN
DESIGNED BY KHA
DRAWN BY KHA
CHECKED BY KHA

MAINTENANCE OF TRAFFIC PLAN

HARBOR WALK PHASE 1B
PREPARED FOR
CHARLOTTE HARBOR COMMUNITY DEVELOPMENT AGENCY
CHARLOTTE COUNTY FLORIDA

SHEET NUMBER
B-23
100% PLANS

Plotted By:Horvath, Christian Sheet Set:Harbor Walk-PH-1B Layout:B-23 MAINTENANCE OF TRAFFIC PLAN November 11, 2014 12:45:50pm K:\SAR_Civil\048392.009\Civil\CAD-Phase-1B\PlanSheets\B-23 MAINTENANCE OF TRAFFIC PLAN.dwg
This document, together with the concepts and designs presented herein, as an instrument of service, is intended only for the specific purpose and client for which it was prepared. Reuse of and improper reliance on this document without written authorization and adaptation by Kimley-Horn and Associates, Inc. shall be without liability to Kimley-Horn and Associates, Inc.

NOTICE TO RECREATIONAL AND COMMERCIAL FISHERS

Sawfish are listed as endangered under the Endangered Species Act, which makes it illegal to harm, harass, or handle them in any way. It is illegal to hook or net one, except with a permit or in a permitted fishery. Accidental captures do occur while fishing for other species; if a sawfish is hooked or netted it should be released immediately. Remove as much fishing gear as safely as possible. DO NOT REMOVE THE SAW.

Sawfish Safe Release Guidelines

If hooked:

- Keep sawfish in the water at all times.
- If it can be done safely, untangle the line if it is wrapped around the saw and remove as much of the line as possible.
- Cut the line as close to the hook as possible.
- Do not handle the animal or attempt to remove any hooks on the saw unless you have a long-handled de-hooker.

If tangled in a net:

- Make every effort to free the animal from the net with minimal additional stress or injury.
- Keep sawfish, especially the gills, in the water as much as possible.
- Try to remove all the netting and release the animal quickly.
- DO NOT REMOVE THE SAW.

WARNING: Sawfish are large powerful animals that can cause serious injury. For your safety, and the safety of the sawfish, use caution if you do hook or net one of these animals.

Reporting a Sawfish Encounter

The Florida Museum of Natural History, Mote Marine Laboratory, and FWC have established a sawfish tracking database to assist in sawfish conservation efforts. If you do accidently encounter a sawfish, you can greatly help conservation efforts by providing the following information:

- Your name, phone number, and email address
- Date, time, and location of the encounter
- Number, size, and behavior of the sawfish during encounter
- Your activity at time of encounter
- Information on any tags, scars, or distinguishing marks

Please report this information to any of the below contacts:

George H. Burgess
Florida Museum of Natural History
Email: sawfish@flmnh.ufl.edu
Phone: (352) 392-2360

Colin Simpfendorfer
Mote Marine Laboratory
Email: sawfish@mote.org
Phone: (941) 388-4441

Gregg Poulakis
FL Fish and Wildlife Conservation Commission
Email: sawfish@myfwc.com
Phone: (941) 255-7403

Recycle your line or discard it in trash containers.

Reciclar sus líneas de pesca o desechar en los zafacones.

Help protect Florida's manatees.

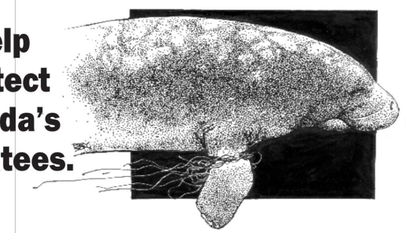

Ayude a proteger los manatíes de la Florida.

Manatees and other wildlife can easily become entangled in or ingest discarded monofilament fishing line and hooks, which can lead to serious injury or death.

Los manatíes y la otra vida silvestre se pueden enredar o ingerir líneas de pesca y anzuelos que pueden causar heridas graves o la muerte.

Wildlife Alert:

1-888-404-FWCC(3922)

cell *FWC or #FWC

Report collisions, sick, dead or injured manatees and any wildlife or boating law violations.

Informe sobre colisiones con los manatíes, manatíes heridos, enfermos o muertos u otras violaciones a leyes de embarcacioneso vida silvestre.

MANATEE AREA

Manatees can easily become entangled in or ingest discarded monofilament fishing line, which can lead to serious injury or even death. Additionally, anglers frequently hook manatees, which may make them leave this protected area. To help protect manatees and other wildlife, please recycle your fishing line instead of discarding used line in the water.

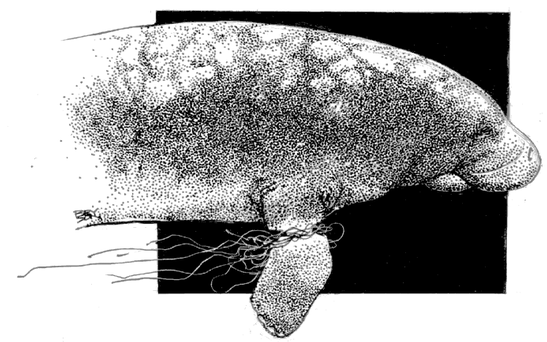

Act responsibly-Help protect Florida's manatees.

Florida Fish and Wildlife Conservation Commission
1(888) 404-FWCC

This information is made possible through the sale of the Save the Manatee license plate, which funds the manatee recovery program in Florida.

No.	REVISIONS	DATE	BY
1	ELEVATION REVISED	11/24/15	

Kimley»Horn

© 2014 KIMLEY-HORN AND ASSOCIATES, INC.
1777 MAIN STREET, SUITE 200, SARASOTA, FL 34236
PHONE: 941-379-7600
WWW.KIMLEY-HORN.COM CA 00000696

LICENSED PROFESSIONAL
PETER VAN BUSKIRK, P.E.
STATE OF FLORIDA
PROFESSIONAL ENGINEER
LICENSE NO. 38859

THIS ITEM HAS BEEN ELECTRONICALLY SIGNED AND SEALED BY PETER VAN BUSKIRK ON 11/17/2015 USING A SHA-1 AUTHENTICATION CODE.
PRINTED COPIES OF THIS DOCUMENT ARE NOT CONSIDERED SIGNED AND SEALED AND THE SHA-1 AUTHENTICATION CODE MUST BE VERIFIED ON ANY ELECTRONIC DOCUMENTS.

KHA PROJECT	048392.009
DATE	OCT., 2014
SCALE	AS SHOWN
DESIGNED BY	KHA
DRAWN BY	KHA
CHECKED BY	KHA

ENVIROMENTAL SIGNAGE PLAN

HARBOR WALK PHASE 1B
PREPARED FOR
CHARLOTTE HARBOR COMMUNITY DEVELOPMENT AGENCY
CHARLOTTE COUNTY FLORIDA

SHEET NUMBER
B-24
100% PLANS

Plotted By:Lopez, Christian Sheet: SatisfactoryWalk-Pbc-1B Layout:B-24 ENVIRONMENTAL SIGNAGE PLAN November 11, 2015 12:41:10pm K:\SAB_Out\048392.009\CIVIL\CAD\Phase-1B\PlanSheets\B-24 ENVIRONMENTAL SIGNAGE PLAN.dwg
This document, together with the concepts and designs presented herein, as an instrument of service, is intended only for the specific purpose and client for which it was prepared. Reuse of and improper reliance on this document without written authorization and adaptation by Kimley-Horn and Associates, Inc. shall be without liability to Kimley-Horn and Associates, Inc.

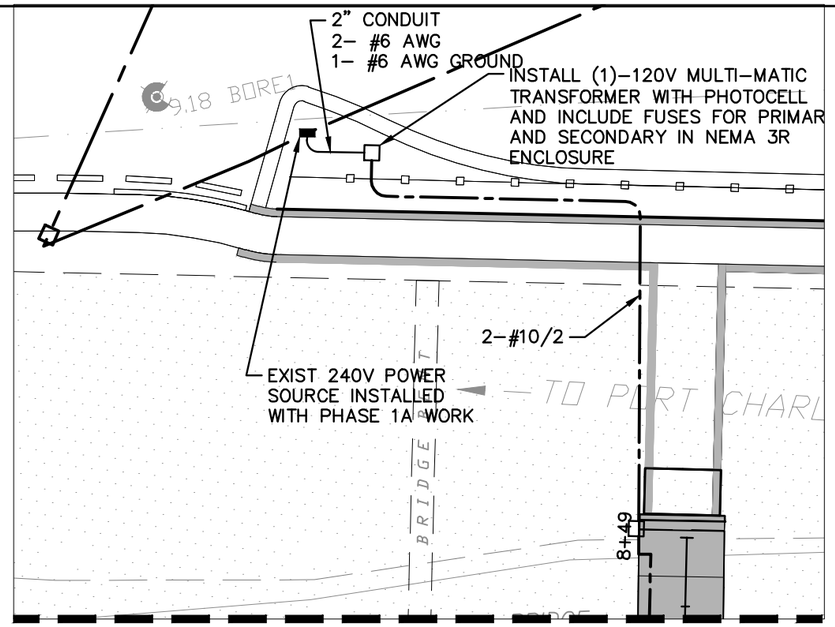

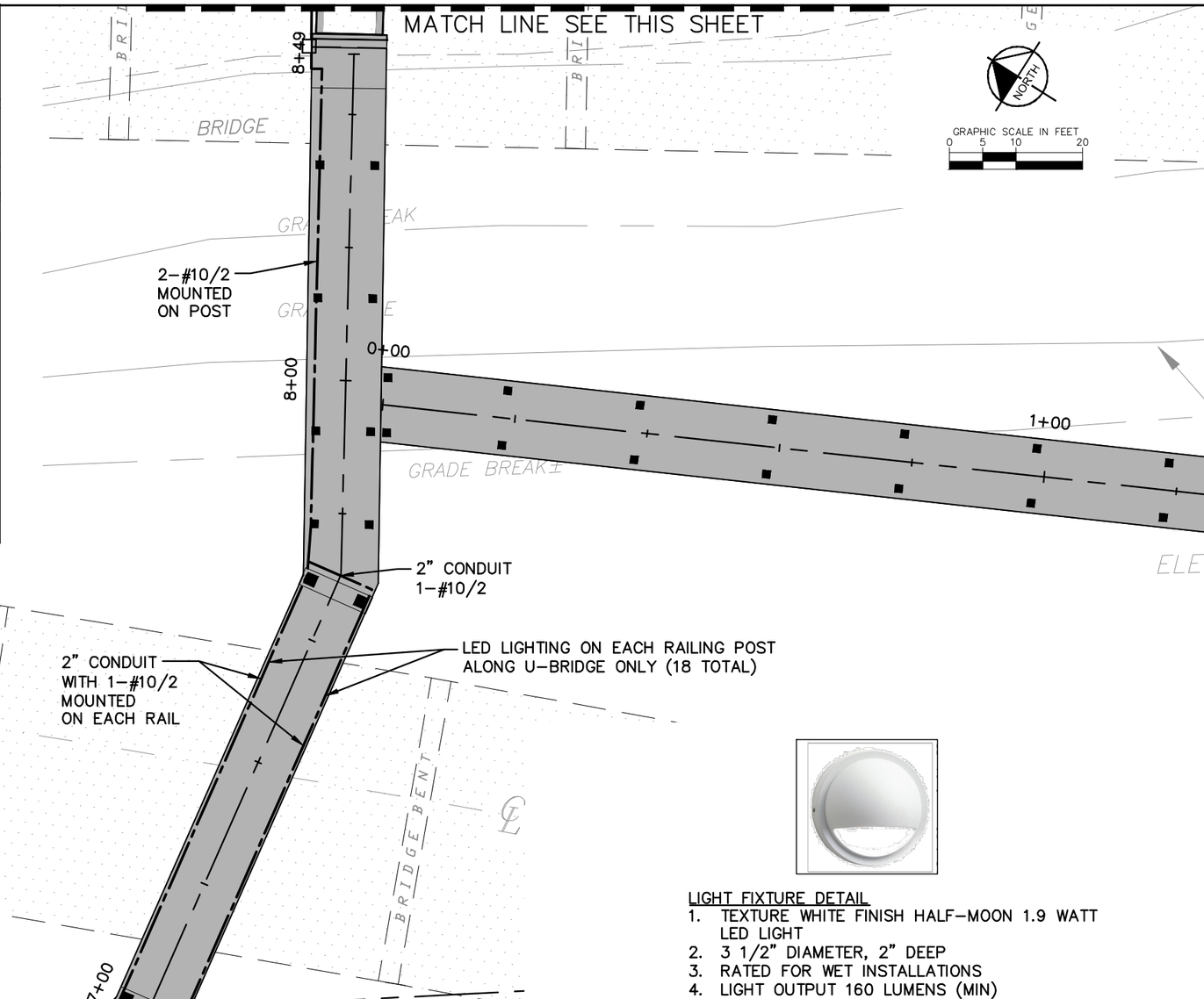

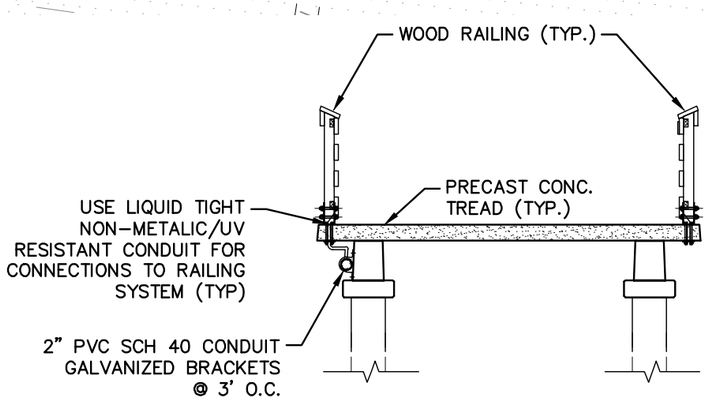

BOARWALK CONDUIT
PLACEMENT DETAIL
N.T.S.

LIGHT FIXTURE DETAIL
1. TEXTURE WHITE FINISH HALF-MOON 1.9 WATT LED LIGHT
2. 3 1/2" DIAMETER, 2" DEEP
3. RATED FOR WET INSTALLATIONS
4. LIGHT OUTPUT 160 LUMENS (MIN)

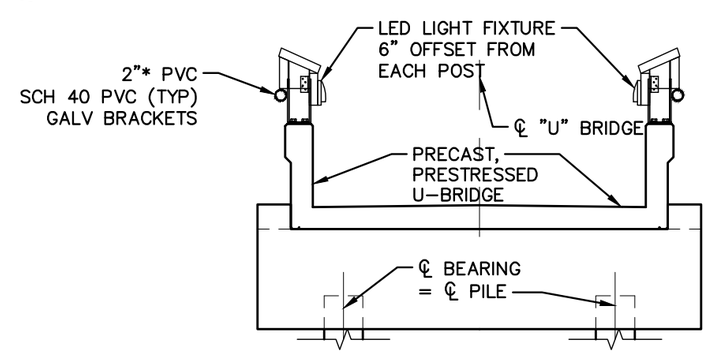

U-BRIDGE CONDUIT
PLACEMENT DETAIL
N.T.S.

LEGEND:
■ - PC/PS CONCRETE PILE (TYP.)

* ALL PVC CONDUIT SHALL BE FOR OUTDOOR USE AND HAVE EXTENDED UV PROTECTION

No.	REVISIONS	DATE	BY
1	NOTES REVISIONS	11/24/15	

Kimley»Horn
© 2014 KIMLEY-HORN AND ASSOCIATES, INC.
1777 MAIN STREET, SUITE 200, SARASOTA, FL 34236
PHONE: 941-379-7600
WWW.KIMLEY-HORN.COM CA 00000696

LICENSED PROFESSIONAL
PETER VAN BUSKIRK, P.E.
STATE OF FLORIDA
PROFESSIONAL ENGINEER
LICENSE NO. 38859
THIS ITEM WAS SIGNED ELECTRONICALLY SEALED AND DATED
BY PETER VAN BUSKIRK
ON 11/17/2015 USING A SHA-1 AUTHENTICATION CODE.
PRINTED COPIES OF THIS DOCUMENT ARE NOT CONSIDERED SIGNED AND SEALED AND THE SHA-1 AUTHENTICATION CODE MUST BE VERIFIED ON ANY ELECTRONIC DOCUMENTS

KHA PROJECT	048392.009
DATE	OCT., 2014
SCALE	AS SHOWN
DESIGNED BY	KHA
DRAWN BY	KHA
CHECKED BY	KHA

LIGHTING PLAN

HARBOR WALK PHASE 1B
PREPARED FOR
CHARLOTTE HARBOR
COMMUNITY
DEVELOPMENT AGENCY
CHARLOTTE COUNTY FLORIDA

SHEET NUMBER
L-1
100% PLANS

Plotted By:Harvey, Christian Sheet Set:HarborWalk-PH-1B Layout:L-1 LIGHTING PLAN November 11, 2016 12:41:57pm K:\SAR_CVL\048392.009\CIVIL\CAD-Phase-1B\PlanSheets\L-1 LIGHTING PLAN.dwg
This document, together with the concepts and designs presented herein, as an instrument of service, is intended only for the specific purpose and client for which it was prepared. Reuse of and improper reliance on this document without written authorization and adaptation by Kimley-Horn and Associates, Inc. shall be without liability to Kimley-Horn and Associates, Inc.

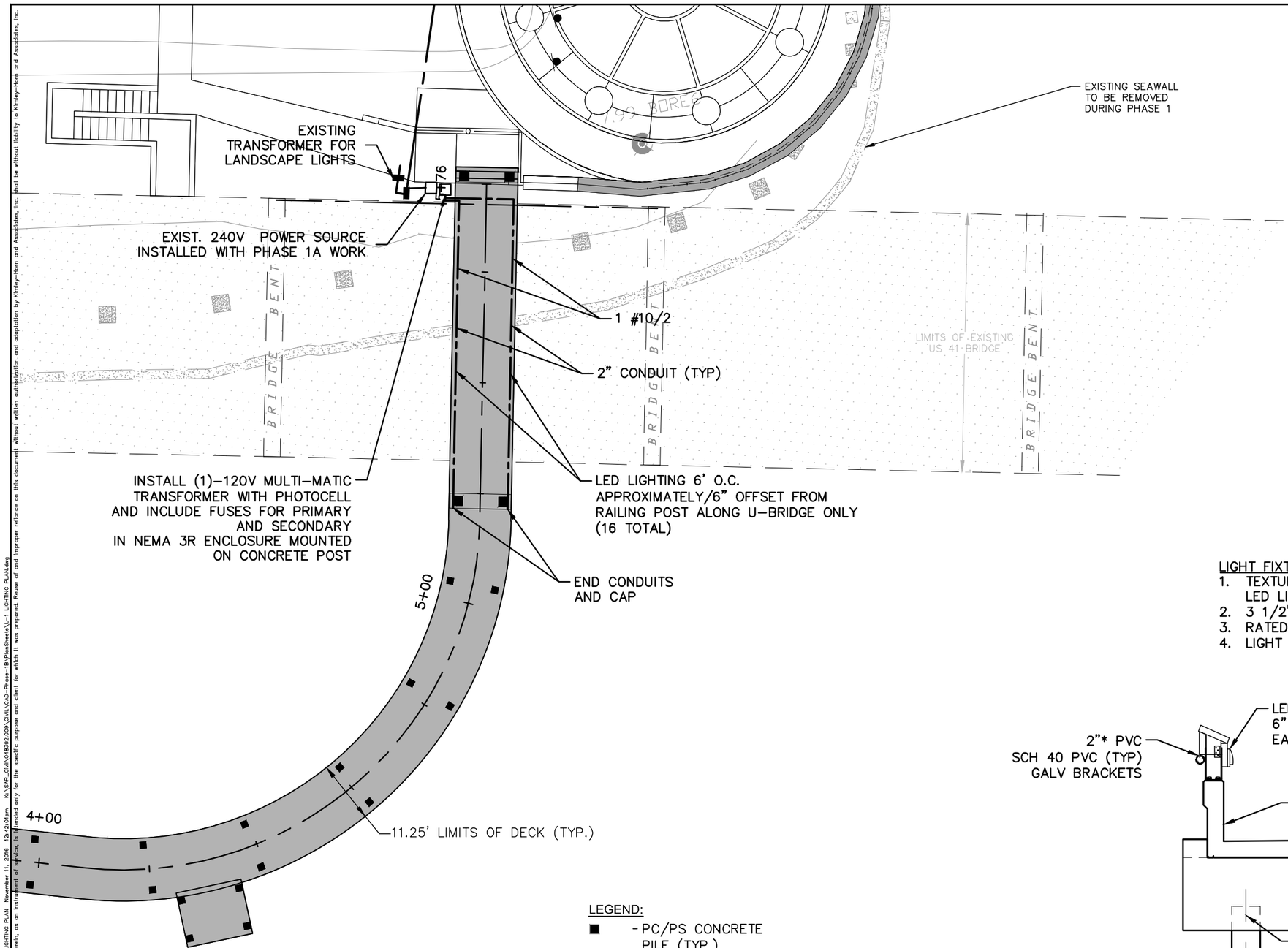

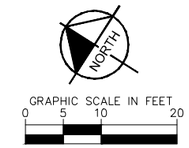

LIGHT FIXTURE DETAIL

1. TEXTURE WHITE FINISH HALF-MOON 1.9 WATT LED LIGHT
2. 3 1/2" DIAMETER, 2" DEEP
3. RATED FOR WET INSTALLATIONS
4. LIGHT OUTPUT 160 LUMENS (MIN)

LEGEND:

■ - PC/PS CONCRETE PILE (TYP.)

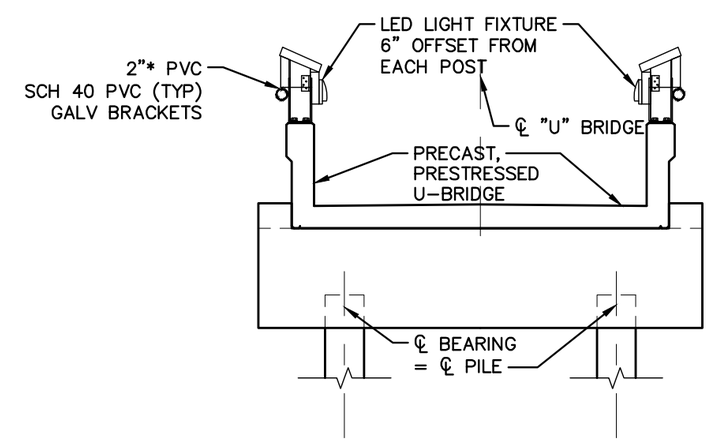

* ALL PVC CONDUIT SHALL BE FOR OUTDOOR USE AND HAVE EXTENDED UV PROTECTION

U-BRIDGE CONDUIT PLACEMENT DETAIL
N.T.S.

No.	REVISIONS	DATE	BY
1	NOTES REVISIONS	11/24/15	

Kimley»Horn

© 2014 KIMLEY-HORN AND ASSOCIATES, INC.
1777 MAIN STREET, SUITE 200, SARASOTA, FL 34236
PHONE: 941-379-7600
WWW.KIMLEY-HORN.COM CA 00000696

LICENSED PROFESSIONAL
PETER VAN BUSKIRK, P.E.
STATE OF FLORIDA
PROFESSIONAL ENGINEER
LICENSE NO. 38859
THIS ITEM HAS BEEN ELECTRONICALLY SIGNED AND SEALED BY PETER VAN BUSKIRK ON 11/17/2015 USING A SHA-1 AUTHENTICATION CODE. PRINTED COPIES OF THIS DOCUMENT ARE NOT CONSIDERED SIGNED AND SEALED AND THE SHA-1 AUTHENTICATION CODE MUST BE VERIFIED ON ANY ELECTRONIC COPIES

KHA PROJECT 048392.009	
DATE	OCT., 2014
SCALE	AS SHOWN
DESIGNED BY	KHA
DRAWN BY	KHA
CHECKED BY	KHA

LIGHTING PLAN

HARBOR WALK PHASE 1B
PREPARED FOR
CHARLOTTE HARBOR COMMUNITY DEVELOPMENT AGENCY
CHARLOTTE COUNTY FLORIDA

SHEET NUMBER
L-2
100% PLANS

Plotted By:Harvey, Christian Sheet Set:HarborWalk-PH-1B Layout:L-2 LIGHTING PLAN November 11, 2016 12:42:01pm K:\SAR_Civil\048392.009\CIVIL\CAD-Phase-1B\PlanSheets\L-1 LIGHTING PLAN.dwg
This document, together with the concepts and designs presented herein, as an instrument of service, is intended only for the specific purpose and client for which it was prepared. Reuse of and improper reliance on this document without written authorization and adaptation by Kimley-Horn and Associates, Inc. shall be without liability to Kimley-Horn and Associates, Inc.

PURCHASING DIVISION

Charlotte County Administration Center
18500 Murdock Circle, Suite 344
Port Charlotte, Florida 33948-1094

Phone 941.743.1378
Fax 941.743.1384

TO: PROSPECTIVE PROPOSERS

DATE: SEPTEMBER 29, 2025 PROPOSAL DUE DATE: 3:00 p.m. (EST), OCTOBER 15, 2025

RE: ADDENDUM #1, RFP NO. 20250718, DESIGN – LIVE OAK POINT PARK PHASE 2

Firms are hereby notified that this addendum shall be made a part of the above-named proposal and contract documents. The following are issued to revise/clarify the proposal and contract documents, and these items shall have the same force and effect as the original proposal and contract documents. Proposals to be submitted on the above-specified date at Purchasing shall conform to the revisions and clarifications as listed herein.

ITEM # 1 QUESTIONS/ANSWERS

Q1: Can you provide additional information and details on Phase 1 of this project?

A1: Phase 1 Shoreline Stabilization Project is designed to address erosion and improve the long-term stability of three key areas along the waterfront. The project includes the following improvements:

Area 1: Installation of approximately 294 linear feet of steel or vinyl toe wall inland of the mean high water line, helping to prevent erosion along the shoreline. In addition, about 88 square feet of riprap (rock) ditch lining will be placed in the upland area to enhance drainage and stability.

Area 2: A 145-foot-long steel sheet pile wall with a concrete cap will be installed along the sidewalk, set landward of the mean high water line, to stop further erosion. The project also includes selective trimming (391 square feet) of mangrove canopy and refurbishing approximately 247 square feet of riprap on the northwest side to support shoreline protection.

Area 3: A 75-foot-long steel sheet pile wall will be constructed just waterward of the existing deteriorating seawall to reinforce the shoreline. Additionally, around 150 tons of existing riprap in the uplands will be refurbished to restore its effectiveness in erosion control.

The Design Engineer for the Phase 1 portion is Weiler Engineering Corporation. Design and bid docs are complete and this work will be completed prior to Phase 2. The specific boundaries and limits of the project work areas for this phase will be finalized as part of the scope and fee negotiation process.

This addendum is binding and is to be considered as if contained within the original proposal documents of RFP No. 20250718. Firms are required to acknowledge receipt of this addendum on their proposal forms.

KA Corbett

Kimberly A. Corbett, C.P.M., CPPB
Senior Division Manager - Purchasing

KAC/rm
cc: Professional Services Committee
Clerk
File

Charlotte County Purchasing Division
18500 Murdock Circle, Suite 344
Port Charlotte, Florida 33948-1094

Phone 941.743.1378

NOTICE OF AVAILABILITY

REQUEST FOR PROPOSALS
CHARLOTTE COUNTY, FLORIDA

The County of Charlotte will be receiving sealed proposals at the Purchasing Division, Suite 344, Charlotte County Administration Center, 18500 Murdock Circle, Port Charlotte, FL 33948-1094, for:

RFP NO. 20250718
DESIGN –LIVE OAK POINT PARK PHASE 2

It is the intent of Charlotte County to obtain professional design services for a firm to perform design of construction ready plans to be incorporated into the County's bid documents and all applicable Federal, State and Local permitting and construction oversight services for the partial demolition and complete replacement/repair of the boardwalk, T-dock fishing pier, water taxi pier and upland walkways including ramps and railings (concrete and paver). Estimated Budget: $350,000

There will not be a Pre-Submittal Conference for this project. Please send all questions to the email address below.

PROPOSAL DUE DATE: 3:00 p.m. (EST), OCTOBER 15, 2025

Proposal Documents may be obtained by accessing the Charlotte County Purchasing Division's website at https://purchasingbids.charlottecountyfl.gov under "Purchasing Bids Online", document number 257182. Any questions can be answered by contacting Rhiannon Mills, Senior Contract Specialist at 941.743.1374, or email: Rhiannon.Mills@CharlotteCountyFL.gov

ELECTRONIC BID SUBMISSIONS: All submittals for this project shall be submitted electronically. Please visit http://bit.ly/3TYAyKa and follow given instructions.

Notice of Availability
Posted: September 24, 2025

Charlotte County Purchasing Division
18500 Murdock Circle, Suite 344
Port Charlotte, Florida 33948-1094

Phone 941.743.1378
Fax 941.743.1384

STATEMENT OF NO SUBMITTAL

If you **do not** intend to submit on this commodity/service, please return this form to the above address immediately. If this statement is not completed and returned, your company may be deleted from the Charlotte County Vendors' list for this commodity/service.

We, the undersigned, have declined to submit on requested commodity/service **RFP #20250718, DESIGN – LIVE OAK POINT PARK PHASE 2 ,** for the following reason(s):

_____ Specifications too "tight", i.e. geared toward one brand or manufacturer only (explain below).

_____ Insufficient time to respond to the Request for Proposal.

_____ We do not offer this product or service.

_____ Our schedule would not permit us to perform.

_____ Unable to meet bond/insurance requirements.

_____ Unable to meet specifications.

_____ Specifications are unclear (explain below).

_____ Remove us from your vendors' list for this commodity/service.

_____ Other (specify below).

Remarks:_____
_____
_____
_____
_____

Company Name: _____

Contact Person (typed or printed): _____

Contact Person Signature: _____

Phone: _____ Fax: _____

E-Mail Address: _____

Note: Statement of No Submittal may be emailed to Rhiannon.Mills@CharlotteCountyFL.gov
.

TABLE OF CONTENTS
DESIGN –LIVE OAK POINT PARK PHASE 2
RFP NO. 20250718

Notice of Availability	**1**
"No Submittal" Response Page	**2**
Table of Contents	**3**
PART I - GENERAL INSTRUCTIONS	**4 - 8**
PART II - SCOPE OF SERVICES	**9-10**
PART III – FEDERAL REQUIREMENTS	**11-16**
PART IV - PROPOSAL FORMAT & CRITERIA FOR AWARD	**17-20**
PART V - SUBMITTAL FORMS	**21-25**

REQUEST FOR PROPOSAL
DESIGN – BAYSHORE LIVE OAK SHORELINE
RFP 20250710

PART I - INSTRUCTIONS

RP-01 INTENT:
A. It is the intent of the County to select a firm who clearly demonstrates the highest level of ability and proven reliability to perform the professional services specified in the Scope of Services. Brief summaries applicable to the required work should be included with the proposal.

B. **Time and Date Due -** Charlotte County will accept proposals from individuals, corporations, partnerships, and other legal entities authorized to conduct business in the State of Florida until **3:00 p.m., OCTOBER 15, 2025.**

RP-02 CONTRACT AWARDS: The County anticipates entering into a contract with one (1) firm who submit the proposal judged to be most advantageous to the County. The selected firm shall be required to sign a formal agreement in the standard form currently used by Charlotte County for professional services.

The proposer understands that this RFP does not constitute an agreement or a contract with the proposer. A proposal is not binding until proposals are reviewed and accepted by the Board of County Commissioners and a contract is executed by both parties.

RP-03 DEVELOPMENT COSTS: The County shall not be liable for any expense incurred in connection with preparation of a response to this Request for Proposal (RFP). Proposers should prepare a straightforward and concise description of the proposers' ability to meet the requirements of the RFP.

RP-04 INQUIRIES: The County will not respond to oral inquiries. Proposers may submit written or emailed inquiries regarding this RFP to Purchasing, 18500 Murdock Circle, Suite 344, Port Charlotte, Florida 33948 or Rhiannon.Mills@charlottecountyfl.gov. The County will respond to written or emailed inquiries received at least five (5) calendar days prior to the RFP due date.

The County will record its responses to inquiries and any supplemental instructions in the form of written addenda. It shall be the responsibility of the proposer, prior to submitting their proposals, to view the website https://purchasingbids.charlottecountyfl.gov to determine if addenda were issued, acknowledging and incorporating them into their proposal.

RP-05 PROPOSAL SUBMISSION AND WITHDRAWAL: The County will receive proposals electronically. Please visit http://bit.ly/3TYAyKa and follow given instructions.

Proposals received after the established deadline will not be opened. Proposers may withdraw their proposal by notifying the County in writing at any time prior to the due date. Proposals not so withdrawn shall, upon opening, constitute an irrevocable offer for a period of 120 days to provide Charlotte County the services set forth in these specifications until one of the proposals has been accepted by the Board of County Commissioners. Upon opening, proposals become "public records" and shall be subject to public disclosure in accordance with Chapter 119, Florida Statutes.

RP-06 PROPOSAL RESTRICTIONS: In accordance with Ordinance #96-002, the manufacture, use, display or other employment of any facsimile or reproduction of the Charlotte County Seal, without the express, prior, written approval of the Board of County Commissioners of Charlotte County, Florida, is hereby declared to be unlawful and punishable as a Second-Degree Misdemeanor as provided in Section 165.043, Florida Statutes.

RP-07 DRUG FREE WORKPLACE: Charlotte County is a Drug Free Workplace**.** It is strongly suggested that the attached Drug Free Workplace Form be signed and returned to this office with the proposal.

RP-08 PUBLIC ENTITY CRIMES STATEMENT: In accordance with Florida Statutes Sec. 287.133(2)(a), "A person or affiliate who has been placed on the convicted vendor list following a conviction for a public entity crime may not submit a bid on a contract to provide any goods/services to a public entity, may not submit a bid on a contract with a public entity for construction or repair of a public building or public work, may not submit bids on leases of real property to a public entity, may not be awarded or perform work as a Contractor, supplier, subcontractor, or consultant under a contract with any public entity, and may not transact business with any public entity in excess of the threshold amount provided in Section 287.017, for Category

Two, for a period of 36 months from the date of being placed on the convicted vendor list".

RP-09 CANCELLATION/TERMINATION: The County shall have the right to unilaterally cancel, terminate or suspend this Contract, in whole or in part, by providing the successful proposer thirty (30) days written notice by certified mail.

It is expressly understood by the County and the Contractor that funding for any successive fiscal years is contingent upon appropriation of monies by the Board of County Commissioners. In the event funds are not available or not appropriated, the County reserves the right to terminate the Contract and/or individual leases. The County will be responsible for any outstanding invoices prior to the termination.

RP-10 RESERVED RIGHTS: The County reserves the right to accept or reject any and/or all proposals, to waive irregularities and technicalities, and to request resubmission. Any sole response received the first submission date may or may not be rejected by the County, depending on available competition and timely needs of the County. The County shall be the sole judge of the proposal and the resulting agreement that is in its best interest, and its decision shall be final.

The County reserves the right to accept or reject any or any part of the submissions, if it is deemed in the best interest of the County. The County, in its sole discretion, may expand the scope of work to include additional requirements. The County reserves the right to investigate as it deems necessary to determine the ability of any firm to perform the work or services requested. The firms, upon request shall provide information the County deems necessary in order to make a determination.

RP-11 EQUAL EMPLOYMENT OPPORTUNITY CLAUSE: Charlotte County, Florida, in accordance with the provisions of Title VII of The Civil Rights Act of 1964 (78 Stat. 252) and the Regulations of the Department of Commerce (15 CFR, Part 8) issued pursuant to such Act, hereby notifies all firms it will affirmatively ensure in any contract entered into pursuant to this advertisement, women-owned and minority business enterprises (collectively MBEs) will be afforded full opportunity to submit proposals in response to this advertisement and will not be discriminated against on the grounds of gender, race, color or national origin in consideration for an award. The County will consider the firm's status as an MBE or a certified MBE, and also the status of any sub-contractors or sub-consultants proposed to be utilized by the firm, within the evaluation process. Interested MBEs and certified MBEs are encouraged to respond.

All firms are hereby notified that the successful firms must and shall comply with the Civil Rights Act of 1964, the Age Discrimination in Employment Act, the Rehabilitation Act of 1973, the Americans with Disabilities Act and the Florida Civil Rights Act, all as amended. Specifically, firms agree that:

No person shall, on the grounds of race, color, sex, religion, age, disability, national origin or marital status, be excluded from participation in, be denied the benefits of, or be otherwise subjected to discrimination under any program, activity or service funded through this Contract.

- Contractor will not discriminate against any employee or applicant for employment because of race, color, religion, sex, age, disability, national origin or marital status. Contractor agrees to post in a conspicuous place, available to employees and applicants for employment, notices setting forth the provisions of this non-discrimination clause.
- Contractor will, in all solicitations or advertisements regarding program activities, services provided or applications for employment, state that all qualified applicants will receive consideration for services or employment without regard to race, color, religion, sex, age, disability, national origin or marital status.
- County may require Contractor to submit reports as may be necessary to indicate non-discrimination. County officials will be permitted access to Contractor's books, records, accounts and other sources of information and its facilities as may be pertinent to ascertain compliance with non-discrimination laws.

It is expressly understood that County shall have the right to terminate this Contract upon receipt of evidence of discrimination.

RP-12 PAYMENT: Request for payment must be submitted to Charlotte County Purchasing on a form approved by the County in accordance with contract documents. Price shall be net and all invoices payable according to the Local Government Prompt Payment Act (F.S.218.74).

RP-13 PERFORMANCE EVALUATION: At the end of the Contract, the receiving department will evaluate the successful proposers' performance. This evaluation will become public record.

RP-14 INSURANCE REQUIREMENTS: Contractor and subcontractors shall procure and maintain until all of their obligations have been discharged, including any warranty periods under this Contract are satisfied, insurance against claims for injury to persons or damage to property which may arise from or in connection with the performance of the work hereunder by the

Contractor, his agents, representatives, employees or subcontractors.

The insurance requirements herein are minimum requirements for this Contract and in no way limit the indemnity covenants contained in this Contract. The County in no way warrants that the minimum limits contained herein are sufficient to protect the Contractor from liabilities that might arise out of the performance of the work under this Contract by the Contractor, his agents, representatives, employees, or subcontractors. Contractor is free to purchase such additional insurance as may be determined necessary.

A. **MINIMUM SCOPE AND LIMITS OF INSURANCE -** Contractor shall provide coverage with limits of liability not less than those stated below. An excess liability policy or umbrella liability policy may be used to meet the minimum liability requirements provided that the coverage is written on a "following form" basis.

1. **Commercial General Liability – Occurrence Form (CG 00 01)**
   Policy shall include bodily injury, property damage, broad form contractual liability and Explosion, Collapse and Underground (XCU) coverage.

   - General Aggregate $2,000,000
   - Each Occurrence $1,000,000

   a. The policy shall be endorsed to include the following additional insured language: "Charlotte County a political subdivision of the state of Florida and it officers, employees, agents and volunteers" shall be named as an additional insured with respect to liability arising out of the activities performed by, or on behalf of the Contractor.
   b. Contractor's subcontractors shall be subject to the same minimum requirements identified above.
   c. Policy shall be endorsed for a waiver of subrogation against the Charlotte County.

2. **Automobile Liability**
   Bodily injury and property damage for any owned, hired, and non-owned vehicles used in the performance of this Contract. Automobile liability must be written on a standard ISO form (CA 00 01) covering any auto (Code 1), or if Contractor has no owned autos, hired (Code 8) and non-owned (Code 9) autos.

   Combined Single Limit (CSL) $1,000,000

   a. The policy shall be endorsed to include the following additional insured language: "Charlotte County a political subdivision of the state of Florida and it officers, employees, agents and volunteers" shall be named as an additional insured with respect to liability arising out of the activities performed by, or on behalf of the Contractor, including automobiles owned, leased, hired or borrowed by the Contractor"**.**
   b. Contractor's sub-contractors shall be subject to the same minimum requirements identified in this section.
   c. Policy shall contain a waiver of subrogation against the Charlotte County.

3. **Worker's Compensation and Employers' Liability**

Workers' Compensation	Statutory
Employers' Liability	
Each Accident, bodily injury or disease	$1,000,000

   a. Policy shall contain a waiver of subrogation against the Charlotte County.
   b. Contractor's sub-contractors shall be subject to the same minimum requirements identified in this section.
   c. If the contractor has no employees the contractor must submit to the County the Workers Compensation Exemption from the State of Florida.

4. **Professional Liability (Errors and Omissions Liability) for Prime Contractors**
   a. Estimated Projection Construction Cost up to **$9,999,999**

Each Claim	$1,000,000
Annual Aggregate	$2,000,000

   b. Estimated Projection Construction Cost from **$10,000,000 to $19,999,999**

Each Claim	$2,000,000
Annual Aggregate	$2,000,000

   c. Estimated Projection Construction Cost from **$20,000,000 to $40,000,000**

Each Claim	$3,000,000
Annual Aggregate	$3,000,000

d. In the event that any professional liability insurance required by this Contract is written on a claims-made basis, Contractor warrants that any retroactive date under the policy shall precede the effective date of this Contract; and that either continuous coverage will be maintained or an extended discovery period will be exercised for a period of five (5) years beginning at the time work under this Contract is completed.

e. Policy shall contain a waiver of subrogation against Charlotte County.

5. **Professional Liability (Errors and Omissions Liability) for Subcontractors**

In addition to the insurance requirements for the Contractor, the contractor's registered sub-contractors (including structural, civil, mechanical, plumbing, electrical engineering, landscape architecture, survey, geotechnical and materials testing) are required to carry Professional Liability insurance at the same levels and conditions as the Contractor.

Additional Insured – All policies, ***except*** for the Workers Compensation and Professional Liability shall contain endorsements naming the County its officers, employees, agents and volunteers as additional insured with respect to liabilities arising out of the performance of services contained herein. The additional insured endorsements shall not limit the scope of coverage for the County to vicarious liability but shall allow coverage for the County to full extent provided by the policy, even if those limits exceed those required by this contract. Such additional insured coverage shall be at least as broad as Additional Insured (Form B) endorsement form ISO, CG 20 10 11 85 or both CG 20 10 and CG 20 37 if later revisions used.

Waiver of Subrogation Rights – The Contractor shall require the carriers of required coverages to waive all rights of subrogation against the County, its officers, employees, agents and volunteers. Contractor agrees to obtain any endorsement that may be necessary to affect this waiver of subrogation. All general or auto liability insurance coverage provided shall not prohibit the Contractor and Contractor's employees or agents from waiving the right of subrogation prior to a loss or claim. The Contractor hereby waives all rights of subrogation against the County.

Policies Primary and Non-Contributory – For any claims related to this contract, the Contractor's insurance coverage shall be primary insurance as respects the County, its officers, employees, agents and volunteers. Any insurance or self-insurance maintained by the County, its officers, employees, agents or volunteers shall be excess of the Contractor's insurance and shall not contribute with it.

Severability of Interests – The Contractor agrees to ensure that coverage provided to meet these requirements is applicable separately to each insured and there will be no cross liability exclusions that preclude coverage for suits between the Contractor and the County or between the County and any other insured or additional insured under the policy.

Proof of Coverage - Prior to the commencement of performance of services the Contractor shall furnish to the County Purchasing Division Certificates of Insurance and amendatory endorsements or copies of the applicable policy language effecting coverage required. These certificates shall provide that such insurance shall not be terminated or expire without notice thereof in accordance with the policy provisions and Contractor shall maintain such insurance from the time the Contractor commences performance of services until completion of such services. Within seven (7) calendar days of notice of award, the Contractor shall furnish a copy of the Declaration page and required endorsements for all applicable policies and will provide complete certified copies of the policies and endorsements immediately upon request.

Acceptability of insurance carrier – Unless otherwise approved by Risk Management, Insurance shall be written by insurers authorized to do business in the State of Florida and with a minimum Best Insurance Guide rating of "A:VII".

Deductibles and Self-Insured Retention – Any and all deductibles or self-insured retentions in excess of $10,000 shall be declared to and approved by Risk Management. The County may require the Contractor to purchase coverage with a lower deductible or retention or provide proof of ability to pay losses and related investigations, claim administration and defense expenses within the deductible or retention.

Failure to Procure Coverage – In the event that any policy of insurance required under this contract does not comply with the requirements, is not procured or is cancelled and not replaced, the County has the right but not the obligation or duty to terminate the contract or obtain insurance if it deems necessary and any premiums paid by the County will be promptly reimbursed by the Contractor or County payments to the Contractor will be reduced to pay for County purchased insurance.

Insurance Review – Insurance requirements are subject to periodic review by the County. The Risk Manager or designee is authorized, but not required, to reduce, waive, or suspend any insurance requirements whenever Risk Management determines that any of the required insurance is not available, is unreasonably priced or is not needed to protect the interests of the County.

In addition, if Risk Management determines that heretofore, unreasonably or unavailable types of insurance coverage or coverage limits become reasonably priced or available, the Risk Manager or designee is authorized, but not required, to change the above insurance requirements to require additional types of insurance coverage or higher coverage limits, provided that any such change is reasonable in light of past claims against the County, inflation, or any other item reasonably related to the County's risk. Any change requiring additional types of insurance coverage or higher coverage limits must be made by amendment to this contract. Contractor agrees to execute any such amendment within thirty (30) days of receipt.

Any failure, actual, or alleged, on part of the County to monitor or enforce compliance with any of the insurance and indemnification requirements will not be deemed as a waiver of any rights on the par to the County.

RP-15 UNAUTHORIZED ALIEN WORKERS: Charlotte County will not intentionally award publicly-funded contracts to any contractor who knowingly employs unauthorized alien workers, constituting a violation of the employment provisions contains in 8 U.S.C. Section 1324a [Section 274A of the Immigration and Nationality Act ("INA")]. The County shall consider employment by any Contractor of unauthorized aliens a violation of Section 274A of the INA. Such violation by the Contractor of the employment provisions contained in Section 274A of the INA shall be grounds for termination of this Agreement by the County. In addition, pursuant to Section 448.095 of the Florida Statutes, all persons or firms entering into contracts with Charlotte County are required to register with, and use, the E-Verify system of the U.S. Department of Homeland Security to electronically verify the employment eligibility of all newly hired employees. The County may terminate this Agreement for failure on the part of the Contractor to use E-Verify. Contract termination for failure to use E-Verify is not considered a breach of contract pursuant to s. 448.095(2)(c)3, *Fla. Stat.*

RP-16 EMPLOYEE BACKGROUND CHECK: If an owner, except a stockholder in a publicly traded corporation, or an employee of the Contractor has been convicted of any offenses requiring registration as a sexual offender or sexual predator, regardless of the location of conviction, the Contractor shall ensure that the offender's or predator's work on the project is consistent with the terms of his probation and registry requirements.

RP-17 PUBLIC RECORDS CLAUSE TO CONTRACTORS "ACTING ON BEHALF OF THE COUNTY": Pursuant to Section 119.0701 of the Florida Statutes, Contractors acting on behalf of the County must comply with the public records laws, specifically: a) keep and maintain public records required by the County to perform the contracted services; b) upon request from the County's custodian of public records, provide the County with a copy of the requested records or allow the records to be inspected or copied within a reasonable time at a cost that does not exceed the cost provided in Chapter 119 of the Florida Statutes or as otherwise provided by law; c) ensure that public records that are exempt or confidential from public records disclosure requirements are not disclosed except as authorized by law for the duration of the contract term and following completion of the contract; and d) upon completion of the contract, keep and maintain all public records required by the County to perform the service, and meet all applicable requirements for retaining public records.

IF THE CONTRACTOR HAS QUESTIONS REGARDING THE APPLICATION OF CHAPTER 119, FLORIDA STATUTES, TO THE CONTRACTOR'S DUTY TO RETAIN AND PROVIDE PUBLIC RECORDS RELATING TO THIS CONTRACT, CONTACT THE COUNTY'S CUSTODIAN OF PUBLIC RECORDS AT (941) 743-1441, E-MAIL TO RECORDS@CHARLOTTECOUNTYFL.GOV, 18500 MURDOCK CIRCLE, BLDG. B, Suite 109, PORT CHARLOTTE, FLORIDA 33948.

RP-18 SOCIAL, POLITICAL, OR IDEOLOGICAL INTERESTS: Charlotte County will not request documentation of, or consider a vendor's social, political, or ideological interests when determining if the vendor is a responsible vendor. Charlotte County does not give preference to vendors based on social, political, or ideological interests.

END OF PART I

PART II
SCOPE OF SERVICES

RP-19 PROJECT DESCRIPTION: Charlotte County is requesting proposals from qualified firms to provide professional design services for a firm to perform design of construction ready plans to be incorporated into the County's bid documents and all applicable Federal, State and Local permitting and construction oversight services for the partial demolition and complete replacement/repair of the boardwalk, T-dock fishing pier, water taxi pier and upland walkways including ramps and railings (concrete and paver). It consists of approximately 17,500 square foot overwater boardwalk with cast concrete decking and wooden safety rail system, approximately 1,110 square foot T-dock fishing pier with cast concrete decking and wooden safety rail system, approximately 1,020 square foot water taxi pier with cast concrete decking and wooden safety rail system, stormwater outfalls, approximately 800 lineal feet upland walkways comprised of sidewalks and ramps with safety railing located at Live Oak Point Park 5100 Tamiami Trail, Charlotte Harbor, FL 33980. This is a Disaster Recovery Project. ****Project scope does not include Phase 1 stabilization scope including seawall repair, revetment, shoreline stabilization and upland paver walkways. Project boundaries will be verified****

Elements include, but are not limited to, the following:

1. **Design and Permitting Services** - project initiation, data collection, preliminary design and permitting.
2. **Construction Services** – value engineering, costing, construction plans and specifications and bid process requirements.
3. **Construction Management** – pre-construction meeting, scheduling, observation, review permits, submittals, pay applications

RP-20 SCOPE OF SERVICES: The scope of services shall include, but not be limited to the following:

A. Design and Permitting Services:

1. Site Analysis/Permitting - Collecting site data, providing site studies, surveys, preparation of site plans, meetings with public utility agencies, all necessary permitting agency applications and approvals, coordination meetings and presentations to local officials and County representatives.
    a. All necessary permitting agencies could include County DRC, SWFWMD, FDEP, USFWS, NMFS and USACE where necessary for the project's completion in compliance with applicable regulations. Ensure that project will fully comply with all relevant environmental and historic preservation (EHP) requirements, in accordance with FEMA regulations and applicable federal, state, and local laws. These include but are not limited to adherence to protocols within the allowances of Nationwide Permit 03 (Maintenance) pertaining to Section 404 of the Clean Water Act and/or Section 10 of the Rivers and Harbors Act if applicable.
2. The Schematic Design Phase - Conferences and consultations with staff and the respective advisory personnel/committees resulting in preliminary studies and sketches of the project to arrive at an acceptable solution of the design problem.
3. The Design Development Phase - Refinement of schematic design with staff and the respective advisory personnel resulting in selection of materials and construction systems. Provide progress set of plans including cost estimate and review with the County's Community Services Department.
4. Develop and/or incorporate Hazard Mitigation elements (HMP) for storm resiliency in line with potential for FEMA funding.

B. Construction Services:

1. The Construction Document Phase - Preparation of final working drawings, large scale details and specifications meeting standard codes for obtaining bids, building permits and getting a contract for construction including cost estimate. Provide an Opinion of Probable Cost (OPC) for full completion of the project.
    a. All documents shall be thorough and absent of ambiguities and totally coordinated between the various engineering disciplines and reviewed with the County's Community Services Department. In addition to paper construction documents, provide electronic format (AutoCAD) set of plans to Community Services.

C. Construction Management:

1. The Construction Observation Phase - Review the construction and determine that the project is constructed in accordance with the approved plans and specifications. The construction observation services shall include, but not be limited to the following:
    a. Project coordination meetings.
    b. Observations when work is being performed, and circumstances may be required to determine the progress and quality of the construction project.
    c. Review and process shop drawings and submittals.
    d. Final observation and certification to the County that the project has been completed in accordance with the plans and specifications.
    e. Provide final inspection and punch list before and after substantial completion of the project.
    f. Coordinate as-built documentation.

.

END OF PART II

The projects, programs, and activities to be completed under this Agreement are fully or partially funded by Federal funding, grants and/or disaster assistance from various federal and state agencies including, but not limited to, the Florida Division of Emergency Management (FDEM) and the Federal Emergency Management Agency (FEMA). Therefore, consultants, contractors and their subcontractors (hereinafter referred to as "Contractor") will be required to comply with the applicable provisions of 2 C.F.R. Part 200, Appendix II and with the following provisions, **as applicable.** The Contractor shall require compliance with all applicable federal requirements as may be required by 2 C.F.R. Part 200, Appendix II, and as are listed below, of all subcontractors performing work the value of which is in excess of $10,000, by including these federal requirements in all contracts with subcontractors.

Title VI List of Pertinent Nondiscrimination Acts and Authorities.
During the performance of this Agreement, the Contractor, for itself, its assignees, and successors in interest agrees to comply with the following non-discrimination statutes and authorities, as applicable, including but not limited to:

- Title VI of the Civil Rights Act of 1964 (42 USC § 2000d et seq., 78 stat. 252) (prohibits discrimination on the basis of race, color, national origin);
- 49 CFR part 21 (Non-discrimination in Federally-assisted programs of the Department of Transportation—Effectuation of Title VI of the Civil Rights Act of 1964);
- The Uniform Relocation Assistance and Real Property Acquisition Policies Act of 1970, (42 USC § 4601) (prohibits unfair treatment of persons displaced or whose property has been acquired because of Federal or Federal-aid programs and projects);
- Section 504 of the Rehabilitation Act of 1973 (29 USC § 794 et seq.), as amended (prohibits discrimination on the basis of disability); and 49 CFR part 27;
- The Age Discrimination Act of 1975, as amended (42 USC § 6101 et seq.) (prohibits discrimination on the basis of age);
- Airport and Airway Improvement Act of 1982 (49 USC § 471, Section 47123), as amended (prohibits discrimination based on race, creed, color, national origin, or sex);
- The Civil Rights Restoration Act of 1987 (PL 100-209) (broadened the scope, coverage and applicability of Title VI of the Civil Rights Act of 1964, the Age Discrimination Act of 1975 and Section 504 of the Rehabilitation Act of 1973, by expanding the definition of the terms "programs or activities" to include all of the programs or activities of the Federal-aid recipients, sub-recipients and Subcontractors, whether such programs or activities are Federally funded or not);
- Titles II and III of the Americans with Disabilities Act of 1990, which prohibit discrimination on the basis of disability in the operation of public entities, public and private transportation systems, places of public accommodation, and certain testing entities (42 USC §§ 12131 – 12189) as implemented by U.S. Department of Transportation regulations at 49 CFR parts 37 and 38;
- The Federal Aviation Administration's Nondiscrimination statute (49 USC § 47123) (prohibits discrimination on the basis of race, color, national origin, and sex);
- Executive Order 12898, Federal Actions to Address Environmental Justice in Minority Populations and Low-Income Populations, which ensures nondiscrimination against minority populations by discouraging programs, policies, and activities with disproportionately high and adverse human health or environmental effects on minority and low-income populations;
- Executive Order 13166, Improving Access to Services for Persons with Limited English Proficiency, and resulting agency guidance, national origin discrimination includes discrimination because of limited English proficiency (LEP). To ensure compliance with Title VI, you must take reasonable steps to ensure that LEP persons have meaningful access to your programs (70 Fed. Reg. at 74087 to 74100);
- Title IX of the Education Amendments of 1972, as amended, which prohibits you from discriminating because of sex in education programs or activities (20 USC 1681 et seq).

ADDITIONAL FEDERAL REQUIREMENTS
To the extent applicable to the services and/or goods provided under this Agreement, Contractor and any of its subcontractors used as part of this Agreement, expressly agree to adhere to the following provisions, as required:

Activities Abroad. Contractor agrees that with regard to activities undertaken pursuant to this Agreement, such activities carried on outside the United States are coordinated as necessary with appropriate government authorities and the appropriate licenses, permits, or approvals are obtained.

Controlled Substances. Contractor agrees that it shall not knowingly use funds provided under this Agreement to support activities that promote the legalization of any drug or other substance included in Schedule I of the schedule of controlled substances established by section 202 of the Controlled Substances Act, 21 U.S.C. 812.

Human Rights. Contractor assures that the human rights of all persons with developmental disabilities (especially those without familial protection) who are receiving treatment, services or habilitation under programs assisted under this title, will be protected consistent with P.L. 88-164, Title I, s. 110, as amended, 42 U.S.C. s. 6009, the

federal Developmental Disabilities Assistance and Bill of Rights Act, and s. 393.13, Fla. Stat., Florida's Bill of Rights of Persons with Developmental Disabilities.

Restrictions on Abortion and on Distribution of Sterile Needles. Contractor agrees that it shall not use funds provided under this Agreement for an abortion. Further, Contractor agrees that funds shall not be used to carry out any program of distributing sterile needles or syringes for hypodermic injection of any illegal drug.

U.S. Flag Air Carrier. Contractor agrees that as it pertains to the services provided under this Agreement, U.S. flag air carriers shall be used to the maximum extent possible when commercial air transportation is the means of travel between the United States and a foreign country or between foreign countries.

U.S. Patriot Act; Public Health Security & Bioterrorism Preparedness & Response Act. Contractor will comply with the Uniting and Strengthening America by Providing Appropriate Tools Required to Intercept and Obstruct Terrorism Act (USA Patriot Act) amending 18 U.S.C. 175-175c.; The Public Health Security and Bioterrorism Preparedness and Response Act of 2002, 42 U.S.C. 201.

Trafficking Victims Protection Act. Contractor will comply with the requirements of Section 106(g) of the Trafficking Victims Protection Act (TVPA) of 2000, as amended (22 U.S.C. 7104) which prohibits Contractor/consultant from (1) engaging in severe forms of trafficking in persons during the period of time that this Contractor Agreement is in effect; (2) procuring a commercial sex act during the period of time that this Contractor Agreement is in effect; or (3) using forced labor in the performance of the Contractor services under this Contractor Agreement. This Contractor Agreement may be unilaterally terminated immediately by County for Contractor's violating this provision, without penalty.

Gun Control – Consolidation Appropriations Act, 2017, Pub. L. 115-31, Section 217. None of the funds made available under this Contractor Agreement may be used in whole or in part to advocate or promote gun control.

Clean Air Act (42 U.S.C. 7401-7671q.) and the Federal Water Pollution Contractor Agreement Act (33 U.S.C. 1251-1387) as amended. The Contractor agrees to comply with all applicable standards, orders or regulations issued pursuant to the Clean Air Act, as amended, 42 U.S.C. § 7401 et seq. and Federal Water Pollution Control Act, as amended, 33 U.S.C. 1251 et seq.

Procurement of Recovered Materials. Contractor and any subcontractor agree to comply with Section 6002 of the Solid Waste Disposal Act, as amended by the Resource Conservation and Recovery Act, and the regulatory provisions of 40 CFR Part 247. In the performance of this Agreement and to the extent practicable, the Contractor and subcontractor are to use products containing the highest percentage of recovered materials for items designated by the Environmental Protection Agency (EPA) under 40 CFR Part 247.

Debarment and Suspension. This Agreement is a covered transaction for purposes of 2 C.F.R. Part 180 and 2 C.F.R. Part 3000. As such, the Contractor is required to verify that none of the Contractor's principals (defined at 2 C.F.R s.180.995) or its affiliates (defined at 2 C.F.R. s. 180.905) are excluded (defined at 2 C.F.R. s. 180.940) or disqualified (defined at 2 C.F.R. s 180.935). The Contractor must comply with 2 C.F.R. Part 180, subpart C and 2 C.F.R. Part 3000, subpart C, and must include a requirement to comply with these regulations in any lower tier covered transaction it enters into. This certification is a material representation of fact relied upon by Charlotte County. If it is later determined that the Contractor did not comply with 2 C.F.R. Part 180, subpart C, and 2 C.F.R. Part 3000, subpart C, in addition to remedies made available to Charlotte County, the federal government may pursue available remedies, including but not limited to suspension and/or debarment. The bidder or proposer agrees to comply with the requirements of 2 C.F.R. Part 180, subpart C and 2 C.F.R. Part 3000, subpart C while this offer is valid and throughout the period of any contract that may arise from this offer. The bidder or proposer further agrees to include a provision requiring such compliance in its lower tier covered transaction.

Equal Employment Opportunity (2 CFR Part 200, Appendix II(C); 41 CFR § 61-1.4; 41 CFR 61-4.3; Executive Order 11246). During the performance of this Agreement, the Contractor agrees as follows: (1) The Contractor will not discriminate against any employee or applicant for employment because of race, color, religion, sex, sexual orientation, gender identity, or national origin. The Contractor will take affirmative action to ensure that applicants are employed, and that employees are treated during employment, without regard to their race, color, religion, sex, sexual orientation, gender identity, or national origin. Such action shall include, but not be limited to, the following: employment, upgrading, demotion, or transfer; recruitment or recruitment advertising; layoff, or termination; rates of pay or other forms of compensation; and selection for training, including apprenticeship. The Contractor agrees to post in conspicuous places, available to employees and applicants for employment, notices to be provided setting forth the provisions of this nondiscrimination clause; (2) The Contractor will, in all solicitations or advertisements for employees placed by or on behalf of the Contractor, state that all qualified applicants will receive consideration for employment without regard to race, color, religion, sex, sexual orientation, gender identity, or national origin; (3) The contractor will not discharge or in any other manner discriminate against any employee or applicant for employment because such employee or applicant has inquired about, discussed, or disclosed the compensation of the employee or applicant or another employee or applicant. This provision shall not apply to instances in

which an employee who has access to the compensation information of other employees or applicants as a part of such employee's essential job functions discloses the compensation of such other employees or applicants to individuals who do not otherwise have access to such information, unless such disclosure is in response to a formal complaint or charge, in furtherance of an investigation, proceeding, hearing, or action, including an investigation conducted by the employer, or is consistent with the contractor's legal duty to furnish information; (4) The Contractor will send to each labor union or representative of workers with which it has a collective bargaining agreement or other Contract or understanding, a notice to be provided advising the said labor union or workers' representatives of the Contractor's commitments under this section, and shall post copies of the notice in conspicuous places available to employees and applicants for employment; (5) The Contractor will comply with all provisions of Executive Order 11246 of September 24, 1965, and of the rules, regulations, and relevant orders of the Secretary of Labor; (6) The Contractor will furnish all information and reports required by Executive Order 11246 of September 24, 1965, and by rules, regulations, and orders of the Secretary of Labor, or pursuant thereto, and will permit access to their books, records, and accounts by the administering agency and the Secretary of Labor for purposes of investigation to ascertain compliance with such rules, regulations, and orders.; (7) In the event of the Contractor's noncompliance with the nondiscrimination clauses of this Contract or with any of the said rules, regulations, or orders, this Contract may be canceled, terminated, or suspended in whole or in part and the Contractor may be declared ineligible for further Government Contracts or federally assisted construction contracts in accordance with procedures authorized in Executive Order 11246 of September 24, 1965, and such other sanctions may be imposed and remedies invoked as provided in Executive Order 11246 of September 24, 1965, or by rule, regulation, or order of the Secretary of Labor, or as otherwise provided by law; (8) The Contractor will include the portion of the sentence immediately preceding paragraph (1) and the provisions of paragraphs (1) through (8) in every subcontract or purchase order unless exempted by rules, regulations, or orders of the Secretary of Labor issued pursuant to section 204 of Executive Order 11246 of September 24, 1965, so that such provisions will be binding upon each subcontractor or vendor. The Contractor will take such action with respect to any subcontract or purchase order as the administering agency may direct as a means of enforcing such provisions, including sanctions for noncompliance. *Provided, however*, that in the event a contractor becomes involved in, or is threatened with, litigation with a subcontractor or vendor as a result of such direction by the administering agency, the contractor may request the United States to enter into such litigation to protect the interests of the United States.

Domestic Preference for Procurements. In accordance with 2 CFR 200.322, as appropriate and to the extent consistent with law, to the greatest extent practicable when using federal funds for the services provided in this Agreement, Contractor shall provide a preference for the purchase, acquisition, or use of goods and products or materials produced in the United States. This includes, but is not limited to, iron, aluminum, steel, cement, and other manufactured products.

Prohibition on certain telecommunications and video surveillance services or equipment. In accordance with 2 CFR 200.216, Contractor and any subcontractors are prohibited to obligate or spend federal funds to: (1) procure or obtain, (2) extend or renew a Contractor Agreement to procure or obtain; or (3) enter into a Contractor Agreement to procure or obtain equipment, services, or systems that use covered telecommunications equipment or services as a substantial or essential component of any system, or as critical technology as part of any system. As described in Pub. L. 115-232, section 889, covered telecommunications equipment is telecommunications equipment produced by Huawei Technologies Company or ZTE Corporation (or any subsidiary or affiliate of such entities). i. For the purpose of public safety, security of government facilities, physical security surveillance of critical infrastructure, and other national security purposes, video surveillance and telecommunications equipment produced by Hytera Communications Corporation, Hangzhou Hikvision Digital Technology Company, or Dahua Technology Company (or any subsidiary or affiliate of such entities). ii. Telecommunications or video surveillance services provided by such entities or using such equipment. iii. Telecommunications or video surveillance equipment or services produced or provided by an entity that the Secretary of Defense, in consultation with the Director of the National Intelligence or the Director of the Federal Bureau of Investigation, reasonably believes to be an entity owned or controlled by, or otherwise, connected to the government of a covered foreign country.

Enhanced Whistleblower Protections. The National Defense Authorization Act of 2013 extending whistleblower protections to Contractor employees may apply to the Federal grant award dollars involved with this Agreement.

Federal Funding Accountability and Transparency Act (FFATA). In accordance with FFATA, the Contractor shall, upon request, provide the County the names and total compensation of the five most highly compensated officers of the entity, if the entity in the preceding fiscal year received 80 percent or more of its annual gross revenues in federal awards, received $25,000,000 or more in annual gross revenues from federal awards, and if the public does not have access to information about the compensation of the senior executives of the entity through periodic reports filed under section 13(a) or 15(d) of the Securities Exchange Act of 1934 or section 6104 of the Internal Revenue Code of 1986.

Federal Awardee Performance and Integrity Information System (FAPIIS). The Contractor shall update the information in the Federal Awardee

Performance and Integrity Information System (FAPIIS) on a semi-54r

Sub Agreements/Assignments and W/MBE. Contractor shall not subcontract, nor assign this Agreement, or any part of the services provided under this Agreement, without prior written consent of County. In accordance with 45 CFR s. 75.330 and 2 CFR s. 200.321, Contractor acknowledges that if it subcontracts any work pertaining to this Agreement, it will take all necessary affirmative steps to assure that minority businesses, women's business enterprises, and labor surplus area firms are used when possible. Affirmative Steps include: (1) Placing qualified small and minority businesses and women's business enterprises on solicitation lists; (2) Assuring that small and minority businesses, and women's business enterprises are solicited whenever they are potential sources; (3) Dividing total requirements, when economically feasible, into smaller tasks or quantities to permit maximum participation by small and minority businesses, and women's business enterprises; (4) Establishing delivery schedules, where the requirement permits, which encourage participation by small and minority businesses, and women's business enterprises; (5) Using the services and assistance, as appropriate, of such organizations as the Small Business Administration and the Minority Business Development Agency of the Department of Commerce.

Davis-Bacon Act: For all construction contracts and other projects, if applicable, the Contractor agrees to comply with all provisions of the Davis Bacon Act as amended (40 U.S.C. §§ 3141-3144 and 3136-3148), and to require all of its subcontractors performing work under this Agreement to adhere to same. The Contractor and its subcontractors are required to pay wages to laborers and mechanics at a rate not less than the prevailing wages specified in a wage determination made by the Secretary of Labor. In addition, the Contractor and its subcontractors are required to pay wages not less than once a week. If the federally funded award contains Davis Bacon provisions, the Contractor shall place a copy of the current prevailing wage determination issued by the Department of Labor in the solicitation documents. The decision to award a contract shall be conditioned upon the acceptance of the wage determination. The Contractor shall report all suspected or reported violations of the Davis-Bacon Act to the County.

Copeland Anti Kick Back Act: Contractor and its subcontractors shall comply with all the requirements of the Copeland Anti-Kickback Act (18 U.S.C. § 874 and 40 U.S.C. § 3145, as supplemented by Department of Labor regulations at 29 CFR Part 3), which are incorporated by reference to this Agreement. Contractor and its subcontractors are prohibited from inducing by any means any person employed in the construction, completion or repair of public work to give up any part of the compensation to which he or she is otherwise entitled. The contractor or subcontractors shall insert in any subcontracts the clause above and such other clauses as FEMA may by appropriate instructions require, and also a clause requiring subcontractors to include these clauses in any lower tier contracts. The prime contractor shall be responsible for the compliance by any subcontractor or lower tier subcontractor with all of these contract clauses. A breach of the contract clauses above may be grounds for termination of the contract, and for debarment as a contractor and subcontractor as provided in 29 C.F.R. s. 5.12.

Contract Work Hours and Safety Standards Act (40 U.S.C. §§ 3701–3708 and 29 C.F.R. §§ 5.5 (b)(1)-(4).
Contracts awarded in excess of $100,000 that involve the employment of mechanics and laborers must be in compliance with 40 U.S.C. ss.3702 and 3704, as supplemented by the Department of Labor Regulations in 29 C.F.R. Part 5.
(1) Overtime requirements. No contractor or subcontractor contracting for any part of the contract work which may require or involve the employment of laborers or mechanics shall require or permit any such laborer or mechanic in any workweek in which he or she is employed on such work to work in excess of forty hours in such workweek unless such laborer or mechanic receives compensation at a rate not less than one and one-half times the basic rate of pay for all hours worked in excess of forty hours in such workweek. (2) Violation; liability for unpaid wages; liquidated damages. In the event of any violation of the clause set forth in paragraph (b)(1) of this section the contractor and any subcontractor responsible therefor shall be liable for the unpaid wages. In addition, such contractor and subcontractor shall be liable to the United States (in the case of work done under contract for the District of Columbia or a territory, to such District or to such territory), for liquidated damages. Such liquidated damages shall be computed with respect to each individual laborer or mechanic, including watchmen and guards, employed in violation of the clause set forth in paragraph (b)(1) of this section, in the sum of $31 for each calendar day on which such individual was required or permitted to work in excess of the standard workweek of forty hours without payment of the overtime wages required by the clause set forth in paragraph (b)(1) of this section. (3) Withholding for unpaid wages and liquidated damages. The County shall upon its own action or upon written request of an authorized representative of the Department of Labor withhold or cause to be withheld, from any moneys payable on account of work performed by the contractor or subcontractor under any such contract or any other federal contract with the same prime contractor, or any other federally-assisted contract subject to the Contract Work Hours and Safety Standards Act, which is held by the same prime contractor, such sums as may be determined to be necessary to satisfy any liabilities of such contractor or subcontractor for unpaid wages and liquidated damages as provided in the clause set forth in paragraph (b)(2) of this section. (4) Subcontracts. The contractor or subcontractor shall insert in any subcontracts the clauses set forth in paragraph (b)(1) through (4) of this section and also a clause requiring the subcontractors to include these clauses in any lower tier subcontracts. The prime contractor shall be responsible for

compliance by any subcontractor or lower tier subcontractor with the clauses set forth in paragraphs (b)(1) through (4) of this section."

Byrd Anti-Lobbying (31 U.S.C s. 1352, as amended).
Contractors who apply or bid for an award of more than $100,000 shall file the required Anti-Lobbying certification at the time of bid. Each tier certifies to the tier above that it will not and has not used federally appropriated funds to pay any person or organization for influencing or attempting to influence an officer or employee of any agency, a Member of Congress, officer or employee of Congress, or an employee of a Member of Congress in connection with obtaining any federal contract, grant, or any other award covered by 31 U.S.C. s. 1352. Each tier shall also disclose any lobbying with non-federal funds that takes place in connection with obtaining any federal award. Such disclosures are forwarded from tier to tier up to the recipient who in turn will forward the certification(s) to the Federal awarding agency.

DHS Seal, Logo and Flags.
The Contractor shall not use the DHS seal(s), logos, crests, or reproductions of the flags or likenesses of DHS agency officials without specific FEMA pre-approval. The contractor shall include this provision in any subcontracts.

Access to Records.
The Contractor agrees to provide Charlotte County, the FDEM, the FEMA Administrator, the Comptroller General of the United States, any other Federal grantor, or any of their authorized representatives, access to any books, documents, papers, and records of the Contractor which are directly pertinent to this contract for the purposes of making audits, examinations, excerpts, and transcriptions. The Contractor agrees to permit any of the foregoing parties to reproduce by any means whatsoever or to copy excerpts and transcriptions as reasonably needed. The Contractor agrees to provide the FEMA Administrator or the administrator of any other Federal grantor, or their authorized representatives, access to construction or other work sites pertaining to the work being completed under the agreement. In compliance with section 1225 of the Disaster Recovery Reform Act of 2018, Charlotte County and the Contractor acknowledge and agree that no language in this agreement is intended to prohibit audits or internal review by the FEMA Administrator, any other Federal grantor, or the Comptroller General of the United States.

Compliance with Federal Law, Regulations, and Executive Orders and Acknowledgement of Federal Funding.
This is an acknowledgement that FEMA financial assistance will be used to fund all or a portion of the agreement. The Contractor will comply with all applicable federal law, regulations, executive orders, FEMA policies, procedures and directives.

No Obligation by Federal Government.
The federal government is not a party to this agreement and is not subject to any obligations or liabilities to the non-federal entity, contractor, or any other party pertaining to any matter resulting from the agreement.

Program Fraud and False or Fraudulent Statements or Related Acts.
The Contractor acknowledges that 31 U.S.C. Chapter 38 (Administrative Remedies for False Claims and Statements) applies to the Contractor's actions pertaining to this agreement.

Copyright and Data Rights.
The Contractor grants to Charlotte County a paid-up royalty-free, nonexclusive, irrevocable, worldwide license in data first produced in the performance if this agreement to reproduce, publish, or otherwise use, including prepare derivative works, distribute copies to the public, and perform publicly and display publicly such data. For data required by the agreement but not first produced in the performance of this agreement, the Contractor will identify such data and grant to Charlotte County or acquire on its behalf a license of the same scope as for data first produced in the performance if this agreement.

Remedies.
Unless otherwise provided by the agreement, all claims, counter-claims, disputes and other matters in question between the County and the Contractor arising out of or relating to the agreement, or the breach of it, that cannot be resolved by and between the parties after conferring in good faith, will be decided by a court of competent jurisdiction pursuant to Florida law. If such dispute is in state court, venue shall be in the Twentieth Judicial Circuit Court in and for Charlotte County, Florida. If in federal court, venue shall be in the U.S. District Court for the Middle District of Florida, Ft. Myers Division.

Termination for Cause or Convenience.
The County may terminate the agreement at any time, for cause or convenience, by providing written notice to the Contractor, of determined by the County to be in the County's best interest. If the agreement is terminated, the Contractor shall be paid for all work actually performed, and all costs actually incurred prior to contract termination.

ENVIRONMENTAL COMPLIANCE

In performing under this Agreement, Contractor and its subcontractors, to the extent applicable, shall comply with all of the federal environmental statutes, regulations, and executive orders listed below, as applicable:

1.The National Environmental Policy Act (42 U.S.C. § 4321 et. seq.)

2.The Endangered Species Act (16 U.S.C. § 1531 et seq.)

3.Magnuson-Stevens Fishery Conservation and Management Act (16 U.S.C. § 1801 et seq.)

4.Clean Water Act Section 404 (33 U.S.C. § 1344 et seq.)

5.The Migratory Bird Treaty Act (16 U.S.C. §§ 703-712); Bald and Golden Eagle Protection Act (16 U.S.C. § 668 et seq.), and Executive Order No. 13186, Responsibilities of Federal Agencies to Protect Migratory Birds

6.National Historic Preservation Act (54 U.S.C. § 300101 et seq.) and the Advisory Council on Historic Preservation Guidelines (36 CFR part 800)

7.Clean Air Act (42 U.S.C. § 7401 et seq.), Federal Water Pollution Control Act (33 U.S.C. § 1251 et seq.) (Clean Water Act), and Executive Order 11738 ("Providing for administration of the Clean Air Act and the Federal Water Pollution Control Act with respect to Federal contracts, grants or loans"). Violations must be reported to the County and the Regional Office of the Environmental Protection Agency (EPA) immediately upon discovery.

8.The Flood Disaster Protection Act (42 U.S.C. § 4002 et seq.)

9.Executive Order 11988 ("Floodplain Management") and Executive Order 11990 ("Protection of Wetlands")

10.Executive Order 13112 ("Invasive Species")

11.The Coastal Zone Management Act (16 U.S.C. § 1451 et seq.)

12.The Coastal Barriers Resources Act (16 U.S.C. § 3501 et seq.)

13.The Wild and Scenic Rivers Act (16 U.S.C. § 1271 et seq.)

14.The Safe Drinking Water Act (42 U.S.C. § 300 et seq.)

15.The Resource Conservation and Recovery Act (42 U.S.C. § 6901 et seq.)

16.The Comprehensive Environmental Response, Compensation, and Liability Act (Superfund) (42 U.S.C. § 9601 et seq.)

17. Executive Order 12898 ("Environmental Justice in Minority Populations and Low Income Populations")

18.Rivers and Harbors Act (33 U.S.C. § 407)

19.Marine Protection, Research and Sanctuaries Act (Pub. L. 92-532, as amended), National Marine Sanctuaries Act (16 U.S.C. § 1431 et seq.), and Executive Order 13089 ("Coral Reef Protection")

20.Farmland Protection Policy Act (7 U.S.C. 4201 et seq.)

21.Fish and Wildlife Coordination Act (16 U.S.C. 661 et seq.)

22.Pursuant to 2 CFR §200.322, Contractor and its contractors must comply with Section 6002 of the Solid Waste Disposal Act, as amended by the Resource Conservation and Recovery Act. The requirements of Section 6002 include procuring only items designated in guidelines of the Environmental Protection Agency (EPA) at 40 CFR Part 247 that contain the highest percentage of recovered materials practicable, consistent with maintaining a satisfactory level of competition, where the purchase price of the item exceeds $10,000 or the value of the quantity acquired during the preceding fiscal year exceeded $10,000; procuring solid waste management services in a manner that maximizes energy and resource recovery; and establishing an affirmative procurement program for procurement of recovered materials identified in the EPA guidelines.

END OF PART III

PART IV
PROPOSAL FORMAT & EVALUATION METHOD

RP-21 RULES FOR PROPOSALS:
A. The proposal must name all persons or entities interested in the proposals as principals. The proposal must declare that it is made without collusion with any other person or entity submitting a proposal pursuant to this RFP.

B. The following is an excerpt from Charlotte County Resolution #2011-221 and applies to this proposal: **"Any questions regarding a project or submittal shall be directed to the designated person in the Purchasing Division for a response. From the time the notice of request for proposals is published until the contract is awarded, there shall not be any contact between a proposer, agent or other representative and any member of the selection committee, user department, Administration, or any member of the Board of County Commissioners regarding the project or proposal submitted by any proposer. Should any member of the selection committee initiate contact or fail to report any contact, such committee member may be subject to disciplinary action up to and including dismissal. If any proposer, agent or other representative contacts any committee member, user department, Administration or member of the Board of County Commissioners regarding a request for proposals or submitted proposal, the proposer is subject to sanctions up to and including having the County disqualify the firm's submittal."**

C. For your information, the members of the Professional Services Committee for this project are as follows:

Lonne Moore, Projects Manager, Community Services
Matt Logan, Projects Manager, Public Works
Scott Brouillard, Project Manager, Facilities Management

RP-22 PROPOSAL FORMAT: Firms shall prepare their proposals using the format outlined in the Consultant Evaluation Form on pages 19 and 20.

RP-23 PROPOSAL REQUIREMENTS: In addition to the information required in the Consultant Evaluation Form, provide the following information:

A. Team Organization, Management and General Qualifications - Multiple firm or joint venture teams should clearly identify the roles and responsibilities of the proposed participants. Team and project management structure should be documented. The principal within the prime firm responsible for the project and the proposed project manager should be identified and a statement presented that those persons would not be substituted without the express permission of the County. Teams should demonstrate experience in previous similar projects.

B. Work Plan - Firms submitting should demonstrate their understanding of the project. An outline description of anticipated project tasks in sequence should be prepared. Firms should identify anticipated deliverables and a general schedule for a project of this magnitude.

C. Individual Qualifications - Firms should submit the resumes of key people. Firms should specifically identify the **lead designer** on the project and his/her qualifications. Provide a statement indicating that the **designer** will not be substituted without the express permission of the County.

D. Experience and References - Supply materials indicative of experience in other projects of similar complexity. A reference list for each firm is required, including name, project and telephone number. A reference list for the **lead designer** is required identifying name, project and telephone number.

Proposals are to be typed on the firm's letterhead, specifically referring to the project and the scope of services, containing all required information. That information is to be submitted electronically. Please visit http://bit.ly/3TYAyKa and follow given instructions.

RP-24 EVALUATION METHOD AND CRITERIA:
A. General - The County shall be the sole judge as to the merits of the proposal, and the resulting agreement. The County's decision will be final. **Please note that proposals will be evaluated on content, *not bulk*.**

The County's evaluation criteria will include, but shall not be limited to, considerations listed on **Proposal Requirements, page 17.** As mentioned in PROPOSAL FORMAT, the proposals should be prepared using the format outlined in the Consultant Evaluation Form on pages 19 and 20.

B. Selection **-** The Professional Services Committee shall evaluate the proposals submitted. Telephone discussions will be held with all firms submitting and a short list of firms from proposals will be ranked in order. Final approval will be by the Board of County Commissioners who may request public presentation.

RP-25 ANTICIPATED SCHEDULE: The projected schedule of events for this proposal is as follows:

09/24/2025	County advertises for proposals
10/15/2025	Proposal due date
10/23/2025	Professional Services Committee short lists firms

EVALUATION FORM

CONSULTANT EVALUATION FORM CHARLOTTE COUNTY, FLORIDA				
RFP# 20250718, DESIGN –LIVE OAK POINT PARK PHASE 2				
Evaluation Criteria	***Value***	***Assigned Value***	***Weight***	***Score***
I. TEAM PROPOSED FOR THIS PROJECT A. Background of the personnel 1. Project Manager 2. Subconsultants, and other Key Personnel B. Resumes	1-5		X 10	
II. PROPOSED MANAGEMENT PLAN A. Team Organization 1. Site Analysis/Permitting Phase 2. Schematic Design Phase 3. Design Development Phase 4. Construction Document Phase 5. Construction Observation Phase B. Roles and Responsibilities of Participants	1-5		X 15	
III. PREVIOUS EXPERIENCE OF TEAM PROPOSED FOR THIS PROJECT A. Relevant work history with public/government facilities and CM method B. Relevant work history with Marine/Seawall/Civil, Coastal, Engineering and Structural projects. C. Permitting experience with coastal regulatory agencies. D. Design within a fixed project budget.	1-5		X 15	
IV. PROJECT CONTROL A. Schedule 1. What techniques are planned to assure that schedule will be met? 2. Who will be responsible to assure that schedule will be met? B. Cost 1. What control techniques are planned? 2. Demonstrate ability to meet project cost control. 3. Who will be responsible for cost control? C. Recent, current and projected workload	1-5		X 10	
V. PRESENT PROPOSED DESIGN APPROACH FOR THIS PROJECT A. Describe proposed design methodology, including phased approach. B. What problems do you anticipate and how do you propose to solve them? C. Describe innovative approaches in production and design.	1-5		X 15	
VI. PRESENT EXAMPLES OF RECENTLY ACCOMPLISHED SIMILAR PROJECTS A. Describe the projects to demonstrate. 1. Schedule and Cost control. 2. Construction problems and means taken to solve them. 3. Any additional construction costs caused by design deficiencies, not program changes. 4. Project delivering seawalls.	1-5		X 17	

VII. DESCRIBE YOUR EXPERIENCE AND CAPABILITIES IN THE FOLLOWING AREAS. A. Value Engineering. B. Cost Analysis and Control. C. Life Cycle Cost Analysis. D. Environmental Assessment. E. Permitting for Charlotte County. F. Specialized Marine/Coastal Experience. G. Working on Public and/or Government Facilities and Amenities.	1-5		X 15	
VIII. VOLUME OF WORK – TOTAL OF PAYMENTS RECEIVED FROM COUNTY WITHIN THE PAST 24 MONTHS* $0 - $49,999 5 points $50,000 - $99,999 4 points $100,000 - $199,999 3 points $200,000 - $349,999 2 points $350,000 - $499,999 1 points $500,000 + 0 points *Based upon information provided on Proposal Submittal Signature Form, Magnitude of Charlotte County Projects.	0-5		X 01	
IX. LOCATION Describe the Prime and Sub-Consultants responsiveness as it relates to the firm's location to the project.	1-5		X 01	
X. LITIGATION – HAVE YOU BEEN NAMED AS A DEFENDANT OR CO-DEFENDANT IN A LAWSUIT IN THE LAST FIVE YEARS? If so, describe circumstances and outcome, including Case Number, Case Name and Court.	1-5		X 01	
XI. MINORITY BUSINESS Certified MBE, Sub-Consultants Certified MBE, and/or Non-Certified MBE.	Yes or No			
REMARKS: The value assigned in judged on a scale of 1 through 5, with 5 being the highest possible value. The two exceptions are: **VIII. Volume of Work**; and **XI. Minority Business. Category VIII. Volume of Work** has a value of 0 through 5 as indicated, and **Category XI. Minority Business –** The County will consider the firm's status as an MBE or a Certified MBE, and also the status of any sub-contractors or sub-consultants proposed to be utilized by the firm, within the evaluation process.				

END OF PART IV

PART V - SUBMITTAL FORMS
PROPOSAL SUBMITTAL SIGNATURE FORM

1.	Project Team Name and Title	Years experience	City of office individual will work out of for this project	City individual's office is normally located	City of individual's residence

2.	Magnitude of Company Operations	
	A) Total professional services fees received within last 24 months:	$
	B) Number of similar projects started within last 24 months:	
	C) Largest single project to date:	$

3.	Magnitude of Charlotte County Projects	
	A) Number of current or scheduled County Projects	
	B) Payments received from the County over the past 24 months (based upon executed contracts with the County).	$

4.	Sub-Consultant(s) (if applicable)	Location	% of Work to be Provided	Services to be Provided

5.	Disclosure of interest or involvement: List below all private sector clients with whom you have an active pending contract and who have an interest within the areas affected by this project. Also, include any properties or interests held by your firm, or officers of your firm, within the areas affected by this project.	
	Firm	Address
	Phone #	Contact Name
	Start Date	Ending Date
	Project Name/Description	

NAME OF FIRM _____

(This form must be completed and returned)

6. Minority Business: **Yes _____ No _____** The County will consider the firm's status as an MBE or a certified MBE, and also the status of any sub-contractors or sub-consultants proposed to be utilized by the firm, within the evaluation process.
Comments or Additional Information:

The undersigned attests to his/her authority to submit this proposal and to bind the firm herein named to perform as per contract, if the firm is awarded the Contract by the County. The undersigned further certifies that he/she has read the Request for Proposal, Terms and Conditions, Insurance Requirements and any other documentation relating to this request and this proposal is submitted with full knowledge and understanding of the requirements and time constraints noted herein.

By signing this form, the proposer hereby declares that this proposal is made without collusion with any other person or entity submitting a proposal pursuant to this RFP.

In accordance with section 287.135, Florida Statutes, the undersigned certifies that the company is not on the Scrutinized Companies with Activities in Sudan List, the Scrutinized Companies with Activities in the Iran Petroleum Energy Sector List, and does not have business operations in Cuba or Syria (if applicable) or the Scrutinized Companies that Boycott Israel List, or is not participating in a boycott of Israel.

As Addenda are considered binding as if contained in the original specifications, it is critical that the Consultant acknowledge receipt of same. The submittal may be considered void if receipt of an addendum is not acknowledged.

Addendum No._____ Dated_____ Addendum No._____ Dated_____ Addendum No._____ Dated_____

Addendum No._____ Dated_____ Addendum No._____ Dated_____ Addendum No._____ Dated_____

Type of Organization (please check one): INDIVIDUAL (__) PARTNERSHIP (__)
CORPORATION (__) JOINT VENTURE (__)

_____ _____
Firm Name Telephone

_____ _____
Fictitious or d/b/a Name Federal Employer Identification Number (FEIN)

_____
Home Office Address

_____ _____
City, State, Zip Number of Years in Business

_____
Address: Office Servicing Charlotte County, other than above

_____ _____
Name/Title of your Charlotte County Rep. Telephone

_____
Name/Title of Individual Binding Firm (Please Print)

_____ _____
Signature of Individual Binding Firm Date

_____
Email Address

(This form must be completed & returned)

DRUG FREE WORKPLACE FORM

The undersigned vendor in accordance with Florida Statute 287.087 hereby certifies that _____ does: (name of business)

1. Publish a statement notifying employees that the unlawful manufacture, distribution, dispensing, possession, or use of a controlled substance is prohibited in the workplace and specifying the actions that will be taken against employees for violations of such prohibition.

2. Inform employees about the dangers of drug abuse in the workplace, the business's policy of maintaining a drug-free workplace, any available drug counseling, rehabilitation, and employee assistance programs, and the penalties that may be imposed upon employees for drug abuse violations.

3. Give each employee engaged in providing the commodities or contractual services that are under bid a copy of the statement specified in subsection (1).

4. In the statement specified in subsection (1), notify the employees that, as a condition of working on the commodities or contractual services that are under bid, the employee will abide by the terms of the statement and will notify the employer of any conviction of, or plea of guilty or nolo contendere to, any violation of Chapter 893 or of any controlled substance law of the United States or any state, for a violation occurring in the workplace no later than five (5) days after such conviction.

5. Impose a sanction on or require the satisfactory participation in a drug abuse assistance or rehabilitation program if such is available in the employee's community, by any employee who is so convicted.

6. Make a good faith effort to continue to maintain a drug-free workplace through implementation of this section.

As the person authorized to sign the statement, I certify that this firm complies fully with the above requirements.

_____
Proposer's Signature

_____
Date

NAME OF FIRM _____

(This form must be completed and returned)

HUMAN TRAFFICKING AFFIDAVIT
for Nongovernmental Entities Pursuant To FS. §787.06

Charlotte County Contract #20250718

The undersigned on behalf of the entity listed below, (the "Nongovernmental Entity"), hereby attests under penalty of perjury as follows:

1. I am over the age of 18 and I have personal knowledge of the matters set forth except as otherwise set forth herein.

2. I am an officer or representative of the Nongovernmental Entity and authorized to provide this affidavit on the Company's behalf.

3. Nongovernmental Entity does not use coercion for labor or services as defined in Section 787.06, Florida Statutes.

4. This declaration is made pursuant to Section 92.525, Florida Statutes. I understand that making a false statement in this declaration may subject me to criminal penalties.

Under penalties of perjury, I declare that I have read the foregoing Human Trafficking Affidavit and that the facts stated in it are true.

Further Affiant sayeth naught.

_____
Signature

_____
Printed Name

_____
Title

_____
Nongovernmental Entity

_____
Date

NAME OF FIRM _____

(This form must be completed and returned)

BYRD ANTI-LOBBYING CERTIFICATION

Certification for Contracts, Grants, Loans, and Cooperative Agreements

The undersigned certifies, to the best of his or her knowledge and belief, that:

(1) No Federal appropriated funds have been paid or will be paid, by or on behalf of the undersigned, to any person for influencing or attempting to influence an officer or employee of any agency, a Member of Congress, an officer or employee of Congress, or an employee of a Member of Congress in connection with the awarding of any Federal contract, the making of an Federal grant, the making of any Federal loan, the entering into of any cooperative agreement, and the extension, continuation, renewal, amendment, or modification of any Federal contract, grant, loan, or cooperative agreement.

(2) If any funds other than Federal appropriated funds have been paid or will be paid to any person for influencing or attempting to influence an officer or employee of any agency, a Member of Congress, an officer or employee of Congress, or an employee of a Member of Congress in connection with this Federal contract, grant, loan, or cooperative agreement, the undersigned shall complete and submit Standard Form-LLL, "Disclosure Form to Report Lobbying," in accordance with its instructions.

(3) The undersigned shall require that the language of this certification be included in the award documents for all subawards at all tiers (including subcontracts, subgrants, and contracts under grants, loans and cooperative agreements) and that all subrecipients shall certify and disclose accordingly.

This certification is a material representation of fact upon which reliance was placed when this transaction was made or entered into. Submission of this certification is a prerequisite for making or entering into this transaction imposed by Section 1352, Title 31, U.S.C. Any person who fails to file the required certification shall be subject to a civil penalty of not less than $10,000 and not more than $100,000 for each such failure.

_____ _____

Date Type or Print Name

_____

Signature

_____

Title

END OF PART V

NAME OF FIRM _____

(This form must be completed and returned)