F.D.O.T. Bridge #014056

CONSTRUCTION PLANS
FOR
SOUTH GULF COVE MSBU BRIDGES
INGRAHAM BOULEVARD AT PRESIDENT WATERWAY
FOR
CHARLOTTE COUNTY BOARD OF COUNTY COMMISSIONERS
CHARLOTTE COUNTY, FLORIDA

SECTION 21
TOWNSHIP 41 SOUTH, RANGE 21 EAST

INDEX OF PLANS

SHEET NO.	DESCRIPTION
C1	COVER SHEET - LOCATION MAP
C2	GENERAL NOTES, ABBREVIATIONS AND LEGENDS
C3	AERIAL MAP
C4	PLAN AND PROFILE
C5.1 to C5.2	EXISTING AND PROPOSED CROSS SECTIONS
C6	TYPICAL DETAILS AND SECTIONS
C7	EROSION CONTROL DETAILS
C8.1 to C8.2	CONCEPTUAL MAINTENANCE OF TRAFFIC PLAN (FOR INFORMATIONAL PURPOSES ONLY)
	BRIDGE PLANS

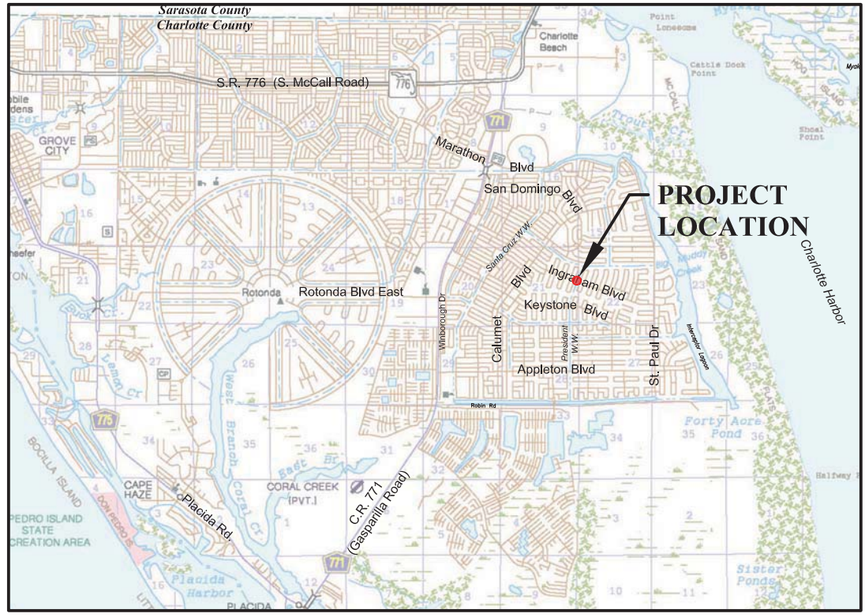

LOCATION MAP

0 1/2 1 2
SCALE IN MILES

APRIL 27, 2023
Revised - 9/19/23

County Commissioners
Ken Doherty, District 1
Christopher Constance, District 2
Bill Truex, District 3
Stephen R. Deutsch, District 4
Joe Tiseo, District 5

Director of Public Works
John Elias

County Engineer
Joanne Vernon, P.E.

KCI TECHNOLOGIES, INC.
4041 CRESCENT PARK DRIVE
TAMPA, FL 33578
PHONE: (813) 740-2300
RALPH VERRASTRO, P.E. NO. 39784

JOHNSON ENGINEERING, INC.
17833 MURDOCK CIRCLE
PORT CHARLOTTE, FLORIDA 33948
PHONE (941) 625-9919
E.B. #642 & L.B. #642

NOTICE TO ALL CONTRACTORS

IT'S THE LAW IN FLORIDA
2 BUSINESS DAYS BEFORE
YOU DIG
CALL SUNSHINE
1-800-432-4770

STATE, COUNTIES & CITIES ARE "NOT" PART OF THE ONE CALL SYSTEM, THEY MUST BE CALLED INDIVIDUALLY.

BEFORE YOU DIG
STOP
CALL SUNSHINE
1-800-432-4770
AVOID DAMAGE TO UNDERGROUND FACILITIES

Christopher D Beers
Digitally signed by Christopher D Beers
Date: 2023.09.27 10:30:51 -04'00'

REGISTERED PROFESSIONAL ENGINEER
FLORIDA LICENSE NO. 64594

CHRISTOPHER D. BEERS, PE

DATE

SHEET NUMBER
C1

O:\2021\20214193\Engineering\Drawings\214193-COV.dwg (Ing-Pres) DEA Sep 19, 2023 - 11:30am

ABBREVIATIONS

AC	ACRE
ALT	ALTERNATE
ALUM.	ALUMINUM
APPROX.	APPROXIMATE
ASB	ASBESTOS
BM	BENCH MARK
BLDG	BUILDING
BT(B)	BURIED TELEPHONE, QUALITY LEVEL B
BFOT	BURIED FIBER-OPTIC TELEPHONE
BOT	BOTTOM
CB	CATCH BASIN
CF	CUBIC FEET
CI	CAST IRON
CIP	CAST IRON PIPE
CJ	CONSTRUCTION JOINT
CMP	CORRUGATED METAL PIPE
CPP	CORRUGATED PLASTIC PIPE
CO	CLEANOUT
CF	CUBIC FOOT
CY	CUBIC YARD
CU. IN.	CUBIC INCH
C/L	CENTER LINE
CLF	CHAIN LINK FENCE
COL	COLUMN, COLOR
CONC	CONCRETE
CONST	CONSTRUCTION
CONT	CONTINUOUS
CONTR	CONTRACTOR
CTRS	CENTERS
CCUD	CHARLOTTE COUNTY UTILITIES DEPARTMENT
CTL	CENTURY LINK
DIA, ø	DIAMETER
DIM	DIMENSION
DIST.	DISTANCE
DIP	DUCTILE IRON PIPE
DUE	DRAINAGE AND UTILITY EASEMENT
DWG	DRAWING
E	EAST
EL/ELEV	ELEVATION
EQUIP	EQUIPMENT
ERCP	ELLIPTICAL REINFORCED CONCRETE PIPE
ESB	ELECTRICAL SERVICE BOX
EX/EXIST	EXISTING
FND	FOUND
FIN	FINISH
FM	FORCE MAIN
FRP	FIBERGLASS REINFORCED PLASTIC
FT	FEET
GC	GENERAL CONTRACTOR
GPM	GALLONS PER MINUTE
GV	GATE VALVE
GA	GAUGE
GAL	GALLON
GALV	GALVANIZED
GR	GRADE
HDPE	HIGH DENSITY POLYETHYLENE
HOR	HORIZONTAL
HP	HIGH POINT
HYD	HYDRANT
ID	INSIDE DIAMETER
INV	INVERT
IRR	IRRIGATION
LF	LINEAL FEET
LT.	LEFT
LPS	LOW PRESSURE SEWER
M.E.	MATCH EXISTING
MH	MANHOLE
MJ	MECHANICAL JOINT
MAX	MAXIMUM
MECH	MECHANICAL
MES	MITERED END SECTION
MFR	MANUFACTURER
MIN	MINIMUM
MISC	MISCELLANEOUS
MUP	MULTI-USE PATH
N	NORTH
NE	NORTHEAST
NW	NORTHWEST
NTS	NOT TO SCALE
NOM	NOMINAL
O/S	OFFSET
OC	ON CENTERS
OCEW	ON CENTER EACH WAY
OD	OUTSIDE DIAMETER
PED	PEDESTAL
PCF	POUNDS PER CUBIC FOOT
PSF	POUNDS PER SQUARE FOOT
PV	PLUG VALVE
PSI	POUNDS PER SQUARE INCH
PVC	POLYVINYL CHLORIDE
POLY, PE.	POLYETHYLENE
PAVT	PAVEMENT
PC	POINT OF CURVATURE
PCC	POINT OF COMPOUND CURVATURE
PGL	PROPOSED GRADE LINE
P/L	PROPERTY LINE
PR	PROPOSED
PT	POINT OF TANGENCY
PUE	PUBLIC UTILITY EASEMENT
PV	PLUG VALVE
PVI	POINT OF VERTICAL INTERSECTION
PI	POINT OF INTERSECTION
R	RADIUS
RT.	RIGHT
RD	ROAD
RCP	REINFORCED CONCRETE PIPE
REQ'D	REQUIRED
ROW, R/W	RIGHT OF WAY
RU	REUSE LINE
S	SOUTH
SE	SOUTHEAST
SW	SOUTHWEST
SS	SANITARY SEWER
SAN	SANITARY
SCH	SCHEDULE
SECT	SECTION
SEW	SEWER
SH	SHEET
SPEC	SPECIFICATION
SQ	SQUARE
ST	STREET
STA	STATION
STD	STANDARD
SUR	SURFACE
SYM	SYMMETRICAL
TCE	TEMPORARY CONSTRUCTION EASEMENT
TOE	TOE OF SLOPE
TOB	TOP OF BANK
T.O.P.	TOP OF PIPE
THK	THICK
TEL	TELEPHONE
TSB	TELEPHONE SERVICE BOX
TSCB	TRAFFIC SIGNAL CONTROL BOX
TEMP	TEMPORARY
TRANS	TRANSFORMER
TYP	TYPICAL
UE	UTILITY EASEMENT
VERT	VERTICAL
WM	WATER MAIN
W.W.	WATERWAY
W/	WITH
W/O	WITHOUT
WD	WOOD
WT	WEIGHT
WV	WATER VALVE

SYMBOLS

	EXISTING	PROPOSED
PLUG VALVE		
GATE VALVE		
TEE ASSEMBLY		
FIRE HYDRANT		
WATER METER	WM	WM
AIR RELEASE VALVE		
BACKFLOW VALVE ASSEMBLY	BF	BFV
TELEPHONE PEDESTAL	P	T
CABLE PEDESTAL	CATV	CATV
CONCRETE UTILITY POLE		
WOOD UTILITY POLE		
UTILITY POLE ANCHOR		
MAIL BOX		MB
STREET SIGN		
DRAINAGE FLOW DIRECTION ARROW		
SPOT ELEVATION	16.2	6.45

HATCH PATTERNS

PROPOSED CONCRETE PATHWAY

PROPOSED ASPHALTIC CONCRETE PAVEMENT

MILL AND REPAVE EXISTING ASPHALTIC CONCRETE PAVEMENT (1-1/4" AVG. DEPTH)

NOTE:
HATCH PATTERNS ARE FOR ILLUSTRATIVE PURPOSES ONLY, ACTUAL HATCH PATTERNS ON DRAWING MAY VARY IN SCALE & ANGLE

LINETYPES

	EXISTING	PROPOSED
RIGHT-OF-WAY LINE		
CENTER LINE		
EASEMENT		
SWALE CENTER LINE		
FORCE MAIN	FM	FM
SANITARY SEWER	SS	SS
WATER MAIN	WM	WM
IRRIGATION MAIN	IRR	IRR
RE-USE MAIN	RU	RU
OVERHEAD UTILITY LINES	OHE	OHE
FENCE LINE		
GUARDRAIL		
SILT FENCE		
CONTOUR LINES AND ELEVATION	5 6	

CONSTRUCTION NOTES:

1. CONCRETE SIDEWALKS SHALL BE CONSTRUCTED PER F.D.O.T. INDEX NO. 522-001 AND F.D.O.T. STANDARD SPECIFICATION NO. 522 EXCEPT FOR CURB CUT RAMP RUNS WHICH SHALL BE FINISHED IN ACCORDANCE WITH INDEX NO. 522-002 EXCEPT AMENDMENTS TO DESIGN PER CHARLOTTE COUNTY PUBLIC WORKS – ENGINEERING DIVISION.
2. THERE SHALL BE NO CHANGE OR DEVIATION OF THESE PLANS OR SPECIFICATIONS UNLESS PRIOR WRITTEN APPROVAL FROM THE ENGINEER IS OBTAINED.
3. THE CONTRACTOR SHALL NOTIFY THE ENGINEER IMMEDIATELY IF AND WHEN A POSSIBLE ERROR IS FOUND IN THE PLANS OR STAKED ALIGNMENT AND/OR GRADES. THE ENGINEER MAY ACCEPT, REVISE TO ACCOMMODATE CONDITIONS, OR REJECT THE FACILITY BEING CONSTRUCTED. IT IS IMPERATIVE THAT THE CONTRACTOR NOTIFY THE ENGINEER OF THESE SITUATIONS AS SOON AS POSSIBLE, PRIOR TO EXPENDITURE OF FUNDS.
4. THE CONTRACTOR SHALL CONTACT ALL UTILITY COMPANIES AND COORDINATE RELOCATIONS PRIOR TO THE BEGINNING OF ANY CONSTRUCTION. THE CONTRACTOR SHALL BE RESPONSIBLE TO IDENTIFY AND REPORT THE EXACT LOCATION OF ALL EXISTING UTILITIES WITHIN THE CONSTRUCTION LIMITS, WHETHER THEY ARE IDENTIFIED ON THE DRAWINGS OR NOT.
5. EROSION AND SEDIMENT CONTROL BEST MANAGEMENT PRACTICES SHALL BE OBSERVED DURING CONSTRUCTION BY THE CONTRACTOR. THE METHODS WHICH SHOULD BE USED INCLUDE BUT ARE NOT LIMITED TO:
   A. THE CONTRACTOR SHALL BE RESPONSIBLE FOR ANY SILTATION CAUSED BY CONSTRUCTION ACTIVITY ENTERING THE STORM DRAINAGE SYSTEM, BOTH ON-SITE AND OFF-SITE. THE CONTRACTOR SHALL UTILIZE SAND BAGS AND SYNTHETIC BALES OR OTHER EROSION CONTROL METHODS TO CONTROL EROSION.
   B. THE CONTRACTOR SHALL BE RESPONSIBLE FOR THE CONTROL OF DUST AT ALL TIMES DURING CONSTRUCTION BY UTILIZING WATER TRUCKS, ANTI-DRAFT FENCING, OR OTHER APPROVED METHODS, AND BY COVERING OPEN BODIED TRUCKS TRANSPORTING DEBRIS.
   C. EROSION CONTROL MEASURES SHALL BE PROVIDED PER F.D.O.T. EROSION AND SEDIMENT CONTROL DESIGNER AND REVIEWER MANUAL AS APPLICABLE.
6. THE CONTRACTOR SHALL BE RESPONSIBLE FOR MAINTENANCE, INCLUDING MOWING AND CLEANUP UNTIL THE PROJECT IS ACCEPTED. IF, BY THEN, THE GROWTH IS NOT FIRMLY ESTABLISHED, THE CONTRACTOR WILL CONTINUE TO BE RESPONSIBLE FOR MAINTENANCE, UNTIL THE GROWTH IS ESTABLISHED.
7. THE CONTRACTOR SHALL USE EXTREME CARE NOT TO DAMAGE THE ROOT SYSTEMS OF TREES AND OTHER LANDSCAPE FEATURES WHICH ARE TO BE SAVED, AND/OR SALVAGED, FOR RESTORATION PURPOSES. NO EQUIPMENT, SUPPLIES, OR VEHICLES SHALL BE STORED WITHIN THE DRIP LINE OF TREES TO REMAIN AND BE PRESERVED. SEE SPECS FOR ADDITIONAL INFORMATION.
8. AS PART OF CLEARING AND GRUBBING, ALL DEBRIS IS TO BE REMOVED FROM THE PROJECT SITE AND SALVAGED BY THE CONTRACTOR OR TRANSPORTED TO A LEGAL DISPOSAL AREA. NO BURNING SHALL BE ALLOWED ON THE PROJECT SITE.
9. IT IS THE RESPONSIBILITY OF THE CONTRACTOR TO EXAMINE THE JOB SITE, REVIEW THE CONSTRUCTION AND DESIGN REQUIREMENTS, PROJECT PERMITS, CONDITIONS, STIPULATIONS, AND RESTRICTIONS AS NECESSARY TO FAMILIARIZE HIMSELF WITH THE ENTIRE PROJECT PRIOR TO BIDDING.
10. THE COUNTY SHALL SECURE AN INDEPENDENT TESTING LABORATORY DURING CONSTRUCTION TO PERFORM SUCH TESTING AS NEEDED TO CERTIFY THAT THE MATERIAL AND STRUCTURAL COMPONENT SPECIFICATIONS NOTED HAVE BEEN MET. THE CONTRACTOR SHALL ALSO SUBMIT, FOR REVIEW AND APPROVAL, TO THE ENGINEER OF RECORD, A MINIMUM OF FOUR COPIES OF SHOP DRAWINGS AND/OR MATERIAL CERTIFICATIONS FOR ALL MATERIALS PRIOR TO ORDERING SAME FOR THE PROJECT.
11. THE CONTRACTOR SHALL CLEAR THE SITE FROM THE EDGE OF ROAD TO THE RIGHT-OF-WAY LINE. DEBRIS SHALL BE PROPERLY DISPOSED OF BY THE CONTRACTOR, AT HIS EXPENSE.
12. ALL DISTURBED GRASSED AREAS SHALL BE GRADED FOR POSITIVE DRAINAGE AND STABILIZED BY SODDING.
13. ALL CONSTRUCTION SHALL COMPLY WITH ALL FEDERAL AND STATE A.D.A. (AMERICANS WITH DISABILITIES ACT) STANDARDS.
14. CLASS I CONCRETE, 3,000 PSI @ 28 DAYS SHALL BE USED FOR ALL SIDEWALKS AND CONCRETE STRUCTURES, SIDEWALKS TO RECEIVE FIBERMESH REINFORCING.
15. FILL MATERIAL, PLACED IN THE RIGHT OF WAY SHALL BE COMPACTED TO CHARLOTTE COUNTY RIGHT-OF-WAY RESTORATION POLICY AND THE APPLICABLE F.D.O.T. SPECIFICATIONS, 98% MODIFIED PROCTOR DENSITY IN SIX (6) INCH LIFTS MAXIMUM – UNLESS SPECIFICATIONS ALLOW OTHERWISE.
16. FILL MATERIAL UTILIZED SHALL BE TYPE A-3.
17. CONTRACTOR TO ADHERE TO THE GUIDELINES OF THE FLORIDA "TRENCH AND SAFETY ACT".
18. PLAN GRADES, ON GRASSED AREAS, INDICATE TOP OF SOD.
19. SEE SIGNING AND PAVEMENT MARKING PLANS FOR RELOCATION OF ALL SIGNS AFFECTED BY SIDEWALK DESIGNS.
20. MODIFICATION OF EXISTING UTILITIES SHALL CONFORM TO CHARLOTTE COUNTY UTILITIES DEPARTMENT (CCUD) STANDARDS AND SPECIFICATIONS.
21. REMOVAL OF PROTECTED TREE SPECIES SHALL REQUIRE A TREE REMOVAL PERMIT.
22. IT IS THE CONTRACTOR'S RESPONSIBILITY TO ALLOW HOMEOWNER'S OR COMMERCIAL PROPERTIES REASONABLE ACCESS TO THEIR PROPERTY AT ALL TIMES DURING CONSTRUCTION. THIS PROVISION SHALL BE INCIDENTAL TO THE COST OF THE PROJECT.
23. THE CONTRACTOR SHALL SAWCUT AND REMOVE EXISTING PAVEMENT OVERBUILD, BEYOND "TRUE" EDGE OF PAVEMENT, ON PAVED RETURNS, (RADII) AND SHALL EXTEND SIDEWALK TO CUT PAVEMENT EDGE.

GENERAL NOTES:

1. ELEVATIONS ARE REFERENCED TO NORTH AMERICAN VERTICAL DATUM (N.A.V.D.) OF 1988.
2. WRITTEN DIMENSIONS TO TAKE PRECEDENCE OVER SCALE.
3. CALL OUT FOR FDOT INDEX COMPONENTS SHALL BE CONSIDERED THE LATEST & GREATEST INDEX YEAR, UNLESS NOTED OTHERWISE.
4. THE LOCATION OF EXISTING UTILITIES, PAVEMENT, VEGETATION, AND MISCELLANEOUS IMPROVEMENTS ARE APPROXIMATE ONLY. THE EXACT LOCATIONS SHALL BE FIELD VERIFIED BY THE CONTRACTOR. CONTRACTOR IS RESPONSIBLE TO CONTACT ALL UTILITY COMPANIES TO COORDINATE WORK.
5. ANY PUBLIC LAND CORNER WITHIN THE LIMITS OF CONSTRUCTION IS TO BE PROTECTED. IF A CORNER MONUMENT IS IN DANGER OF BEING DESTROYED AND HAS NOT BEEN PROPERLY REFERENCED, THE CONTRACTOR SHOULD NOTIFY THE OWNER/ENGINEER WITHOUT DELAY. ANY DAMAGE WILL BE REPAIRED BY THE CONTRACTOR VIA A LICENSED FLORIDA SURVEYOR AT THE EXPENSE OF THE CONTRACTOR.
6. EXISTING FACILITIES SHALL BE RESTORED TO A CONDITION EQUIVALENT OR BETTER TO THAT WHICH EXISTED PRIOR TO COMMENCING CONSTRUCTION, AT NO ADDITIONAL COST TO OWNER.
7. ALL CONSTRUCTION SHALL BE IN ACCORDANCE WITH STATE OF FLORIDA, DEPARTMENT OF TRANSPORTATION, ROADWAY AND TRAFFIC DESIGN STANDARDS, (LATEST EDITION), CHARLOTTE COUNTY DEVELOPMENT STANDARDS AND SPECIFICATIONS AND CHARLOTTE COUNTY UTILITIES DEPARTMENT REQUIREMENTS.
8. THE CONTRACTOR IS REQUIRED TO ADJUST ALL VALVE BOXES, MANHOLE RIMS, GRATES, ETC. AS NECESSARY TO MATCH PROPOSED GRADES.
9. CONTRACTOR SHALL NOTIFY THE APPROPRIATE AGENCIES A MINIMUM OF 72 HOURS PRIOR TO ALL REQUIRED INSPECTIONS.
10. CONTRACTOR TO PROVIDE SILT FENCE, STAKED SYNTHETIC BALES, TURBIDITY BARRIERS AND OTHER APPROPRIATE MEASURES TO EFFECT THE FILTRATION OF SURFACE WATER FLOWS AND TO PROVIDE EROSION PROTECTION DURING CONSTRUCTION ACTIVITIES. PROTECTION IS TO BE MAINTAINED DURING THE CONSTRUCTION PERIOD UNTIL DISTURBED SOILS HAVE BEEN STABILIZED WITH GRASS OR SUITABLE EROSION PROTECTION TREATMENT. CONSTRUCTION AND STAGING AREAS WILL BE MAINTAINED IN A FASHION TO PREVENT EROSION OR TURBIDITY PROBLEMS. CONTRACTOR WILL MEET ALL LOCAL, STATE, AND FEDERAL WATER QUALITY REGULATIONS AND PERMIT REQUIREMENTS. ALL DISTURBED AREAS TO BE SODDED AS CONSTRUCTION IS COMPLETED.
11. EXISTING OFF-SITE DRAINAGE PATTERNS SHALL BE MAINTAINED DURING CONSTRUCTION.
12. CONTRACTOR SHALL RETAIN, ON THE WORK SITE, COPIES OF ANY PERMITS NECESSARY FOR CONSTRUCTION.
13. CONTRACTOR SHALL PROMPTLY REPORT ALL FIELD CHANGES TO THE ENGINEER.
14. CONTRACTOR SHALL CLEAR ALL EXCAVATION AND FILL AREAS; ACTUAL LIMITS OF CLEARING SHALL BE DETERMINED IN THE FIELD BY OWNER OR ENGINEER.
15. SITE GRADES MAY BE ADJUSTED IN FIELD BY ENGINEER.
16. THE LOCATIONS OF EXISTING UTILITIES AND STORM SEWERS SHOWN ON THIS PLAN HAVE BEEN TAKEN FROM RECORD DRAWINGS AND FIELD INFORMATION. IT IS THE CONTRACTOR'S RESPONSIBILITY TO DETERMINE THEIR EXACT LOCATION PRIOR TO CONSTRUCTION AND PROVIDE IN WRITING ANY DISCREPANCIES TO THE ENGINEER.
17. THE CONTRACTOR SHALL PREPARE AND PROVIDE AS-BUILT AND RECORD DRAWINGS IN COMPLIANCE TO ALL AGENCIES GOVERNING PERMITS, CERTIFICATION, AND TRANSFER TO OPERATIONS STANDARDS AND SPECIFICATIONS, AS REQUIRED BY TS-20 INCLUDING ALL SIGNED & SEALED PLANS AND ELECTRONIC COPIES, WHICH SHALL BE DELIVERED TO THE ENGINEER.
18. CONTRACTOR IS REQUIRED TO OBTAIN FROM THE ENGINEER AND OWNER WRITTEN APPROVAL FOR ANY DEVIATIONS FROM THE PLANS AND/OR SPECIFICATIONS. THE CONTRACTOR WILL BE RESPONSIBLE FOR ANY COST ASSOCIATED WITH OBTAINING APPROVAL FROM ANY PERMITTING AGENCY FOR PROPOSED DEVIATIONS AND WILL SUBMIT ELECTRONIC COPIES AS WELL AS SIGNED & SEALED HARD COPIES TO THE ENGINEER AND OWNER.
19. CONTRACTOR SHALL BE RESPONSIBLE FOR MAINTAINING TRAFFIC AND USAGE OF THE EXISTING STREETS ADJACENT TO THE PROJECT, ALL TRAFFIC MAINTENANCE CONTROL SHALL BE IN ACCORDANCE WITH THE FLORIDA MANUAL OF TRAFFIC CONTROL AND SAFE PRACTICES FOR STREET AND HIGHWAY CONSTRUCTION, MAINTENANCE, AND UTILITY OPERATIONS AND APPROVED BY CHARLOTTE COUNTY.
20. CONTRACTOR SHALL BE RESPONSIBLE FOR OBTAINING ANY REQUIRED CONSTRUCTION PERMITS INCLUDING BUT NOT LIMITED TO RIGHT OF WAY PERMITS AND TREE REMOVAL PERMITS.
21. ALL CONSTRUCTION DEBRIS AND OTHER WASTE MATERIAL SHALL BE DISPOSED OF OFF SITE IN ACCORDANCE WITH APPLICABLE REGULATION.

PAVING, GRADING AND DRAINAGE NOTES:

1. CONTRACTOR SHALL NOTIFY THE OWNER AND CONTACT ALL UTILITY COMPANIES FOR LOCATIONS OF EXISTING UTILITIES IN THE AREA 72 HOURS (MIN.) PRIOR TO COMMENCING CONSTRUCTION.
2. ANY LAND DISTURBED BY CONSTRUCTION SHALL BE SODDED, USE ARGENTINE BAHIA OR LIKE KIND AND CONFORM TO FDOT SECTION 981. SOD ALONG EDGES OF PAVEMENT OF ALL ROADS, SIDEWALKS AND/OR CURB SHALL BE ONE INCH (1") BELOW FINISHED PAVEMENT GRADE.

SIGNING AND PAVEMENT MARKING NOTES:

1. ALL SIGNING AND PAVEMENT MARKINGS SHALL BE INSTALLED IN ACCORDANCE WITH FDOT STANDARDS FOR ROAD AND BRIDGE CONSTRUCTION, FDOT ROADWAY AND TRAFFIC DESIGN STANDARDS, "THE MANUAL ON UNIFORM TRAFFIC CONTROL DEVICES," AND THE CURRENT CHARLOTTE COUNTY PUBLIC WORKS – ENGINEERING DIVISION.
2. MATCH EXISTING PAVEMENT MARKINGS AT EXISTING ROADS.
3. MAINTENANCE OF TRAFFIC SHALL BE IN ACCORDANCE WITH THE FDOT STANDARD PLANS FOR ROADWAY CONSTRUCTION (LATEST EDITION).
4. CONTRACTOR SHALL SET ROADWAY GROUND MOUNT SIGNS AT PROPER DEFLECTION ANGLE TO THE ROADWAY IN ACCORDANCE WITH FDOT INDEX NUMBER 700-101.
5. SEE FDOT INDEX NUMBERS 706-001 AND 711-001 FOR ADDITIONAL DETAILS.

FLORIDA DEPARTMENT OF TRANSPORTATION STANDARD DETAIL NOTES:

ALL REFERENCES TO FLORIDA DEPARTMENT OF TRANSPORTATION STANDARD INDEXES ARE FROM THE FLORIDA DEPARTMENT OF TRANSPORTATION (FDOT) STANDARD PLANS FOR ROADWAY CONSTRUCTION. THESE INDEXES WERE PREPARED BY OR AT THE DIRECTION OF FDOT AND WERE FURNISHED TO JOHNSON ENGINEERING, INC.

THE DESIGN STANDARDS REFERENCED WITHIN THIS PLAN SET HAVE BEEN INCORPORATED HEREIN VERBATIM AS SET FORTH WITHIN THE ABOVE REFERENCED FDOT DESIGN STANDARDS.

CHARLOTTE COUNTY UTILITIES DEPARTMENT

STANDARD DETAIL NOTES:

ALL REFERENCES TO CHARLOTTE COUNTY UTILITIES DEPARTMENT DESIGN COMPLIANCE STANDARDS, LATEST EDITION:
(https://www.charlottecountyfl.gov/departments/utilities/engineering/design-compliance.stml)

CONSTRUCTION NOTES:

1. THE WATER SYSTEM VALVES AND LOW PRESSURE SEWER SYSTEM VALVES SHALL BE MARKED BEFORE THE START OF CONSTRUCTION AND REMAIN ACCESSIBLE THROUGHOUT THE ENTIRE PROJECT.
2. THE VALVE BOXES SHALL BE ADJUSTED TO FINISHED GRADE AT THE END OF THE PROJECT, PER C.C.U.D. SPECIFICATIONS.
3. IF, DURING CONSTRUCTION, THE CONTRACTOR COMES ACROSS ANY BLOW OFFS ON THE WATER MAIN, CONTACT THE UTILITY SO THE BLOW OFF CAN BE REMOVED BEFORE THE SIDEWALK IS PLACED.
4. DUE CARE MUST BE TAKEN ALONG THE WATER MAIN DURING CONSTRUCTION.
5. WATER SERVICES AND SEWER SERVICES CROSS THE PATH OF THE SIDEWALK.

UTILITY NOTES:

1. CONTRACTOR SHALL COORDINATE WITH ALL PRIVATE UTILITIES FOR THE RELOCATION OF ANY/ALL UTILITY INFRASTRUCTURE.
2. THE LISTED UTILITY COMPANIES WERE NOTIFIED OF THE PROJECT DETAILS AT THE TIME OF DESIGN.
3. THE FOLLOWING IS A LIST (NOT ALL INCLUSIVE) OF PRIVATE UTILITIES AND THEIR CONTACT INFORMATION. IT IS THE RESPONSIBILITY OF THE CONTRACTOR TO VERIFY THE ACCURACY OF THIS INFORMATION (CONTACTS MAY HAVE CHANGED) AND IDENTIFY ANY OTHER UTILITY PROVIDER NOT LISTED PRIOR TO CONSTRUCTION:

Florida Power & Light
Scott Overbaugh
2425 Thompson St.
Fort Myers, FL 33901
239-332-9154 (Off.)
239-246-1021 (Cell)
Scott.Overbaugh@FPL.com

CenturyLink
Bryan J. Corrogan or Ken Lutz
4195 Kings Highway
Port Charlotte, FL 33980
941-637-5167 (Off.)
863-452-3185 (Off.)
Bryan.Corrigan@centurylink.com
Ken.Lutz@centurylink.com

Comcast
Joshua Davis
3490 Technology Drive
Venice, FL 34275
239-253-7642
Joshua_Davis4@comcast.com

TECO (Peoples Gas)
Ericka M. Augutis or Anthony Baublitz
5901 Enterprise Parkway
Fort Myers, FL 33905
941-342-4025
EMAugutis@tecoenergy.com
afbaublitz@tecoenergy.com

Amerigas
Chad Williams
1402 Market Circle
Port Charlotte, FL 33953
941-255-9900 (Off.)
Chad.Williams@amerigas.com

Charlotte County Utilities Department
Dean Campbell
East Port Environmental Campus
25550 Harbor View Road, Suite 1
Port Charlotte, FL 33980-2503
941-456-0041 (Cell)
Dean.Campbell@charlottecountyfl.gov

NOTICE TO ALL CONTRACTORS

IT'S THE LAW IN FLORIDA
2 BUSINESS DAYS BEFORE
YOU DIG
CALL SUNSHINE
1-800-432-4770

STATE, COUNTIES & CITIES ARE "NOT" PART OF THE ONE CALL SYSTEM. THEY MUST BE CALLED INDIVIDUALLY.

BEFORE YOU DIG
STOP
CALL SUNSHINE
1-800-432-4770
AVOID DAMAGE TO UNDERGROUND FACILITIES

JOHNSON ENGINEERING
JOHNSON ENGINEERING, INC.
17833 MURDOCK CIRCLE
PORT CHARLOTTE, FLORIDA 33948
PHONE (941) 625-9919
E.B. #642 & L.B. #642

CHRISTOPHER D. BEERS, PE
FL License No. 64594

CHARLOTTE COUNTY
BOARD OF COUNTY
COMMISSIONERS
CHARLOTTE COUNTY, FLORIDA

SOUTH GULF COVE
MSBU BRIDGES
INGRAHAM BOULEVARD &
PRESIDENT WATERWAY
(FDOT BRIDGE #014056)

REVISIONS

NO.	DESCRIPTION	DATE

DATE:	APRIL 27, 2023
PROJECT NO.	20214193
FILE NO.	29-41-21
SCALE:	AS NOTED

GENERAL NOTES, ABBREVIATIONS AND LEGENDS

SHEET NUMBER
C2

Aerial photography provided by FDOT, Office of Surveying and Mapping. Flight Dates: 12/15/19 to 2/28/20.

O:\2021\20214193\Engineering\Drawings\214193-Aerial.dwg (Ing-Pres) DEA Sep 19, 2023 - 11:32am

JOHNSON ENGINEERING

JOHNSON ENGINEERING, INC.
17833 MURDOCK CIRCLE
PORT CHARLOTTE, FLORIDA 33948
PHONE (941) 625-9919
E.B. #642 & L.B. #642

CHRISTOPHER D. BEERS, PE
FL License No. 64594

CHARLOTTE COUNTY
BOARD OF COUNTY
COMMISSIONERS
CHARLOTTE COUNTY, FLORIDA

SOUTH GULF COVE
MSBU BRIDGES
INGRAHAM BOULEVARD &
PRESIDENT WATERWAY
(FDOT BRIDGE #014056)

REVISIONS

NO.	DESCRIPTION	DATE

DATE:	APRIL 27, 2023
PROJECT NO.	20214193
FILE NO.	29-41-21
SCALE:	AS SHOWN

AERIAL MAP

SHEET NUMBER

C3

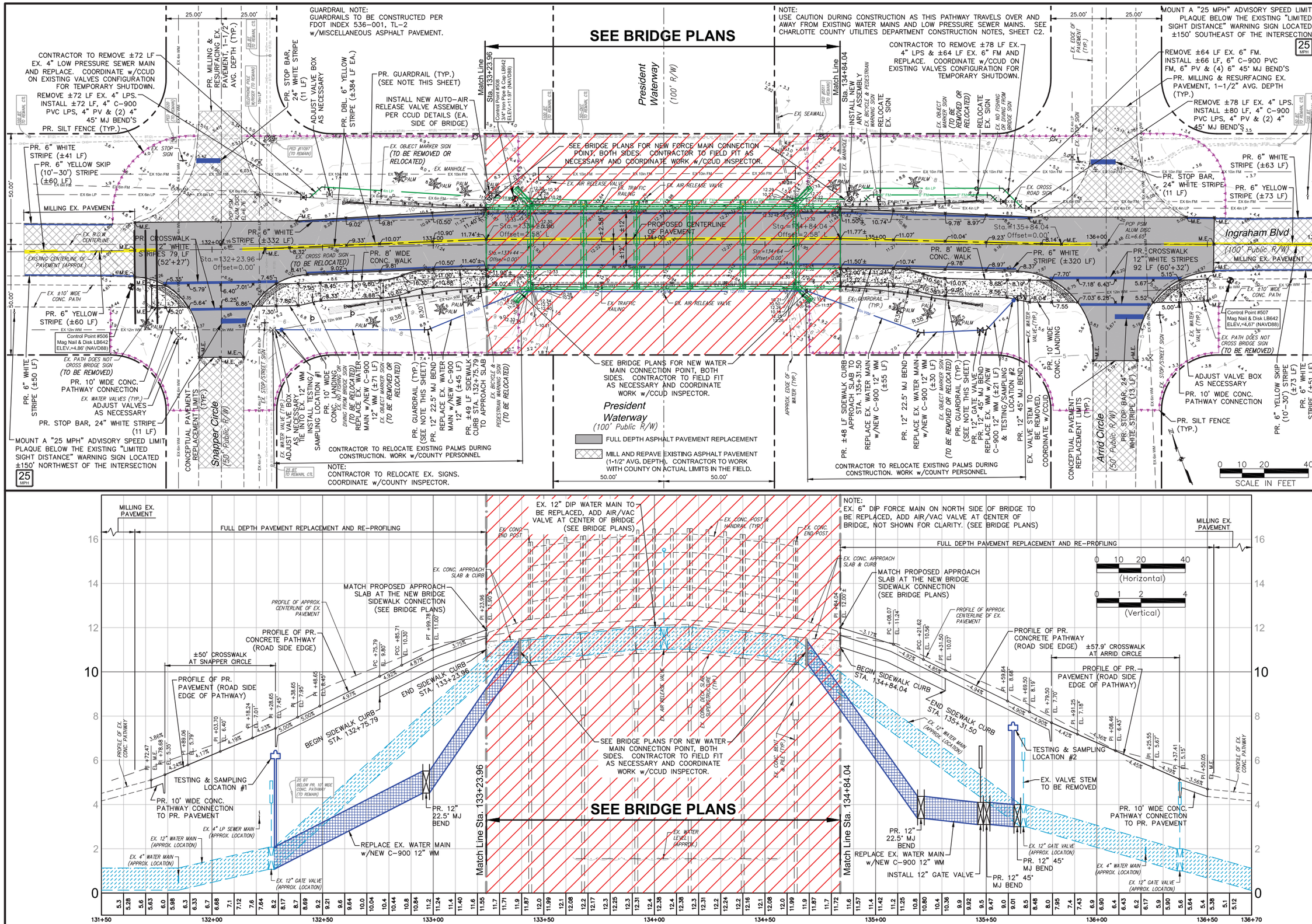

JOHNSON ENGINEERING

JOHNSON ENGINEERING, INC.
17833 MURDOCK CIRCLE
PORT CHARLOTTE, FLORIDA 33948
PHONE (941) 625-0919
E.B. #642 & L.B. #642

CHRISTOPHER D. BEERS, PE
FL License No. 64394

STATE OF FLORIDA PROFESSIONAL ENGINEER

CHARLOTTE COUNTY
BOARD OF COUNTY
COMMISSIONERS
CHARLOTTE COUNTY, FLORIDA

SOUTH GULF COVE
MSBU BRIDGES
INGRAHAM BOULEVARD &
PRESIDENT WATERWAY
(FDOT BRIDGE #014056)

REVISIONS

NO.	DESCRIPTION	DATE
1	Add 12" gate valve.	6/26/23
2	Revised milling areas, add speed limit signs.	9/19/23

DATE:	APRIL 27, 2023
PROJECT NO.	20214193
FILE NO.	29-41-21
SCALE:	AS SHOWN

PLAN AND PROFILE

SHEET NUMBER

C4

O:\2021\20214193\Engineering\Drawings\214193-IngPres-A01.dwg (PnP-IngPres) DFA Sep 19, 2023 - 3:30pm

GUARDRAIL NOTE:
GUARDRAILS TO BE CONSTRUCTED PER
FDOT INDEX 536-001, TL-2
w/MISCELLANEOUS ASPHALT PAVEMENT.

0 5 10 20
SCALE IN FEET (HOR)
0 2.5 5 10
SCALE IN FEET (VERT)

132+35.00
SL-3

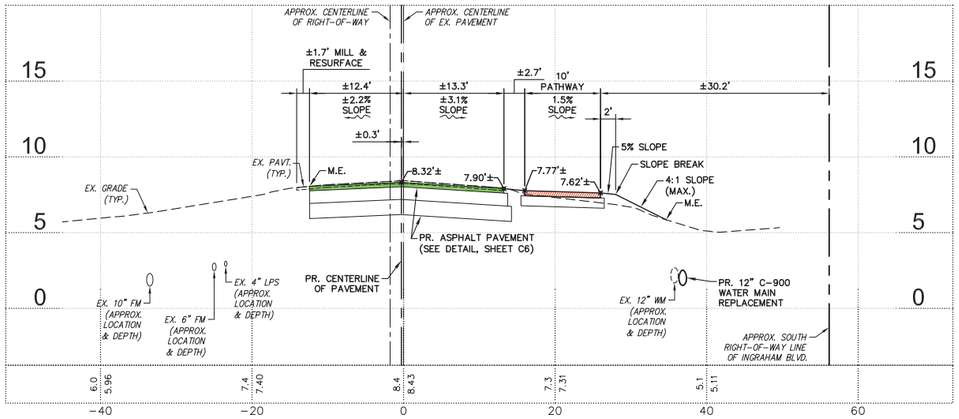

132+99.78
SL-6

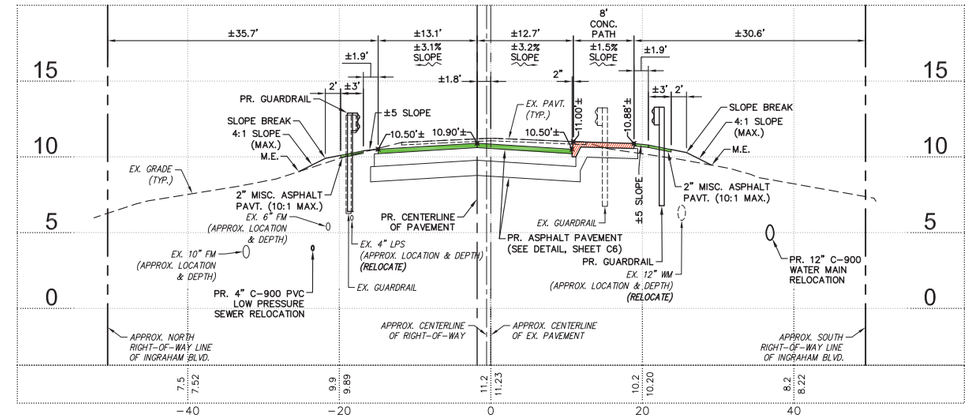

132+03.69
SL-2

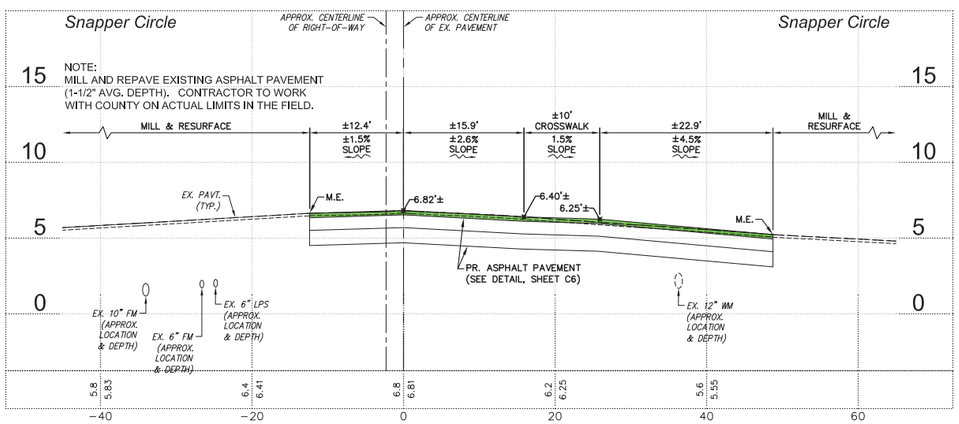

132+75.79
SL-5

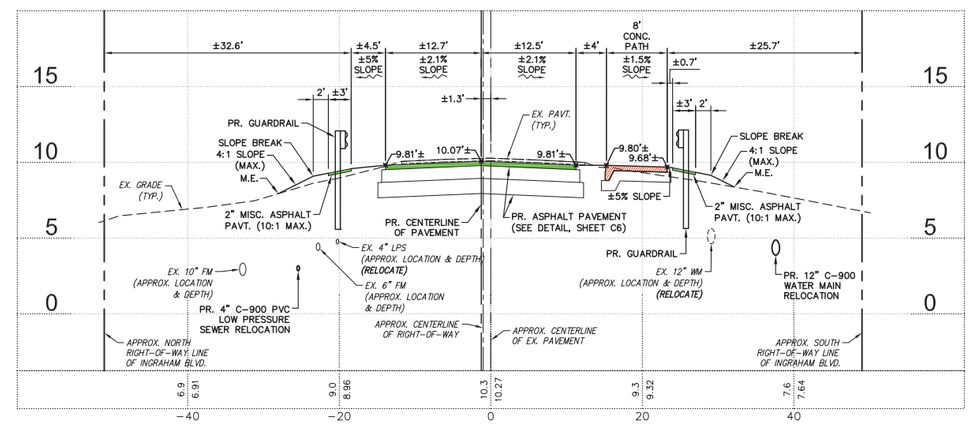

131+75.00
SL-1

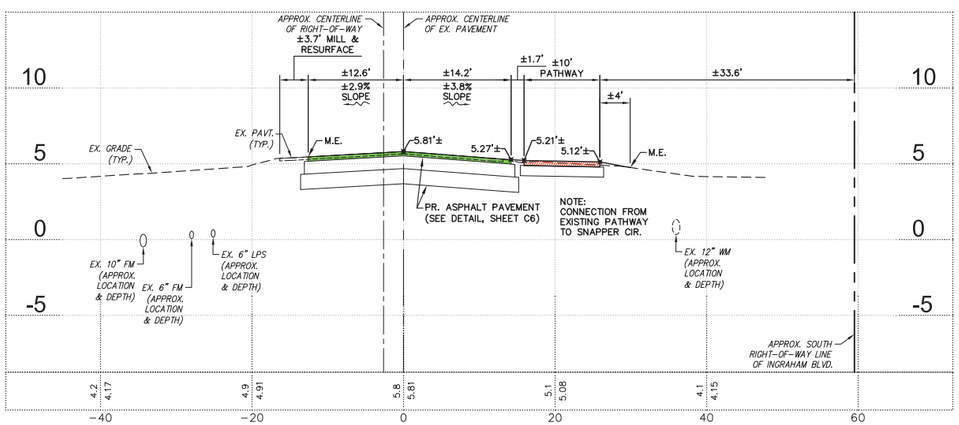

132+60.79
SL-4

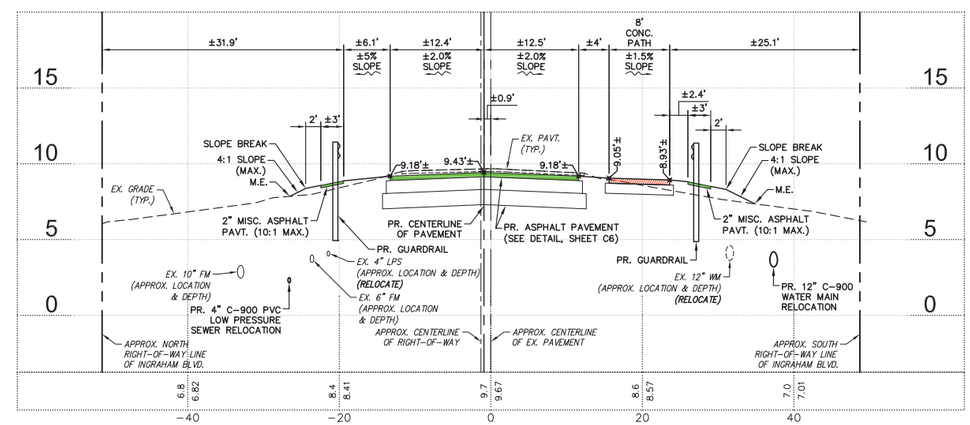

JOHNSON ENGINEERING
JOHNSON ENGINEERING, INC.
17833 MURDOCK CIRCLE
PORT CHARLOTTE, FLORIDA 33948
PHONE (941) 625-9919
E.B. #642 & L.B. #642

CHRISTOPHER D. BEERS, PE
FL License No. 64594

CHARLOTTE COUNTY
BOARD OF COUNTY
COMMISSIONERS
CHARLOTTE COUNTY, FLORIDA

SOUTH GULF COVE
MSBU BRIDGES
INGRAHAM BOULEVARD &
PRESIDENT WATERWAY
(FDOT BRIDGE #014056)

REVISIONS

NO.	DESCRIPTION	DATE
1	Revised section SL-2, milling areas.	9/19/23

DATE:	APRIL 27, 2023
PROJECT NO.	20214193
FILE NO.	29-42-21
SCALE:	AS SHOWN

EXISTING AND
PROPOSED
CROSS SECTIONS

SHEET NUMBER
C5.1

G:\2021\20214193\Engineering\Drawings\214193-IngPres-Sec.dwg (IP-C5.1) DFA Sep 19, 2023 - 1:39pm

GUARDRAIL NOTE:
GUARDRAILS TO BE CONSTRUCTED PER
FDOT INDEX 536-001, TL-2
w/MISCELLANEOUS ASPHALT PAVEMENT.

0 5 10 20
SCALE IN FEET (HOR)
0 2.5 5 10
SCALE IN FEET (VERT)

135+50.00
SL-9

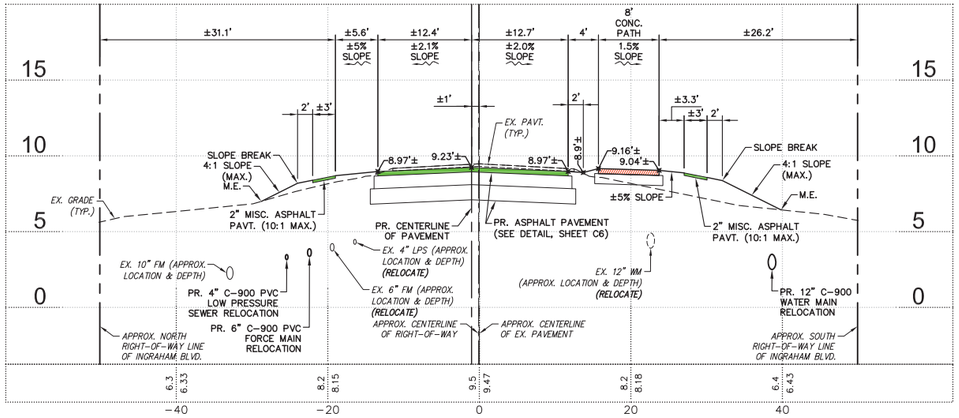

136+45.00
SL-12

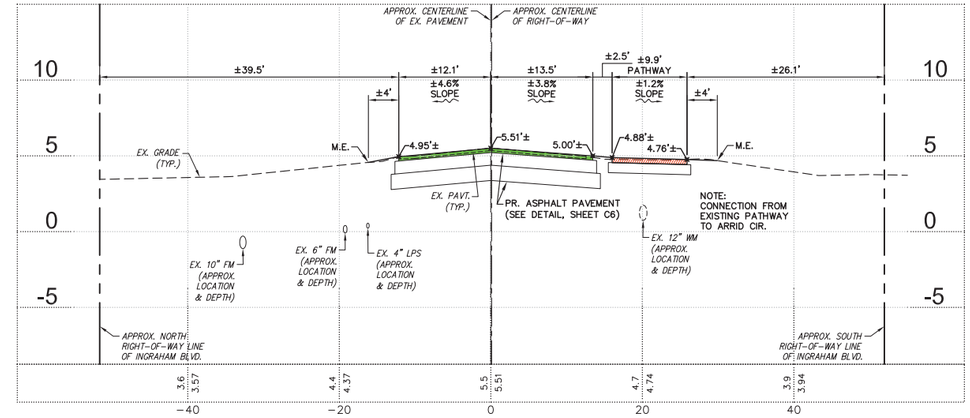

135+31.45
SL-8

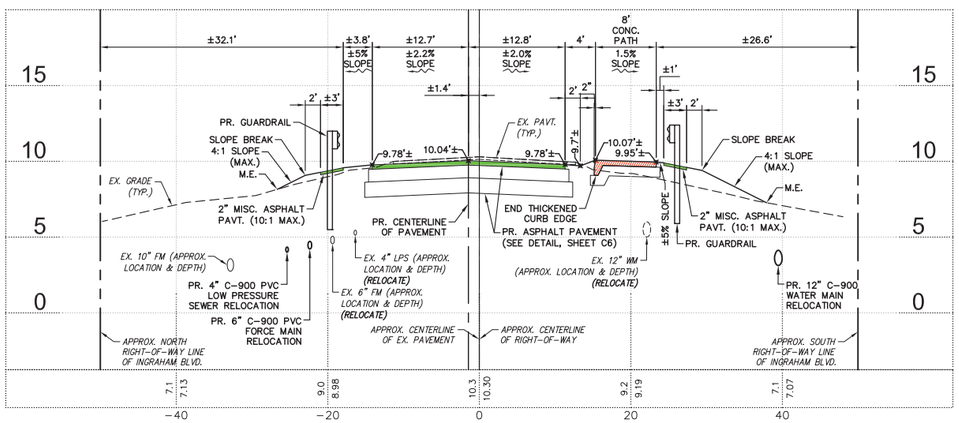

136+08.44
SL-11

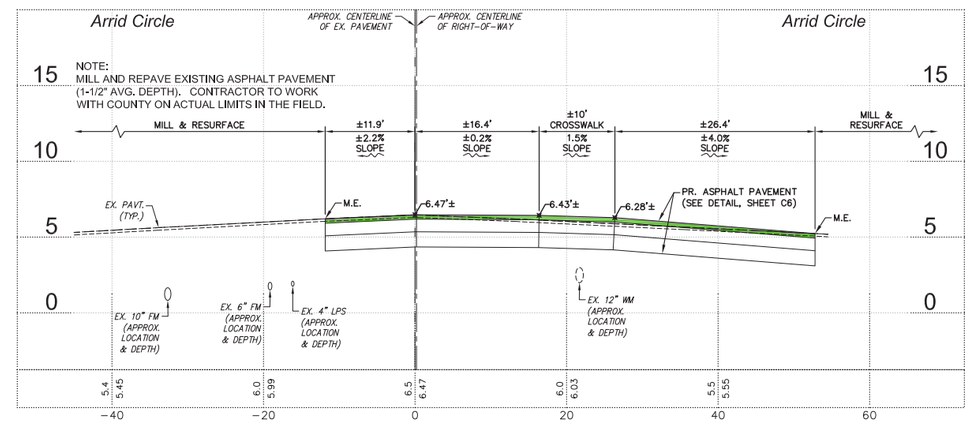

135+08.07
SL-7

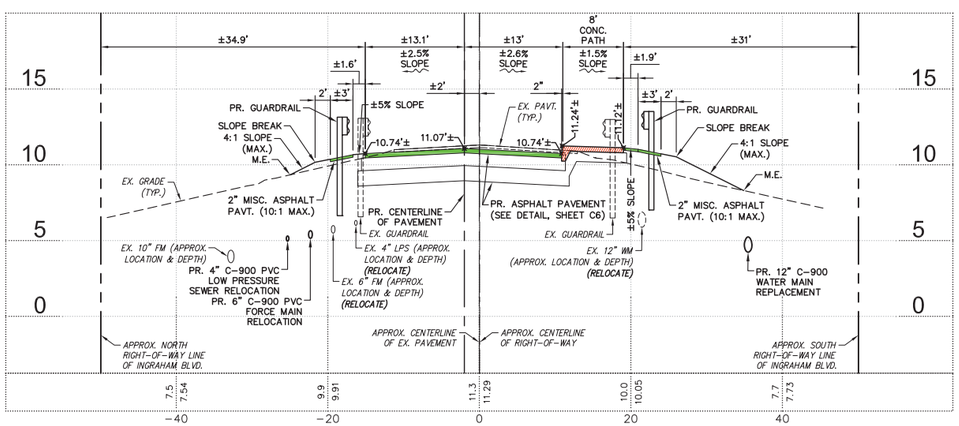

135+75.00
SL-10

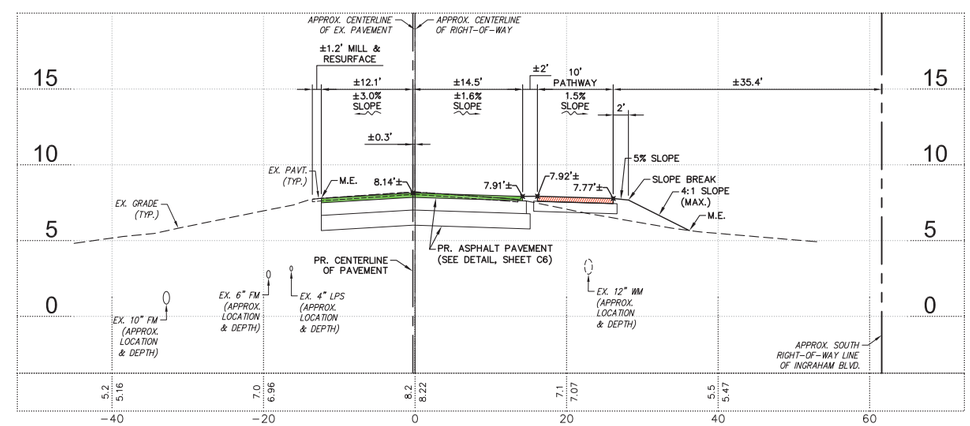

JOHNSON ENGINEERING
JOHNSON ENGINEERING, INC.
17833 MURDOCK CIRCLE
PORT CHARLOTTE, FLORIDA 33948
PHONE (941) 625-9919
E.B. #642 & L.B. #642

CHRISTOPHER D. BEERS, PE
FL License No. 64594

CHARLOTTE COUNTY
BOARD OF COUNTY
COMMISSIONERS
CHARLOTTE COUNTY, FLORIDA

SOUTH GULF COVE
MSBU BRIDGES
INGRAHAM BOULEVARD &
PRESIDENT WATERWAY
(FDOT BRIDGE #014056)

REVISIONS

NO.	DESCRIPTION	DATE
1	Revised section SL-11, milling area.	9/19/23

DATE:	APRIL 27, 2023
PROJECT NO.	20214193
FILE NO.	29-42-21
SCALE:	AS SHOWN

EXISTING AND
PROPOSED
CROSS SECTIONS

SHEET NUMBER
C5.2

NOTES:

1. 4" THICK CONCRETE PATHWAY (3000 P.S.I.) WITH FIBER MESH REINFORCEMENT, CONTRACTION JOINTS 10' O.C. AND EXPANSION JOINTS 40' O.C. FOR 10' WIDE PATHWAY AND CONTRACTION JOINTS 8' O.C. AND EXPANSION JOINTS 40' O.C. FOR 8' WIDE PATHWAY AS APPROVED BY THE CHARLOTTE COUNTY PUBLIC WORKS ENGINEERING DEPARTMENT WITH 8" TYPE "B" STABILIZED SUBGRADE (LBR 70) COMPACTED TO A MINIMUM OF 98% MODIFIED PROCTOR EXTENDING 6" BEYOND EDGE ON EACH SIDE.

2. THE CONTRACTOR SHALL CLEAR THE SITE FROM THE EDGE OF PAVEMENT TO THE RIGHT-OF-WAY LINE TO CONSTRUCT THE REQUIRED IMPROVEMENTS. DEBRIS SHALL BE PROPERLY REMOVED AND DISPOSED OF BY THE CONTRACTOR, AND AT HIS EXPENSE. (NO BURNING IS ALLOWED ON THIS PROJECT).
   CLEARING LIMITS FOR EXOTIC PLANT/TREE SPECIES REMOVAL OR TRIMMING VARIES. REMOVE PLANT/ TREE SPECIES IF ROOT SYSTEM IS WITHIN COUNTY RIGHT-OF-WAY OTHERWISE TRIM. REMOVAL/TRIMMING IS INCIDENTAL TO COST OF PROJECT (NO SEPARATE PAY ITEM).

3. PRIOR TO SODDING, CONTRACTOR SHALL LOWER GRADE 0.1' ALONG SIDEWALK AND EXISTING ROAD EDGE OF PAVEMENT TO PREVENT BLOCKING OF DRAINAGE.

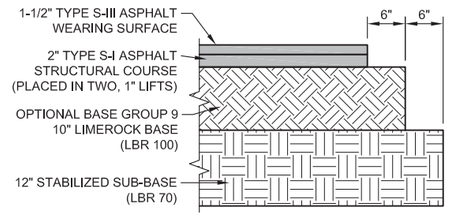

TYPICAL ASPHALT PAVEMENT SECTION
(NOT TO SCALE)

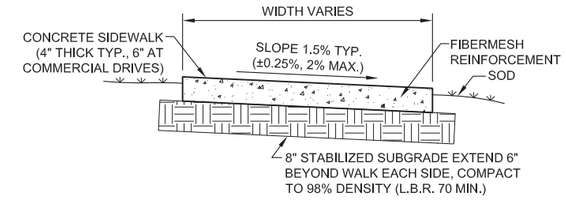

NOTE
1. CONCRETE TO BE FDOT CLASS I, 3,000 P.S.I. MINIMUM, WITH FIBERMESH REINFORCEMENT AND HAVE EXPANSION AND CONTRACTION JOINTS PER SPECIFICATIONS.
2. INSPECTION IS REQUIRED ONCE THE SIDEWALK IS FORMED.

TYPICAL SIDEWALK
NOT TO SCALE

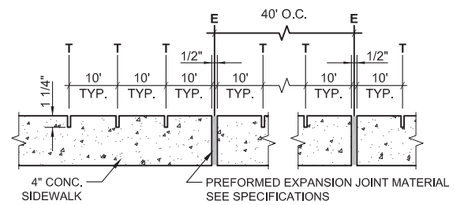

LONGITUDINAL SECTION LOCATION OF SIDEWALK JOINTS

LEGEND:
T = TOOLED JOINT
E = EXPANSION JOINT W/ ZIP STRIP & SIKAFLEX SEALANT

10' WIDE PATHWAY EXPANSION & TOOLED JOINTS DETAIL
NOT TO SCALE

NOTE:
DETECTABLE WARNING TRUNCATED DOME A.D.A. MATS SHALL BE OFFSET 12 INCHES FROM EDGE OF PAVEMENT ON ALL NON-CURBED RADII.

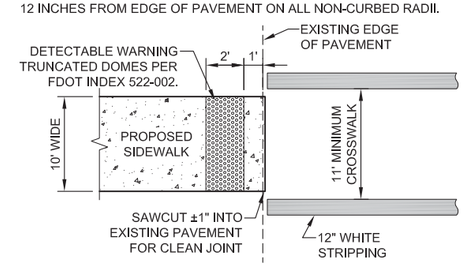

SIDEWALK PEDESTRIAN CROSSING DETAIL
NOT TO SCALE

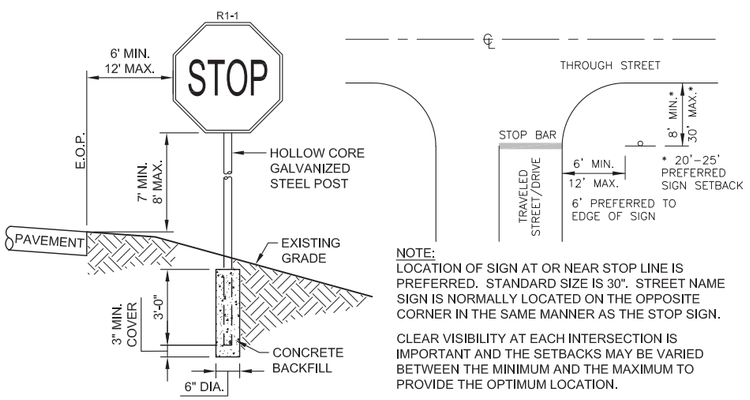

NOTE:
LOCATION OF SIGN AT OR NEAR STOP LINE IS PREFERRED. STANDARD SIZE IS 30". STREET NAME SIGN IS NORMALLY LOCATED ON THE OPPOSITE CORNER IN THE SAME MANNER AS THE STOP SIGN.

CLEAR VISIBILITY AT EACH INTERSECTION IS IMPORTANT AND THE SETBACKS MAY BE VARIED BETWEEN THE MINIMUM AND THE MAXIMUM TO PROVIDE THE OPTIMUM LOCATION.

TYPICAL STOP SIGN INSTALLATION DETAIL
NOT TO SCALE

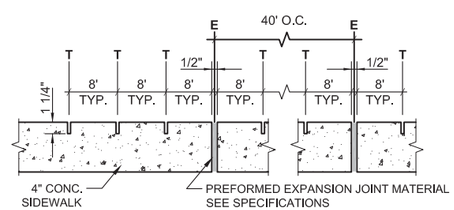

LONGITUDINAL SECTION LOCATION OF SIDEWALK JOINTS

LEGEND:
T = TOOLED JOINT
E = EXPANSION JOINT W/ ZIP STRIP & SIKAFLEX SEALANT

8' WIDE PATHWAY EXPANSION & TOOLED JOINTS DETAIL
NOT TO SCALE

SAWCUT 1" INTO EXISTING PAVEMENT. PROVIDE CLEAN, STRAIGHT EDGE ON EXISTING PAVEMENT.

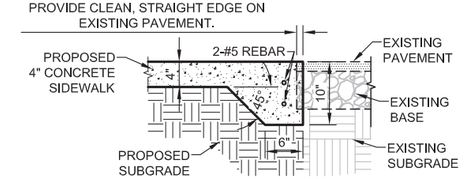

SIDEWALK CONNECTION TO EXISTING PAVEMENT DETAIL
NOT TO SCALE

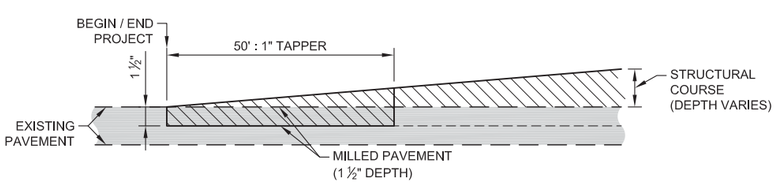

PAVEMENT FEATHERING DETAIL
(NOT TO SCALE)

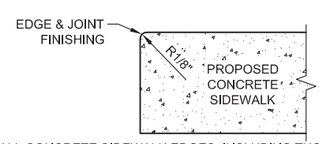

ALL CONCRETE SIDEWALK EDGES, INCLUDING THOSE AT FORMED JOINTS, SHALL BE FINISHED WITH AN EDGER HAVING A RADIUS OF 3 mm (1/8 INCH). TRAVERSE JOINT SHALL BE EDGED BEFORE BROOMING, AND THE BROOMING SHALL ELIMINATE THE FLAT SURFACE LEFT BY THE SURFACE FACE OF THE EDGER. CORNERS AND EDGES WHICH HAVE CRUMBLED AND AREAS WHICH LACK SUFFICIENT MORTAR FOR PROPER FINISHING SHALL BE CLEANED AND FILLED SOLIDLY WITH A PROPERLY PROPORTIONED MORTAR MIIXTURE AND THEN FINISHED.

FINISHING EDGE OF CONCRETE SIDEWALK DETAIL
NOT TO SCALE

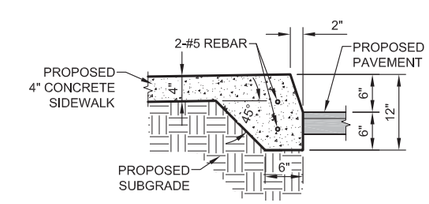

SIDEWALK CURB DETAIL
NOT TO SCALE

O:\2021\20214193\Engineering\Drawings\214193-IngPres-D01.dwg (Typ Details) DEA Sep 19, 2023 – 11:51am

JOHNSON ENGINEERING
JOHNSON ENGINEERING, INC.
17833 MURDOCK CIRCLE
PORT CHARLOTTE, FLORIDA 33948
PHONE (941) 625-9919
E.B. #642 & L.B. #642
CHRISTOPHER D. BEERS, PE
FL License No. 64594

CHARLOTTE COUNTY
BOARD OF COUNTY COMMISSIONERS
CHARLOTTE COUNTY, FLORIDA

SOUTH GULF COVE
MSBU BRIDGES
INGRAHAM BOULEVARD & PRESIDENT WATERWAY
(FDOT BRIDGE #014056)

REVISIONS

NO.	DESCRIPTION	DATE
1	Add Pavement Feathering Detail.	9/19/23

DATE:	APRIL 27, 2023
PROJECT NO.	20214193
FILE NO.	29-41-21
SCALE:	As noted.

TYPICAL DETAILS AND SECTIONS

SHEET NUMBER
C6

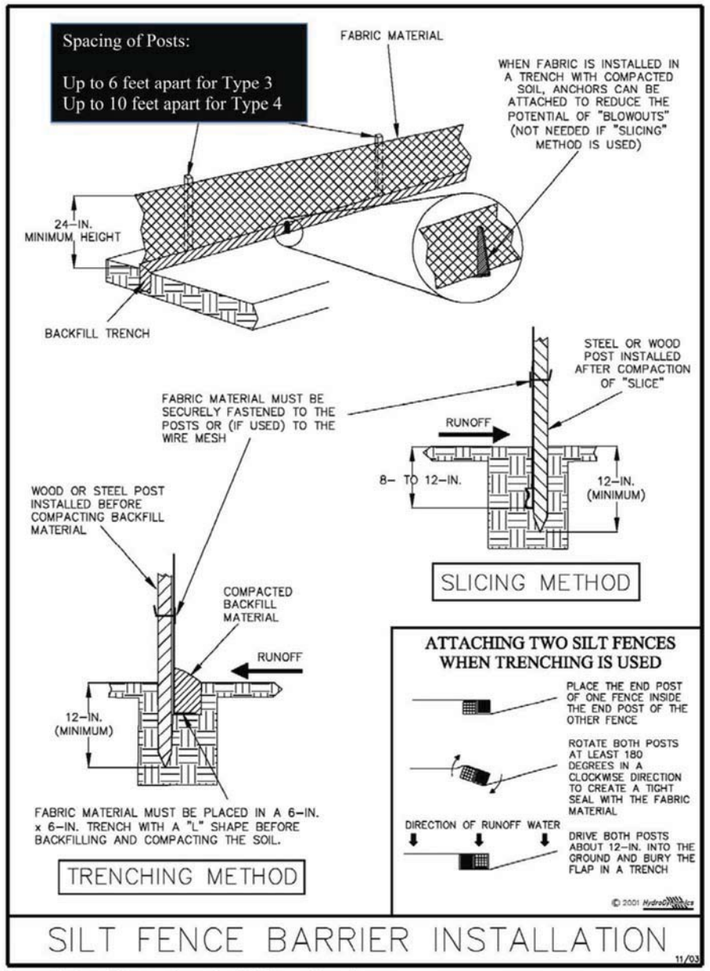

Figure V-2: Illustration of a Silt Fence Barrier

Permission is given by HydroDynamics Incorporated to copy and reproduce this detail

STATE OF FLORIDA E&SC DESIGNER & REVIEWER MANUAL; LATEST EDITION: JULY 2013

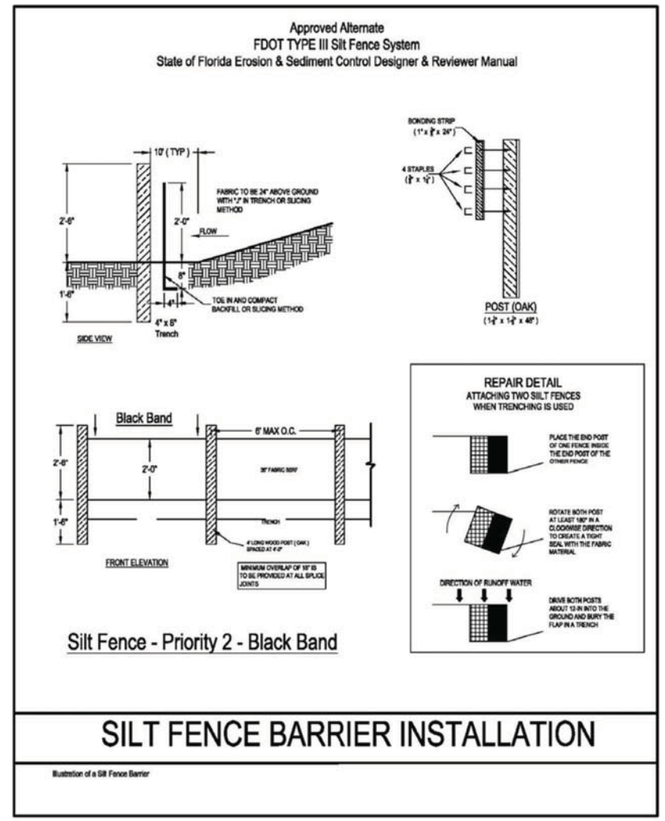

Figure V-3: Illustration of Silt Fence Priority 2 – Black Band

STATE OF FLORIDA E&SC DESIGNER & REVIEWER MANUAL; LATEST EDITION: JULY 2013

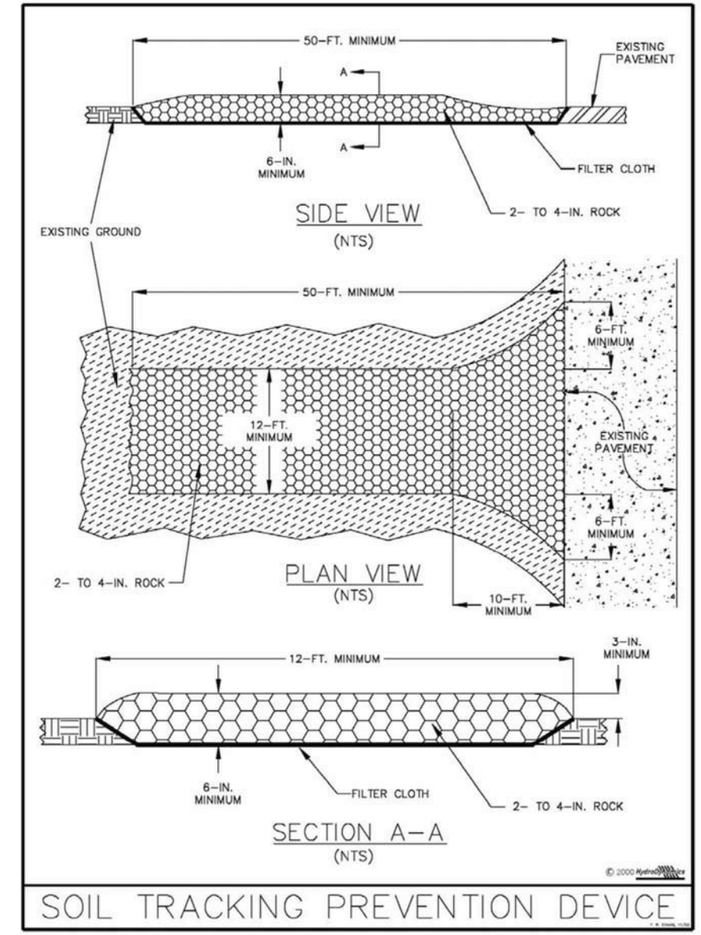

Figure V-19: Illustration of a Soil Tracking Prevention Device

Permission is given by HydroDynamics Incorporated to copy and reproduce this detail

BEST MANAGEMENT PRACTICES

1. INSTALL SILT FENCE AND ALL EROSION CONTROL MEASURES PRIOR TO THE COMMENCEMENT OF CONSTRUCTION OR IMMEDIATELY AFTER INITIAL CLEARING ACTIVITIES.
2. STABILIZE ALL DISTURBED AREAS AS EARLY IN THE CONSTRUCTION PROCESS AS POSSIBLE.
3. ADDITIONAL TEMPORARY EROSION/SEDIMENT CONTROLS (NOT SHOWN ON THE CONSTRUCTION PLAN) THAT ARE NECESSARY TO MAINTAIN COMPLIANCE WITH STATE FLORIDA WATER QUALITY STANDARDS, AS AMENDED, SHALL BE DESIGNED, SPECIFIED, LOCATED AND INSTALLED IN THE FIELD UNDER THE SUPERVISION OF THE ENGINEER/CONTRACTOR OR DESIGNATED REPRESENTATIVE.
4. TURBIDITY BARRIERS FOR FLOWING STREAMS AND TIDAL CREEKS MAY BE EITHER FLOATING, OR STAKED TYPES OR ANY COMBINATIONS OF TYPES THAT WILL SUIT SITE CONDITIONS AND MEET EROSION CONTROL AND WATER QUALITY REQUIREMENTS. THE BARRIERS TYPE(S) WILL BE AT THE CONTRACTORS OPTION UNLESS OTHERWISE SPECIFIED IN THE PLANS.
5. DO NOT PLACE SILT FENCE IN MANNER THAT THE SILT FENCE WILL ACT AS DAM ACROSS PERMANENT FLOWING WATERCOURSES, SILT FENCES ARE TO BE USED AT UPLAND LOCATIONS AND TURBIDITY BARRIERS USED AT PERMANENT BODIES OF WATER.
6. TURBID OFFSITE DISCHARGE (I.E. IN EXCESS OF 29 NTUS ABOVE BACKGROUND LEVEL.) SHALL BE REPORTED WITHIN 24 HOURS TO THE ENGINEER OF RECORD. CORRECTIVE ACTION TAKEN TO REMEDIATE THE DISCHARGE SHOULD BE INCLUDED AS PART OF THE NOTIFICATION. A SITE SPECIFIC TURBIDITY MONITORING PLAN MAY BE REQUIRED FOR PERSISTENT PROBLEM AREAS.
7. FUEL OR OTHER PETROLEUM PRODUCT SPILLS IN EXCESS OF 25 GALLONS THAT MAY OCCUR DUE TO OPERATION AND MAINTENANCE OF HEAVY EQUIPMENT DURING CONSTRUCTION SHALL BE CONTAINED/CLEANED UP AND IMMEDIATELY REPORTED TO THE ENGINEER OF RECORD. SMALLER GROUND SURFACE SPILLS SHALL BE CLEANED UP BY THE CONTRACTOR AS SOON AS PRACTICAL.

THIS DRAWING CONTAINS DETAILS DESIGNED BY, STANDARD TO, AND FURNISHED BY
FLORIDA DEPARTMENT OF TRANSPORTATION
SAID DETAILS WERE NOT DESIGNED BY JOHNSON ENGINEERING.

SEE THE FLORIDA DEPARTMENT OF TRANSPORTATION WEBSITE FOR FURTHER INFORMATION. DETAILS AND THE STATE OF FLORIDA EROSION AND SEDIMENT CONTROL DESIGNER & REVIEWER MANUAL.

O:\2021\20214193\Engineering\Drawings\214193-IngPres-D01.dwg (EC Details) DEA Sep 19, 2023 - 11:52am

JOHNSON ENGINEERING
JOHNSON ENGINEERING, INC.
17833 MURDOCK CIRCLE
PORT CHARLOTTE, FLORIDA 33948
PHONE (941) 625-9919
E.B. #642 & L.B. #642
CHRISTOPHER D. BEERS, PE
FL License No. 64594
STATE OF FLORIDA

CHARLOTTE COUNTY
BOARD OF COUNTY
COMMISSIONERS
CHARLOTTE COUNTY, FLORIDA

SOUTH GULF COVE
MSBU BRIDGES
INGRAHAM BOULEVARD &
PRESIDENT WATERWAY
(FDOT BRIDGE #014056)

REVISIONS

NO.	DESCRIPTION	DATE

DATE:	APRIL 27, 2023
PROJECT NO.	20214193
FILE NO.	29-41-21
SCALE:	As noted.

EROSION CONTROL DETAILS

SHEET NUMBER
C7

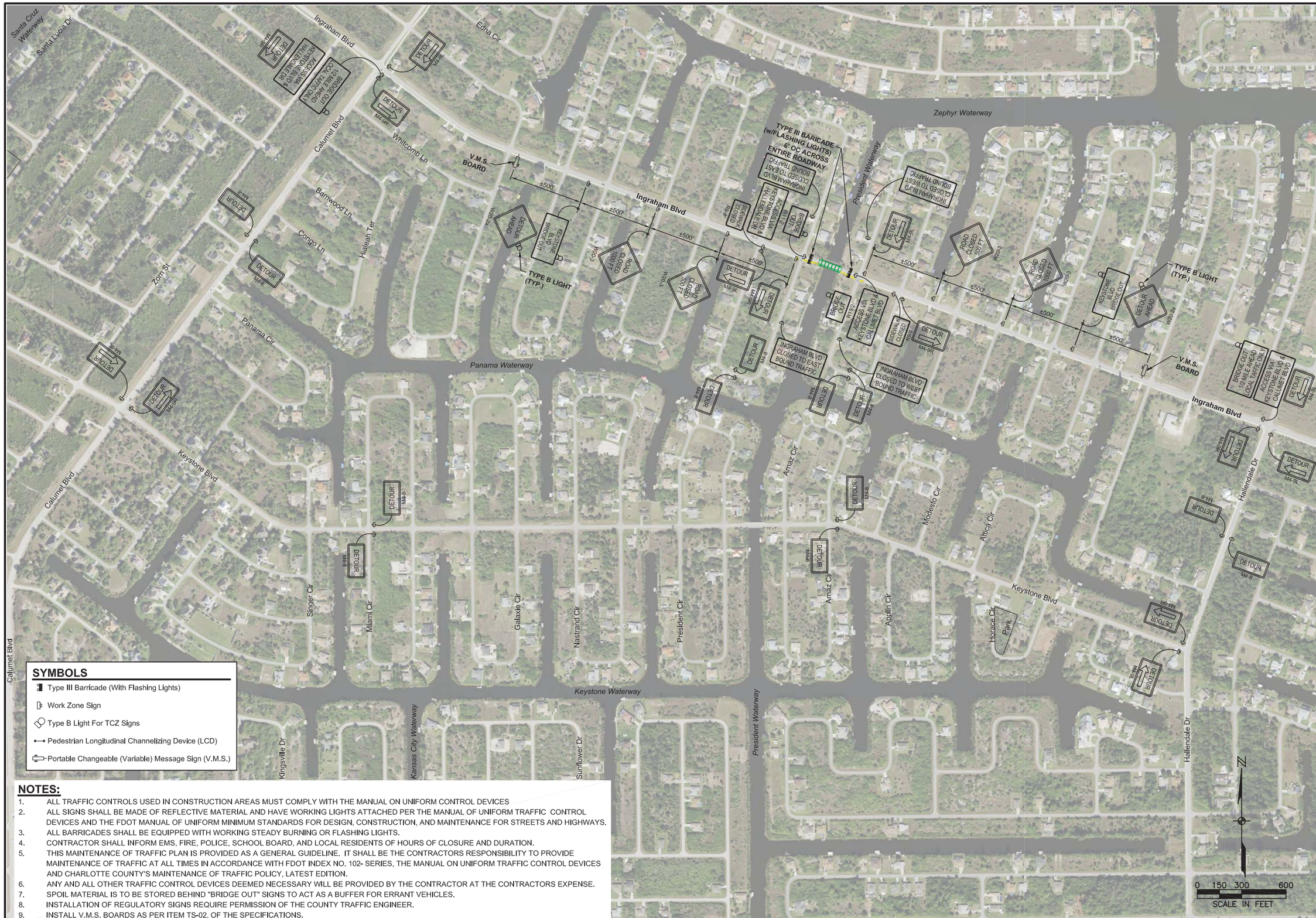

SYMBOLS

- Type III Barricade (With Flashing Lights)
- Work Zone Sign
- Type B Light For TCZ Signs
- Pedestrian Longitudinal Channelizing Device (LCD)
- Portable Changeable (Variable) Message Sign (V.M.S.)

NOTES:

1. ALL TRAFFIC CONTROLS USED IN CONSTRUCTION AREAS MUST COMPLY WITH THE MANUAL ON UNIFORM CONTROL DEVICES
2. ALL SIGNS SHALL BE MADE OF REFLECTIVE MATERIAL AND HAVE WORKING LIGHTS ATTACHED PER THE MANUAL OF UNIFORM TRAFFIC CONTROL DEVICES AND THE FDOT MANUAL OF UNIFORM MINIMUM STANDARDS FOR DESIGN, CONSTRUCTION, AND MAINTENANCE FOR STREETS AND HIGHWAYS.
3. ALL BARRICADES SHALL BE EQUIPPED WITH WORKING STEADY BURNING OR FLASHING LIGHTS.
4. CONTRACTOR SHALL INFORM EMS, FIRE, POLICE, SCHOOL BOARD, AND LOCAL RESIDENTS OF HOURS OF CLOSURE AND DURATION.
5. THIS MAINTENANCE OF TRAFFIC PLAN IS PROVIDED AS A GENERAL GUIDELINE. IT SHALL BE THE CONTRACTORS RESPONSIBILITY TO PROVIDE MAINTENANCE OF TRAFFIC AT ALL TIMES IN ACCORDANCE WITH FDOT INDEX NO. 102- SERIES, THE MANUAL ON UNIFORM TRAFFIC CONTROL DEVICES AND CHARLOTTE COUNTY'S MAINTENANCE OF TRAFFIC POLICY, LATEST EDITION.
6. ANY AND ALL OTHER TRAFFIC CONTROL DEVICES DEEMED NECESSARY WILL BE PROVIDED BY THE CONTRACTOR AT THE CONTRACTORS EXPENSE.
7. SPOIL MATERIAL IS TO BE STORED BEHIND "BRIDGE OUT" SIGNS TO ACT AS A BUFFER FOR ERRANT VEHICLES.
8. INSTALLATION OF REGULATORY SIGNS REQUIRE PERMISSION OF THE COUNTY TRAFFIC ENGINEER.
9. INSTALL V.M.S. BOARDS AS PER ITEM TS-02, OF THE SPECIFICATIONS.

Aerial photography provided by FDOT, Office of Surveying and Mapping. Flight Dates: 12/15/19 to 2/28/20.

G:\2021\20214193\Engineering\Drawings\214193-IngPres-MOT.dwg (Ing-Pres-MOT1) DFA Sep 19, 2023 - 11:54am

JOHNSON ENGINEERING

JOHNSON ENGINEERING, INC.
17833 MURDOCK CIRCLE
PORT CHARLOTTE, FLORIDA 33948
PHONE (941) 625-9919
E.B. #642 & L.B. #642

CHRISTOPHER D. BEERS, PE
FL License No. 64594

CHARLOTTE COUNTY
BOARD OF COUNTY
COMMISSIONERS
CHARLOTTE COUNTY, FLORIDA

SOUTH GULF COVE
MSBU BRIDGES
INGRAHAM BOULEVARD &
PRESIDENT WATERWAY
(FDOT BRIDGE #014056)

REVISIONS

NO.	DESCRIPTION	DATE

DATE:	APRIL 27, 2023
PROJECT NO.	20214193
FILE NO.	29-41-21
SCALE:	AS SHOWN

CONCEPTUAL
MAINTENANCE OF
TRAFFIC PLAN

SHEET NUMBER

C8.1

MAINTENANCE OF TRAFFIC PLAN

SYMBOLS

- Type III Barricade (With Flashing Lights)
- Work Zone Sign
- Type B Light For TCZ Signs
- Pedestrian Longitudinal Channelizing Device (LCD)
- Portable Changeable (Variable) Message Sign (V.M.S.)

Aerial photography provided by FDOT, Office of Surveying and Mapping. Flight Dates: 12/15/19 to 2/28/20.

JOHNSON ENGINEERING

JOHNSON ENGINEERING, INC.
17833 MURDOCK CIRCLE
PORT CHARLOTTE, FLORIDA 33948
PHONE (941) 625-9919
E.B. #642 & L.B. #642

CHRISTOPHER D. BEERS, PE
FL License No. 64594

CHARLOTTE COUNTY
BOARD OF COUNTY
COMMISSIONERS
CHARLOTTE COUNTY, FLORIDA

SOUTH GULF COVE
MSBU BRIDGES
INGRAHAM BOULEVARD &
PRESIDENT WATERWAY
(FDOT BRIDGE #014056)

REVISIONS

NO.	DESCRIPTION	DATE

DATE:	APRIL 27, 2023
PROJECT NO.	20214193
FILE NO.	29-41-21
SCALE:	AS SHOWN

CONCEPTUAL
MAINTENANCE OF
TRAFFIC PLAN

SHEET NUMBER

C8.2

INGRAHAM BLVD. OVER PRESIDENT WATERWAY (FDOT BRIDGE NO. 014056)

CHARLOTTE COUNTY, FL

INDEX OF STRUCTURE PLANS

SHEET NO.	SHEET DESCRIPTION
B-1	KEY SHEET
B-2	SIGNATURE SHEET
B-3	GENERAL NOTES (1 OF 2)
B-4	GENERAL NOTES (2 OF 2)
B-5	SUMMARY OF QUANTITIES
B-6	STANDARD CONCRETE SPALL REPAIR DETAILS
B-7	PLAN & ELEVATION
B-8	REMOVAL OF EXISTING STRUCTURE (1 OF 2)
B-9	REMOVAL OF EXISTING STRUCTURE (2 OF 2)
B-10	END BENTS 1 & 6
B-11	TYPICAL SECTION (1 OF 2)
B-12	TYPICAL SECTION (2 OF 2)
B-13	SUPERSTRUCTURE DETAILS
B-14	SUPERSTRUCTURE REPAIR DETAILS
B-15	CAST-IN-PLACE CONCRETE BEAMS
B-16	SUBSTRUCTURE DETAILS
B-17	APPROACH SLAB DETAILS (1 OF 2)
B-18	APPROACH SLAB DETAILS (2 OF 2)
B-19	UTILITY SUPPORT DETAILS

FINAL PLANS FOR CONSTRUCTION

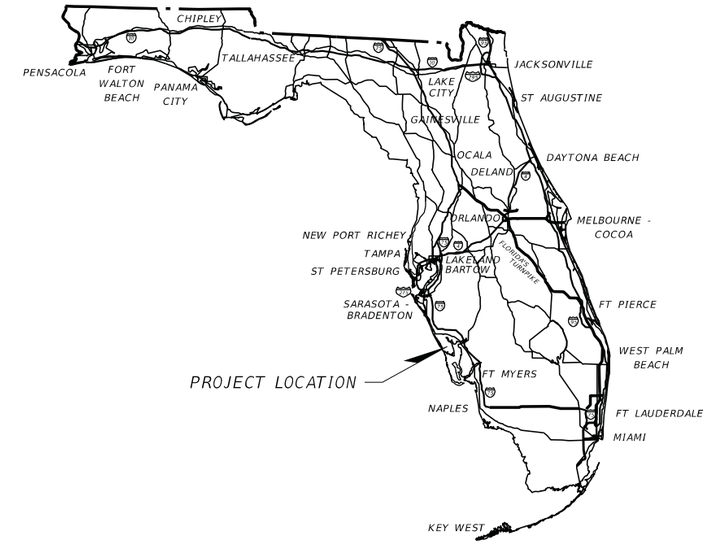

FDOT DEVELOPMENTAL STANDARD PLANS

SHEET NO.	SHEET DESCRIPTION
D400-092	APPROACH SLABS (20 FT.) (FLEXIBLE PAVEMENT APPROACHES)

FDOT STANDARD PLANS

SHEET NO.	SHEET DESCRIPTION
102-600	GENERAL INFORMATION FOR TRAFFIC CONTROL THROUGH WORK ZONES
515-021	PEDESTRIAN/BICYCLE BULLET RAILING FOR TRAFFIC RAILINGS
515-022	PEDESTRIAN/BICYCLE BULLET RAILING DETAILS
521-423	TRAFFIC RAILING - (32" VERTICAL SHAPE)
536-001	GUARDRAIL
536-002	GUARDRAIL TRANSITIONS AND CONNECTIONS FOR EXISTING BRIDGES

EXISTING PLANS

ORIGINAL BRIDGE PLANS (2 SHEETS) FOR REFERENCE

BEGIN PROJECT

END PROJECT

END BRIDGE

BEGIN BRIDGE

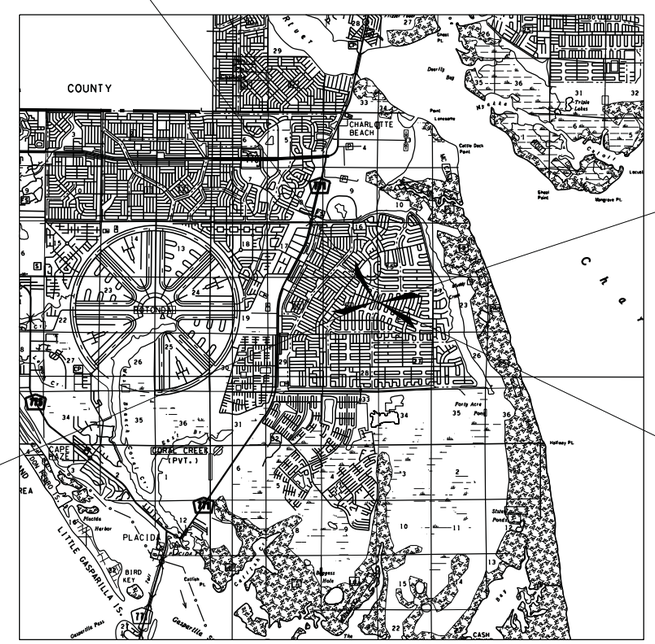

STRUCTURE SHOP DRAWINGS TO BE SUBMITTED TO:

ROLANDO CORSA, PE
KCI TECHNOLOGIES, INC.
4041 CRESCENT PARK DRIVE
TAMPA, FLORIDA 33578

PLANS PREPARED BY:

KCI TECHNOLOGIES, INC.
4041 CRESCENT PARK DRIVE
TAMPA, FLORIDA 33578

NOTE: THE SCALE OF THESE PLANS MAY HAVE CHANGED DUE TO REPRODUCTION.

GOVERNING STANDARDS PLANS:

Florida Department of Transportation, FY 2023-24 Standard Plans for Road and Bridge Construction and applicable Interim Revisions (IRs).

Standard Plans for Road Construction and associated IRs are available at the following website: http://www.fdot.gov/design/standardplans

Standard Plans for Bridge Construction are include in the Structures Plan Component

GOVERNING STANDARD SPECIFICATIONS:

Florida Department of Transportation, FY 2023-24 Standard Specifications for Road and Bridge Construction (as amended by contract documents) at the following website:
http://www.fdot.gov/programmanagement/Implemented/SpecBooks

KEY SHEET REVISIONS	
DATE	DESCRIPTION

STRUCTURE PLANS
ENGINEER OF RECORD: ROLANDO CORSA, PE

P.E. NO.: 73191

FISCAL YEAR	SHEET NO.
23	B-1

NOTICE: THE OFFICIAL RECORD OF THIS SHEET IS THE ELECTRONIC FILE DIGITALLY SIGNED AND SEALED UNDER RULE 61G15-23.004, F.A.C.

ROLANDO CORSA
LICENSE
No 73191
STATE OF FLORIDA
PROFESSIONAL ENGINEER

THIS ITEM HAS BEEN DIGITALLY SIGNED AND SEALED BY:

Rolando Corsa
2023.09.27 11:38:43 -04'00'

PRINTED COPIES OF THIS DOCUMENT ARE NOT CONSIDERED SIGNED AND SEALED. THE SIGNATURE MUST BE VERIFIED IN THE ELECTRONIC DOCUMENTS.

KCI TECHNOLOGIES, INC.
4041 CRESCENT PARK DRIVE
TAMPA, FLORIDA 33578
PH: 813-767-0538
ROLANDO CORSA, PE #73191

THE ABOVE NAMED PROFESSIONAL ENGINEER SHALL BE RESPONSIBLE FOR THE FOLLOWING SHEETS IN ACCORDANCE WITH RULE 61G15-23.004, F.A.C.

STRUCTURE PLANS

SHEET NO.	DESCRIPTION
B-1	KEY SHEET
B-2	SIGNATURE SHEET
B-3	GENERAL NOTES (1 OF 2)
B-4	GENERAL NOTES (2 OF 2)
B-5	SUMMARY OF QUANTITIES
B-6	STANDARD CONCRETE SPALL REPAIR DETAILS
B-7	PLAN AND ELEVATION
B-8	REMOVAL OF EXISTING STRUCTURE (1 OF 2)
B-9	REMOVAL OF EXISTING STRUCTURE (2 OF 2)
B-10	END BENTS 1 AND 6
B-11	TYPICAL SECTION (1 OF 2)
B-12	TYPICAL SECTION (2 OF 2)
B-13	SUPERSTRUCTURE DETAILS
B-14	SUPERSTRUCTURE REPAIR DETAILS
B-15	CAST-IN-PLACE CONCRETE BEAMS
B-16	SUBSTRUCTURE DETAILS
B-17	APPROACH SLAB DETAILS (1 OF 2)
B-18	APPROACH SLAB DETAILS (2 OF 2)
B-19	UTILITY SUPPORT DETAILS

Bridge No. 014056

REVISIONS

DATE	BY	DESCRIPTION	DATE	BY	DESCRIPTION

ENGINEERS
PLANNERS
SCIENTISTS
CONSTRUCTION MANAGERS
KCI TECHNOLOGIES www.kci.com
KCI TECHNOLOGIES, INC.
4041 CRESCENT PARK DRIVE
TAMPA, FL 33578
PHONE: (813) 767-0538
ROLANDO CORSA, P.E. NO. 73191

DRAWN BY: JMV 2/23
CHECKED BY: AJS 2/23
DESIGNED BY: JMV 2/23
CHECKED BY: RC 2/23

CHARLOTTE COUNTY PUBLIC WORKS

ROAD NO.	COUNTY	PROJECT NUMBER
N/A	CHARLOTTE	N/A

SHEET TITLE: SIGNATURE SHEET

PROJECT NAME: SOUTH GULF COVE BRIDGE REPAIRS

REF. DWG. NO.

SHEET NO. B-2

GENERAL NOTES

DESIGN LOADS: C.I.P. CONCRETE BEAM

1. PEDESTRIAN LIVE LOAD: 75 PSF
   IN ACCORDANCE WITH AASHTO LRFD.

2. DEAD LOADS:

32" VERTICAL SHAPE TRAFFIC RAILING	385 PLF
ALUMINUM DOUBLE BULLET RAILING	10 PLF
REINFORCED CONCRETE	150 PCF

3. UTILITIES:
   WATER LINE AND ATTACHMENTS TO C.I.P. CONCRETE BEAM HAVE BEEN INCLUDED IN DESIGN.

4. CONSTRUCTION LOADS:
   IN ACCORDANCE WITH AASHTO LRFD AND FDOT STRUCTURES DESIGN GUIDELINES (SDG) 2.13.

PRIMARY SCOPE OF WORK

1.0 MOBILIZATION
2.0 MAINTENANCE OF TRAFFIC
3.0 SELECTIVE CLEARING AND GRUBBING
4.0 REMOVAL OF EXISTING CONCRETE TRAFFIC BARRIERS
5.0 REMOVAL OF EXISTING CONCRETE SIDEWALKS
6.0 MILLING EXISTING ASPHALT PAVEMENT
7.0 MISC. BRIDGE REPAIRS (SPALLS, ETC.)
8.0 BRIDGE DECK EXPANSION JOINTS
9.0 8'-2" CONCRETE SIDEWALK
10.0 1'-0" CONCRETE CURB
11.0 CONCRETE TRAFFIC RAILING-BRIDGE, 32" VERTICAL FACE
12.0 BULLET RAIL, DOUBLE RAIL
13.0 WATERPROOFING MEMBRANE
14.0 ASPHALT PAVEMENT
15.0 THIS ITEM INTENTIONALLY LEFT BLANK
16.0 GUARDRAIL REMOVAL
17.0 APPROACH SIDEWALKS
18.0 CAST-IN-PLACE CONCRETE BEAMS
19.0 ABUTMENT MODIFICATIONS
20.0 UTILITY HANGERS
21.0 MAINTENANCE CLEANING

DRAWINGS AND DIMENSIONS

1. DO NOT SCALE DRAWINGS FOR DIMENSIONS NOT GIVEN.
2. VERIFY ALL EXISTING FIELD CONDITIONS AND DIMENSIONS PRIOR TO COMMENCING REPAIRS OR ORDERING ANY MATERIALS. NOTIFY ENGINEER OF ANY DISCREPANCIES FOUND.
3. ALL DIMENSIONS ARE IN FEET AND INCHES

REINFORCING STEEL

1. ALL REINFORCING STEEL SHALL BE ASTM A615-96, GRADE 60.
2. ALL DIMENSIONS PERTAINING TO LOCATION OF REINFORCEMENT ARE TO CENTERLINE OF BARS EXCEPT WHERE THE CLEAR DIMENSION IS SHOWN TO FACE OF CONCRETE.
3, REINFORCEMENT DETAIL DIMENSIONS ARE OUT-TO-OUT OF BARS.

ENVIRONMENT

LOCATION = COASTAL (SALT-WATER)
SUPERSTRUCTURE: EXTREMELY AGGRESSIVE
SUBSTRUCTURE: EXTREMELY AGGRESSIVE

PLAN DIMENSIONS

ALL DIMENSIONS IN THESE PLANS ARE GIVEN EITHER HORIZONTALLY OR VERTICALLY, UNLESS OTHERWISE NOTED DECK JOINT OPENINGS ARE GIVEN FOR A MEAN TEMPERATURE OF 70°F.

EXISTING PLANS

EXISTING PLANS ARE FOR INFORMATIONAL PURPOSES ONLY.

DIMENSION VERIFICATION

THE DIMENSIONS, ELEVATIONS, AND INTERSECTION ANGLES SHOWN ARE BASED ON INFORMATION AS DETAILED IN THE ORIGINAL CONSTRUCTION PLANS OF THE EXISTING BRIDGES (UNLESS OTHERWISE NOTED), AND MAY NOT REPRESENT THE AS-BUILT CONDITIONS. IT IS THE CONTRACTOR'S RESPONSIBILITY TO VERIFY THE DATA BEFORE CONSTRUCTION OR ORDERING MATERIALS.

DATUM

NO DESIGN SURVEY PERFORMED. SEE EXISTING BRIDGE PLANS FOR REFERENCE ELEVATIONS.

UTILITIES

THE CONTRACTOR SHALL BE RESPONSIBLE FOR LOCATING ALL UTILITIES (INCLUDING SUBAQUEOUS CHANNEL CROSSINGS) PRIOR TO COMMENCING CONSTRUCTION. THE CONTRACTOR SHALL CONTACT SUNSHINE AT (800) 432-4770 AND ANY OTHER LOCAL UTILITIES TO VERIFY EXISTING UTILITIES AT SITE OF CONSTRUCTION IF ANY EXISTING UTILITIES CONFLICT WITH PROPOSED CONSTRUCTION METHODS, MATERIALS, OR EQUIPMENT, THE CONTRACTOR SHALL NOTIFY THE ENGINEER.

INCIDENTAL ITEMS

PAYMENT FOR INCIDENTAL ITEMS NOT SPECIFICALLY COVERED IN THE INDIVIDUAL PAY ITEMS SHALL BE INCLUDED IN THE CONTRACT UNIT PRICE FOR BID ITEMS CONTAINED IN THIS CONTRACT.

CONCRETE

ALL CONCRETE SHALL BE IN ACCORDANCE WITH SECTION 346 OF THE FDOT SPECIFICATIONS.

JOINTS IN CONCRETE

CONSTRUCTION JOINTS WILL BE PERMITTED ONLY AT LOCATIONS INDICATED ON THE PLANS. ADDITIONAL CONSTRUCTION JOINTS OR ALTERATIONS TO THOSE SHOWN SHALL REQUIRE APPROVAL OF THE ENGINEER.

CONCRETE STRESSES:

CONCRETE INFORMATION TABLE

CLASS	APPLICATION	MIN. 28 DAY COMPRESSIVE STRESS
II (BRIDGE DECK)	APPROACH SLAB	4,500 PSI
IV	C.I.P. CONC. BEAM / SIDEWALK / TRAFFIC RAILING	5,500 PSI

SPECIAL MANATEE PROTECTION CONDITIONS:

MANATEES MAY BE PRESENT IN THE AREA. THE CONTRACTOR SHALL COMPLY WITH THE FLORIDA FISH AND WILDLIFE CONVERSATION COMMISSION'S STANDARD MANATEE PROTECTION CONSTRUCTION CONDITIONS FOR IN-WATER WORK.

A. ALL PERSONNEL ASSOCIATED WITH THE PROJECT SHALL BE INSTRUCTED ABOUT THE PRESENCE OF MANATEES AND MANATEE SPEED ZONES, AND THE NEED TO AVOID COLLISIONS WITH AND INJURY TO MANATEES. THE PERMITTEE SHALL ADVISE ALL CONSTRUCTION PERSONNEL THAT THERE ARE CIVIL AND CRIMINAL PENALTIES FOR HARMING, HARASSING, OR KILLING MANATEES WHICH ARE PROTECTED UNDER THE MARINE MAMMAL PROTECTION ACT, THE ENDANGERED SPECIES ACT, AND THE FLORIDA MANATEE SANCTUARY ACT.
B. ALL VESSELS ASSOCIATED WITH THE CONSTRUCTION PROJECT SHALL OPERATE AT "IDLE SPEED/NO WAKE" AT ALL TIMES WHILE IN THE IMMEDIATE AREA AND WHILE IN WATER WHERE THE DRAFT OF THE VESSEL PROVIDES LESS THAN A FOUR-FOOT CLEARANCE FROM THE BOTTOM, ALL VESSELS WILL FOLLOW ROUTES OF DEEP WATER WHENEVER POSSIBLE.
C. SILTATION OR TURBIDITY BARRIERS SHALL BE MADE OF MATERIAL IN WHICH MANATEES CANNOT BECOME ENTANGLED, SHALL BE PROPERLY SECURED, AND SHALL BE REGULARLY MONITORED TO AVOID MANATEE ENTANGLEMENT OR ENTRAPMENT. BARRIERS MUST NOT IMPEDE MANATEE MOVEMENT.
D. ALL ON-SITE PROJECT PERSONNEL ARE RESPONSIBLE FOR OBSERVING WATER-RELATED ACTIVITIES FOR THE PRESENCE OF MANATEE(S), ALL IN-WATER OPERATIONS, INCLUDING VESSELS, MUST BE SHUTDOWN IF A MANATEE(S) COMES WITHIN 50 FEET OF THE OPERATION. ACTIVITIES WILL NOT RESUME UNTIL THE MANATEE(S) HAS MOVED BEYOND THE 50-FOOT RADIUS OF THE PROJECT OPERATION, OR UNTIL 30 MINUTES ELAPSES IF THE MANATEE(S) HAS NOT REAPPEARED WITHIN 50 FEET OF THE OPERATION, ANIMALS MUST NOT BE HERDED AWAY OR HARASSED INTO LEAVING.
E, ANY COLLISION WITH OR INJURY TO A MANATEE SHALL BE REPORTED IMMEDIATELY TO THE FWC HOTLINE AT 1-888-404-FWCC. COLLISION AND/OR INJURY SHOULD ALSO BE REPORTED TO THE U.S. FISH AND WILDLIFE SERVICE IN JACKSONVILLE (1-904-232-2580) FOR NORTH FLORIDA OR VERO BEACH (1-561-562-3909) FOR SOUTH FLORIDA.
F. TEMPORARY SIGNS CONCERNING MANATEES SHALL BE POSTED PRIOR TO AND DURING ALL IN-WATER PROJECT ACTIVITIES. ALL SIGNS ARE TO BE REMOVED BY THE PERMITTEE UPON COMPLETION OF THE PROJECT. AWARENESS SIGNS THAT HAVE ALREADY BEEN APPROVED FOR THIS USE BY THE FLORIDA FISH AND WILDLIFE CONSERVATION COMMISSION (FWC) MUST BE USED. ONE SIGN MEASURING AT LEAST 3 FT. BY 4 FT. WHICH READS CAUTION: MANATEE AREA MUST BE POSTED.

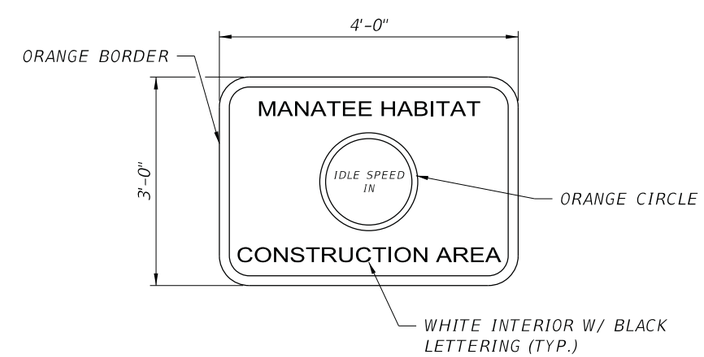

Bridge No. 014056

NOTICE: THE OFFICIAL RECORD OF THIS SHEET IS THE ELECTRONIC FILE DIGITALLY SIGNED AND SEALED UNDER RULE 61G15-23.004, F.A.C.

REVISIONS

DATE	BY	DESCRIPTION	DATE	BY	DESCRIPTION

KCI TECHNOLOGIES
ENGINEERS PLANNERS SCIENTISTS CONSTRUCTION MANAGERS
www.kci.com
KCI TECHNOLOGIES, INC.
4041 CRESCENT PARK DRIVE
TAMPA, FL 33578
PHONE: (813) 767-0538
ROLANDO CORSA, P.E. NO. 73191

DRAWN BY: JMV 2/23
CHECKED BY: AJS 2/23
DESIGNED BY: JMV 2/23
CHECKED BY: RC 2/23

CHARLOTTE COUNTY PUBLIC WORKS

ROAD NO.	COUNTY	PROJECT NUMBER
N/A	CHARLOTTE	N/A

SHEET TITLE: GENERAL NOTES (1 OF 2)
PROJECT NAME: SOUTH GULF COVE BRIDGE REPAIRS
REF. DWG. NO.
SHEET NO. B-3

SPECIAL MANATEE PROTECTION CONDITIONS CONTINUED:

G. A SECOND SIGN MEASURING AT LEAST 8½" x 11" EXPLAINING THE REQUIREMENTS FOR "IDLE SPEED/NO WAKE" AND THE SHUT DOWN OF IN-WATER OPERATIONS MUST BE POSTED IN A LOCATION PROMINENTLY VISIBLE TO ALL PERSONNEL ENGAGED IN WATER-RELATED ACTIVITIES.

CAUTION: MANATEE HABITAT

All project vessels
IDLE SPEED / NO WAKE

When a manatee is within 50 feet of work
all in-water activities must
SHUT DOWN

Report any collision or injury to:
1-888-404-FWCC (1-888-404-3922)

Florida Fish and Wildlife Conservation Commission

ALL SIGNS ARE TO BE REMOVED BY THE CONTRACTOR UPON COMPLETION OF THE PROJECT.

PHASING OF WORK

WORK PHASING AND PROGRESSION OF THE WORK SHALL CONFORM WITH THE TRAFFIC CONTROL NOTES AND THE NOTES AND DETAILS IN THE CONSTRUCTION DRAWINGS.

CONCRETE RESTORATION

FOR REQUIREMENTS ON SURFACE PREPARATION MIXING, PLACING, FINISHING, MATERIAL, AND OTHER RELATED ITEMS, REFER TO THE FDOT SPECIFICATION.

SITE CONDITIONS

THE CONTRACTOR SHALL BE AWARE OF THE SITE CONDITIONS WITH REGARD TO WATER DEPTH. SEA GRASS BEDS AND OTHER HABITAT SHALL NOT BE DISTURBED.

ON SITE AREAS AVAILABLE FOR STAGING OF EQUIPMENT AND MATERIAL HANDLING ARE LIMITED. CONTRACTOR SHALL MAKE ANY NECESSARY ARRANGEMENTS FOR CARRYING OUT THE DESCRIBED WORK INCLUDING ACCESS BY WATERWAY.

CONCRETE COVER

CONCRETE COVER SHOWN IN THE PLANS DOES NOT INCLUDE PLACEMENT OR FABRICATION TOLERANCES UNLESS SHOWN AS "MINIMUM COVER." SEE FDOT SPECIFICATIONS FOR ALLOWABLE TOLERANCES. UNLESS OTHERWISE SHOWN ON THE PLANS, THE FOLLOWING CONCRETE COVERS SHALL BE USED:

CAST-IN-PLACE SUPERSTRUCTURE C.I.P. CONC. BEAM (TOP)	1"
CAST-IN-PLACE SUPERSTRUCTURE C.I.P. CONC. BEAM (BOTT. & SIDES)	2"
CAST-IN-PLACE SUBSTRUCTURE (FORMED SURFACES)	3"
CAST-IN-PLACE TRAFFIC RAILINGS (TOP)	2"
CAST-IN-PLACE TRAFFIC RAILINGS (FRONT & BACK)	3"
CAST-IN-PLACE SIDEWALK & CURB	2"

MATERIAL PRODUCTS

MATERIAL MEETING THE REQUIREMENTS OF THE PLANS AND SPECIFICATIONS SHALL BE INSTALLED IN ACCORDANCE WITH APPROVED MANUFACTURER'S RECOMMENDATIONS.

TRAFFIC CONTROL NOTES

1. CONTRACTOR SHALL BE RESPONSIBLE FOR MAINTAINING TRAFFIC AND USAGE OF THE EXISTING STREETS ADJACENT TO THE PROJECT, ALL TRAFFIC MAINTENANCE CONTROL SHALL BE IN ACCORDANCE WITH THE FLORIDA MANUAL OF TRAFFIC CONTROL AND SAFE PRACTICES FOR STREET AND HIGHWAY CONSTRUCTION, MAINTENACNE, AND UTILITY OPERATIONS AND APPROVED BY CHARLOTTE COUNTY.

2. THE CONTRACTOR SHALL NOTIFY LOCAL EMERGENCY AND RESCUE AGENCIES LOCATED IN THE PROJECT VICINITY INCLUDING BUT NOT LIMITED TO THOSE AGENCIES LISTED BELOW AS WELL AS THE ENGINEER 14 DAYS IN ADVANCE OF ANY LANE CLOSURES OR RESTRICTIONS, AND AGAIN 24 HOURS IN ADVANCE OF EACH SERIES OF LANE CLOSURES.

MAINTENANCE OF NAVIGATION CHANNEL

NOTIFY MR. MICHAEL LIEBERMAN (PER RANDALL OVERTON OF THE USCG) AT 305-415-6744 PRIOR TO THE COMMENCEMENT OF CONSTRUCTION ACTIVITIES, IN ADVANCE OF ACTIONS DURING BRIDGE CONSTRUCTION OR DEMOLITION WHICH POTENTIALLY AFFECT WATERWAY USERS AND PRIOR TO THE PLACEMENT OF ANY FLOATING CONSTRUCTION EQUIPMENT IN THE WATERWAY. NOTIFY NO LESS THAN 60 DAYS IN ADVANCE OF ACTIONS WHICH COULD POTENTIALLY AFFECT THE WATERWAY.

MARINE TRAFFIC

KEEP THE CHANNEL OPEN TO TRAFFIC AT ALL TIMES. MAINTAIN A MINIMUM HORIZONTAL OPENING OF 20 FEET.

PROTECTION OF WATER RESOURCES

THE CONTRACTOR SHALL CONDUCT HIS ACTIVITIES IN A MANNER TO AVOID POLLUTION OF SURFACE AND GROUND WATER AND WETLANDS. THE CONTRACTOR'S CONSTRUCTION METHODS SHALL PROTECT WETLAND AND SURFACE WATER AREAS FROM DAMAGE DUE TO MECHANICAL GRADING, EROSION, SEDIMENTATION VEHICULAR TRAFFIC, AND TURBID DISCHARGES. NO STORAGE OR STOCKPILING OF EQUIPMENT SHALL BE ALLOWED WITHIN ANY WETLAND AREA UNLESS SPECIFICALLY AUTHORIZED UNDER PERMIT. WATER DIRECTLY DERIVED FROM CONSTRUCTION ACTIVITIES SHALL BE COLLECTED IN RETENTION AREAS TO ALLOW SETTLING OF SUSPENDED MATERIALS. ALL MONITORING OF ANY WATER AREAS THAT ARE AFFECTED BY CONSTRUCTION ACTIVITIES SHALL BE THE RESPONSIBILITY OF THE CONTRACTOR.

OIL, FUEL AND HAZARDOUS SUBSTANCE SPILL PREVENTION

THE CONTRACTOR SHALL PREPARE A SPILL CONTINGENCY PLAN IN ACCORDANCE WITH 40CFR, PART 109. THE CONTRACTOR SHALL PREVENT OIL, FUEL OR OTHER HAZARDOUS SUBSTANCES FROM ENTERING THE AIR, GROUND, DRAINAGE, AND LOCAL BODIES OF WATER OR WETLANDS. IN THE EVENT THAT A SPILL OCCURS, DESPITE DESIGN AND PROCEDURAL CONTROLS, THE CONTRACTOR SHALL TAKE IMMEDIATE ACTION TO CONTAIN AND CLEANUP THE SPILL AND REPORT THE SPILL IMMEDIATELY TO THE COUNTY'S REPRESENTATIVE. A WRITTEN REPORT PROVIDING CERTIFICATION OF COMMITMENT OF MANPOWER, EQUIPMENT AND MATERIALS NECESSARY TO PREVENT THE SPREAD AND EFFECT EXPEDITIOUS CLEANUP AND DISPOSAL SHALL BE SUBMITTED.

BRIDGE NAME AND NUMBER

BRIDGE NUMBER AND NAME - "INGRAHAM BLVD. OVER PRESIDENT WATERWAY" SHALL BE PLACED ON THE TRAFFIC RAILINGS IN ACCORDANCE WITH THE TRAFFIC RAILING STANDARD PLANS.

FISH AND WILDLIFE RESOURCE PROTECTION

THE CONTRACTOR SHALL CONTROL AND MINIMIZE INTERFERENCE WITH, DISTURBANCE TO, AND DAMAGE OF FISH AND WILDLIFE RESOURCES. IF APPROPRIATE, THREATENED AND ENDANGERED SPECIES THAT REQUIRE SPECIFIC PROTECTION MEASURES SHALL BE LISTED IN THE ENVIRONMENTAL PROTECTION PLAN. THE PERSON DESIGNATED AS RESPONSIBLE FOR THE ENVIRONMENTAL PROTECTION PLAN SHALL BE ABLE TO IDENTIFY THE THREATENED AND ENDANGERED SPECIES LISTED IN THE ENVIRONMENTAL PROTECTION PLAN. ANY ACTIVITY OBSERVED BY THE CONTRACTOR THAT MAY RESULT IN ADVERSE IMPACT TO THREATENED OR ENDANGERED SPECIES SHALL BE REPORTED IMMEDIATELY TO THE COUNTY AND THE COUNTY'S REPRESENTATIVE, WHO SHALL HAVE SOLE AUTHORITY FOR ANY WORK STOPPAGES, CREATION OF A BUFFER AREA, OR RESTART OF CONSTRUCTION ACTIVITIES.
IN THE EVENT THAT THE COUNTY'S REPRESENTATIVE DETERMINES THAT AN ADVERSE IMPACT TO THREATENED OR ENDANGERED SPECIES MAY OCCUR AS A RESULT OF THE CONSTRUCTION ACTIVITIES, THE COUNTY SHALL NOTIFY THE CORPS OF ENGINEERS AND THE FISH AND WILDLIFE SERVICE. ADVERSE IMPACT IS DEFINED AS TO HARASS, HARM, PURSUE, HUNT, SHOOT, WOUND, KILL, TRAP, CAPTURE, COLLECT, OR TO ATTEMPT TO ENGAGE IN ANY SUCH CONDUCT.

Bridge No. 014056

NOTICE: THE OFFICIAL RECORD OF THIS SHEET IS THE ELECTRONIC FILE DIGITALLY SIGNED AND SEALED UNDER RULE 61G15-23.004, F.A.C.

PAY ITEMS FOR BRIDGE NO. 014056			
ITEM NO.	DESCRIPTION	UNIT	QUANTITY
1.0	MOBILIZATION	LS	1
2.0	MAINTENANCE OF TRAFFIC	LS	1
3.0	SELECTIVE CLEARING AND GRUBBING	LS	1
4.0	REMOVAL OF EXISTING CONCRETE TRAFFIC BARRIER	LF	240
5.0	REMOVAL OF EXISTING CONCRETE SIDEWALK	SF	960
6.0	MILLING EXISTING ASPHALT PAVEMENT	SY	498
7.0	MISC. BRIDGE REPAIRS (SPALLS, ETC.)	LS	1
8.0	REPLACE BRIDGE DECK EXPANSION JOINTS	LF	228
9.0	8'-2" CONCRETE SIDEWALK	SF	1110
10.0	1'-0" CONCRETE CURB	SF	250
11.0	CONCRETE TRAFFIC RAILING-BRIDGE, 32" VERTICAL FACE	LF	320
12.0	BULLET RAIL, DOUBLE RAIL	LF	160
13.0	WATERPROOFING MEMBRANE	SY	480
14.0	ASPHALT PAVEMENT	SY	480
15.0	THIS ITEM INTENTIONALLY LEFT BLANK	-	-
16.0	GUARDRAIL REPLACEMENT	LS	1
17.0	APPROACH SLABS AND SIDEWALKS	SF	600
18.0	CAST-IN-PLACE CONCRETE BEAMS	LF	120
19.0	ABUTMENT MODIFICATIONS (BOTH END BENTS)	LS	1
20.0	UTILITY HANGERS	EA	10
21.0	MAINTENANCE CLEANING	LS	1

PAY ITEM NOTES:

BRIDGE REPAIR BID ITEMS:

1.0 MOBILIZATION - THIS PAY ITEM IS LIMITED TO 5% OF THE TOTAL BID AMOUNT. ANY ADDITIONAL MOBILIZATION COSTS BEYOND THE 5% LIMIT SHALL BE INCLUDED IN OTHER PAY ITEMS THAT REQUIRE THE MOBILIZATION OF EQUIPMENT AND/OR LABOR.

2.0 MAINTENANCE OF TRAFFIC - CONTRACTOR SHALL BE RESPONSIBLE FOR MAINTAINING TRAFFIC AND USAGE OF THE EXISTING STREETS ADJACENT TO THE PROJECT, ALL TRAFFIC MAINTENANCE CONTROL SHALL BE IN ACCORDANCE WITH THE FLORIDA MANUAL OF TRAFFIC CONTROL AND SAFE PRACTICES FOR STREET AND HIGHWAY CONSTRUCTION, MAINTENANCE, AND UTILITY OPERATIONS AND APPROVED BY CHARLOTTE COUNTY. THE CONTRACTOR SHALL INSTITUTE A 90 DAY MAXIMUM BRIDGE CLOSURE AS SHOWN IN THE JOHNSON ENGINEERING MAINTENANCE OF TRAFFIC CONTROL PLANS.

3.0 SELECTIVE CLEARING AND GRUBBING - REMOVE AND DISPOSE OF VEGETATION, OBSTRUCTIONS, ETC., ALONG THE BRIDGE EMBANKMENTS TO ENDS OF APPROACH SLABS AND 15 FT BEYOND BRIDGE FASCIAS. PERFORM ALL SELECTIVE CLEARING AND GRUBBING IN ACCORDANCE WITH FDOT SPECIFICATION ITEM NO. 110.

4.0 REMOVAL OF EXISTING CONCRETE TRAFFIC BARRIERS - REMOVE AND DISPOSED OF THE EXISTING 120 FOOT-LONG BY 42" TRAFFIC RAILING ON THE NORTH AND SOUTH SIDES OF THE BRIDGE. PARTIAL REMOVAL OF BRIDGES SHALL BE IN ACCORDANCE WITH FDOT SPECIFICATION ITEM NO. 110-6.3.

5.0 REMOVAL OF EXISTING CONCRETE SIDEWALKS - REMOVE AND DISPOSED OF THE EXISTING 10" THICK BY 3-FOOT-WIDE BY 120-FOOT-LONG SIDEWALKS ON THE NORTH AND SOUTH SIDES OF THE BRIDGE. PARTIAL REMOVAL OF BRIDGES SHALL BE IN ACCORDANCE WITH FDOT SPECIFICATION ITEM NO. 110-6.3.

6.0 MILLING EXISTING ASPHALT PAVEMENT - MILL ALL (ESTIMATED TO BE 2") OF THE EXISTING ASPHALT WITHIN THE LIMITS SHOWN ON THE PLAN ON SHEET B-8 IN ACCORDANCE WITH FDOT SPECIFICATION SECTION 327. SAWCUT THE EXISTING ASPHALT AT THE BEGIN AND END LIMITS OF THE MILLING ON THE APPROACH ROADWAY. USE EXTREME CARE WHEN REMOVING ASPHALT FROM EXISTING BRIDGE DECK AND REPAIR ANY DAMAGE AT NO COST TO THE COUNTY. REMOVE ALL LOOSE ASPHALT MATERIALS BY SCRAPING OR POWER BROOMING. REQUEST AN INSPECTION BY KCI IMMEDIATELY AFTER THE MILLING OPERATIONS ARE COMPLETED TO ALLOW FOR AN INSPECTION OF THE EXPOSED TOP SURFACE OF THE BRIDGE DECK.

PAY ITEM NOTES (CONT.):

7.0 MISCELLANEOUS BRIDGE REPAIRS - CONSISTS OF RESTORING SPALLED AREAS/CRACKS IN BRIDGE SUPERSTRUCTURE AND SUBSTRUCTURE AS NECESSARY PER THE STANDARD CONCRETE SPALL REPAIR DETAILS ON SHEET B-6.

7.1 SLAB UNIT 2-7 SOUTH BOTTOM EDGE, 2' FROM BENT 3, HAS A 3' X 18" UNSOUND REPAIR.

7.2 ALL FOUR RETAINING WALLS HAVE UNSOUND GROUT PATCHES UP TO 20" X 18" SURROUNDING THE UTILITY PASS THROUGHS.

7.3 ABUTMENT 1 CAP UNDER SLAB UNIT 1-2 HAS A 3' X 18" X ½" AREA OF HONEYCOMB.

7.4 PILES 3-2, 5-5, & 5-7 HAVE SPALLS UP TO 12" X 7" X 1½". PILES 5-1, 5-2, & 5-6 HAVE CORNER SPALLS LESS THAN 6" X 6" X 1".

8.0 REPLACE BRIDGE DECK EXPANSION JOINTS - REMOVE THE EXISTING DETERIORATED 36 FOOT-LONG EXPANSION JOINT MATERIAL AT BOTH END BENTS AND ALL INTERIOR BENTS. SEE DETAIL "A" AND THE SIDEWALK EXPANSION JOINT DETAIL ON SHEET B-14 FOR THE DETAILS FOR THE JOINT REPLACEMENT.

9.0 8'-2" CONCRETE SIDEWALK - INSTALL NEW REINFORCED CONCRETE SIDEWALK PER THE DETAILS SHOWN IN THE PLANS.

10.0 1'-0" CONCRETE CURB - INSTALL NEW REINFORCED CONCRETE CURB PER THE DETAILS SHOWN IN THE PLANS.

11.0 CONCRETE TRAFFIC RAILING-BRIDGE, 32" VERTICAL FACE - REPLACE EXISTING TRAFFIC RAILING ON NORTH AND SOUTH SIDES OF BRIDGE AND APPROACH SLABS AS SHOWN ON PLANS WITH APPROXIMATELY 320 FEET OF NEW RAILINGS IN ACCORDANCE WITH FDOT STANDARD INDEX 521-423.

12.0 BULLET RAIL, DOUBLE RAIL - INSTALL 160 FEET OF NEW PIPE RAILINGS IN ACCORDANCE WITH FDOT STANDARD INDEX 515-022 ON THE SOUTH SIDE OF THE BRIDGE ON THE CONCRETE TRAFFIC RAILING AS SHOWN IN THE PLANS.

13.0 WATERPROOFING MEMBRANE - PROVIDE AND INSTALL A WATER PROOFING MEMBRANE SYSTEM OVER THE BRIDGE DECK AND APPROACH SLABS WITHIN THE LIMITS OF THE WEARING SURFACE AS SHOWN ON THE PLAN ON SHEET B-7, AND THE TYPICAL SECTIONS ON SHEETS B-11 & B-12, PER THE TECHNICAL SPECIAL PROVISIONS PROVIDED. NO SUBSTITUTIONS SHALL BE ALLOWED. CONCRETE SURFACE PREPARATION AND MEMBRANE APPLICATION SHALL BE DONE IN ACCORDANCE WITH THE MANUFACTURER'S RECOMMENDATIONS INCLUDING THE APPLICATION OF A PRIMER ON THE BRIDGE DECK AND A TACK COAT OVER THE MEMBRANE PRIOR TO THE PLACEMENT OF THE ASPHALT.

14.0 ASPHALT PAVEMENT - PROVIDE AND INSTALL 1.5" MIN. & 3" MAX. OF TYPE "S" ASPHALT WEARING SURFACE WITH TACK IN ONE LIFT ON THE BRIDGE DECK AND ON THE APPROACH SLABS, TO MATCH EXISTING ROADWAY PROFILE, WITHIN THE LIMITS SHOWN ON THE PLAN ON SHEET B-7 AND TYPICAL SECTIONS ON SHEETS B-11 & B-12.

16.0 GUARDRAIL REPLACEMENT - REMOVE AND DISPOSE OF THE 65 LF OF EXISTING GUARD RAILING AT ALL QUADRANTS AND MISCELLANEOUS ASPHALT WITHIN THE LIMITS SHOWN ON THE PLANS IN ACCORDANCE WITH FDOT SPECIFICATION ITEM NO. 536-73. INSTALL APPROXIMATELY 260 LF OF NEW THRIE BEAM AND W-BEAM GUARD RAILING WITHIN THE LIMITS SHOWN ON THE PLANS IN ACCORDANCE WITH FDOT SPECIFICATION ITEM NO. 536-1-1. INCLUDE THE COST OF THE 2" THICK BY 2'-6" WIDE STRIP OF MISCELLANEOUS ASPHALT UNDER THE GUARDRAIL AND ANY GRADING AND FILL NEEDED TO RAISE THE GRADE WITHIN THE LIMITS OF THE NEW GUARDRAIL.

17.0 APPROACH SLABS AND SIDEWALKS - REMOVE AND DISPOSE OF THE EXISTING APPROACH SLABS AND SIDEWALKS AT ALL 4 QUADRANTS OF THE BRIDGE PER THE LIMITS SHOWN ON SHEET B-17 & B-18. INSTALL NEW REINFORCED CONCRETE APPROACH SLABS WITH CURBS AND SIDEWALKS PER THE DETAILS SHOWN IN THE PLANS. INCLUDE THE COST OF EXCAVATION, BACKFILL, CRUSHED STONE BASE AND REINFORCING STEEL IN THE PRICE BID FOR THIS WORK ITEM.

18.0 CAST-IN-PLACE CONCRETE BEAMS - PROVIDE AND INSTALL (5) 2' WIDE X 1.25' DEEP X 24' LONG CAST-IN-PLACE CONCRETE BEAMS OVER THE EXISTING SUBSTRUCTURE OVERHANGS ON THE SOUTH SIDE OF THE BRIDGE. INCLUDE THE COST OF REINFORCING STEEL, DOWELS AND BEARING PADS IN THE PRICE BID FOR THIS WORK ITEM.

19.0 ABUTMENT MODIFICATIONS - REMOVE AND DISPOSE OF THE END POSTS, KEEPER CURBS, PARTIAL REMOVAL OF THE WING WALLS FROM BOTH SIDES OF THE ABUTMENTS, AND A PARTIAL CAP REMOVAL FROM THE SOUTH ENDS OF BOTH ABUTMENTS TO ALLOW FOR WIDENING OF CAP TO SUPPORT 2' WIDE C.I.P. CONCRETE BEAM AS DETAILED IN THE PLANS. PROVIDE AND INSTALL THE REINFORCED CONCRETE PER THE DETAILS ON SHEET B-10.

20.0 UTILITY HANGERS - PROVIDE AND INSTALL UTILITY SUPPORTS AS SHOWN ON SHEET B-19.

21.0 MAINTENANCE CLEANING - POWER WASH BRIDGE END POSTS, FASCIA AND OUTSIDE FACES OF FASCIA GIRDERS, CURBS AND SIDEWALKS WITHIN THE LIMITS OF BRIDGE AND NEW GUARDRAILS, AND THE VISIBLE FACES OF PIER CAPS, ABUTMENT CAPS, AND RETAINING WALLS.

Bridge No. 014056

NOTICE: THE OFFICIAL RECORD OF THIS SHEET IS THE ELECTRONIC FILE DIGITALLY SIGNED AND SEALED UNDER RULE 61G15-23.004, F.A.C.

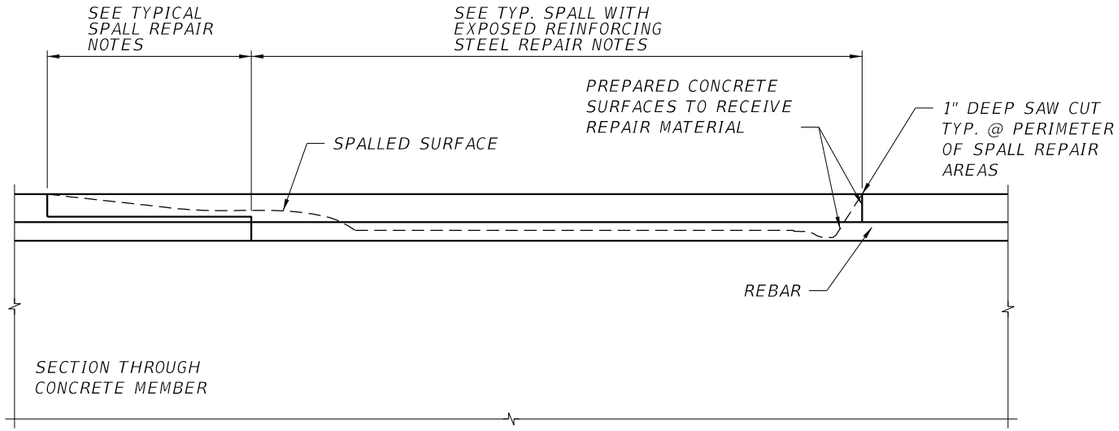

CONCRETE SPALL REPAIR DETAIL

APPLICABLE TO HORIZONTAL, VERTICAL AND OVERHEAD LOCATIONS

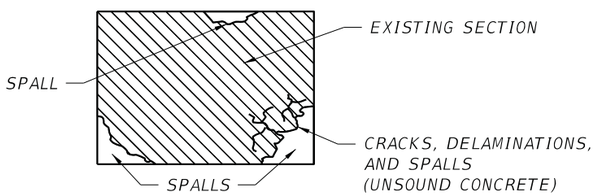

TYPICAL DELAMINATION AND SPALLS

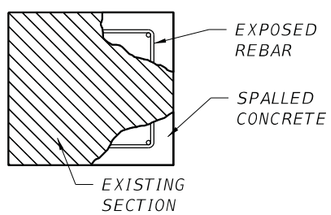

TYPICAL SPALL WITH EXPOSED REBARS

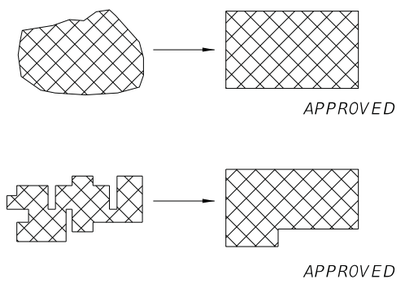

SIMPLE PATCH CONFIGURATION

AT CORNER LOCATIONS PROVIDE RIGHT ANGLE CUTS. PATCH CONFIGURATIONS SHALL BE KEPT AS SIMPLE AS POSSIBLE. INDIVIDUAL REPAIR AREAS WITHIN 2 FEET SHALL BE JOINED AT THE DIRECTION OF THE ENGINEER.

EXPOSED REINFORCING STEEL NOTES

1. REMOVE RUST FROM EXPOSED REINFORCING STEEL BY ABRADING TO "WHITE METAL CONDITION" AND PREPARE SURFACES IN ACCORDANCE WITH ICRI TECHNICAL GUIDE 03730 "GUIDE FOR SURFACE PREPARATION" OF DETERIORATED CONCRETE RESULTING FROM REINFORCING STEEL CORROSION".

CONCRETE REMOVAL AND SURFACE PREPARATION NOTES

1. REMOVE ALL UNSOUND CONCRETE AND PREPARE SURFACES FOR REPAIR IN ACCORDANCE WITH ICRI TECHNICAL GUIDELINES 03730 "GUIDE FOR SURFACE PREPARATION" OF DETERIORATED CONCRETE RESULTING FROM REINFORCING STEEL CORROSION".
2. ALL REPAIR AREAS SHALL HAVE SQUARE EDGES AROUND THE PERIMETER OF THE SPALL DEFINED BY ¾" DEEP SAW CUT LINES. CHIP THE REPAIR EDGES CLEAN TO FORM 45 TO 90 DEGREE CORNERS ALONG THE EDGES AND CORNERS OF THE REPAIR AREA. THE DEPTH OF THE CHIPPED EDGE SHALL BE ¾" OR GREATER. FEATHERED EDGES WILL NOT BE ACCEPTABLE.
3. REMOVE UNSOUND CONCRETE USING MECHANICAL ABRASION, BUT DO NOT USE EXCESSIVE FORCE, WHICH MAY CAUSE MICRO-FRACTURING OF THE SOUND CONCRETE.
4. CARE SHALL BE TAKEN TO AVOID DAMAGING THE EXISTING REINFORCEMENT.
5. PREPARED SURFACES SHALL BE INTENTIONALLY ROUGHENED TO A MINIMUM PROFILE OF ¼" TO PROVIDE MECHANICAL LOCK FOR THE REPAIR.
6. CONCRETE SURFACES SHALL BE STRUCTURALLY SOUND AND FREE OF BOND INHIBITING SURFACES.
7. APPLY A TYPE A EPOXY COMPOUND IN ACCORDANCE WITH SECTION 926 OF THE SPECIFICATION TO THE EXISTING CONCRETE SURFACES PRIOR TO PLACING THE FRESH REPAIR MATERIAL.

CONCRETE SPALL REPAIR NOTES

1. RESTORE CONCRETE SURFACES USING APPROVED MATERIALS IN ACCORDANCE WITH SECTION 926 OR SECTION 930 OF THE SPECIFICATIONS.
2. FOR SPALLS WITH AN AVERAGE DEPTH OF 1" OR LESS, REPAIR USING A TYPE F-1 OR TYPE F-2 EPOXY REPAIR MORTAR, FOR SPALLS WITH AN AVERAGE DEPTH GREATER THAN 1", REPAIR USING A RAPID HARDENING CONCRETE MORTAR.
3. SELECT MATERIALS SUITABLE FOR APPLICATION INCLUDING ORIENTATION (E.G. HORIZONTAL, VERTICAL OR OVERHEAD APPLICATION) AND THICKNESS.
4. MIX, PLACE AND CURE REPAIR MATERIALS IN ACCORDANCE WITH MANUFACTURER'S RECOMMENDATIONS.
5. FINISH REPAIR MATERIALS FLUSH WITH THE ORIGINAL CONCRETE SURFACE (U.N.D). THE SURFACE FINISH SHALL MEET THE REQUIREMENTS FOR A GENERAL SURFACE FINISH PER SECTION 400 OF THE SPECIFICATIONS.
6. COMPLETION OF CLEANING OPERATIONS AND REPAIR SHALL OCCUR WITHIN THE SAME DAY AND SHALL NOT EXCEED THE BONDING AGENT WINDOW OF APPLICATION.
7. SAW-CUT 1" AT THE AREA OF THE DAMAGED CONCRETE.

GENERAL NOTES

1. IN THE PRESENCE OF THE ENGINEER, CLEARLY OUTLINE ALL AREAS IN NEED OF REPAIR WITH AN APPROVED PAINT OR MARKER PRIOR TO DEMOLITION. NO DEMOLITION OF ANY AREA OR MEMBER OF THE BRIDGE SHALL BE PERFORMED UNTIL APPROVAL FROM THE ENGINEER. INFORM THE ENGINEER IF A REMOVAL AREA EXCEEDS HALF THE THICKNESS OF THE SECTION.
2. THE ESTIMATED CONCRETE REPAIR QUANTITIES INCLUDED IN THE BID FORM WERE DETERMINED BY INCREASING THE REPAIR AREAS DOCUMENTED IN THE FDOT BRIDGE INSPECTION REPORT BY APPROXIMATELY 50% TO PROVIDE FOR CONTINGENCIES. THE ACTUAL REPAIR AREAS WILL BE DETERMINED IN THE FIELD BY THE CONTRACTOR AND AS APPROVED BY THE ENGINEER. THE INTENT IS TO REMOVE THE DELAMINATED CONCRETE AND OLD PATCHES AND INSTALL NEW PATCHING REPAIRS USING SAW CUTS AT THE PERIMETER OF THE REPAIR AREAS AS SHOWN ON THIS SHEET.
3. PROVIDE AND INSTALL STAINLESS STEEL TAPCONS ON A 6" BY 6" GRID WITH STAINLESS STEEL WIRE IN BETWEEN EACH ADJACENT TAPCON WITHIN THE PATCHES AT ALL REPAIR AREAS THAT ARE NOT MECHANICALLY BONDED TO EXISTING REBAR.
4. USE A METAL DETECTOR TO AVOID IMPACTING THE PRESTRESS WIRES WHEN INSTALLING THE TAPCONS ON THE BEAM UNDERSIDE DURING THE CONCRETE REMOVAL OPERATIONS.
5. APPLY BASF MASTEREMACO P 124 BONDING AGENT, OR APPROVED EQUAL, TO EXISTING CONCRETE SURFACES PRIOR TO PLACING THE FRESH REPAIR MATERIAL.
6. USE BASF MATEREMACO N 425 REPAIR MORTAR, OR APPROVED EQUAL, FOR ALL HORIZONTAL, VERTICAL AND OVERHEAD SPALLS.
7. ALL CONSTRUCTION DEBRIS SHALL BE DISPOSED OF IN ACCORDANCE WITH STATE AND LOCAL REGULATIONS.

Bridge No. 014056

NOTICE: THE OFFICIAL RECORD OF THIS SHEET IS THE ELECTRONIC FILE DIGITALLY SIGNED AND SEALED UNDER RULE 61G15-23.004, F.A.C.

REVISIONS					
DATE	BY	DESCRIPTION	DATE	BY	DESCRIPTION

KCI TECHNOLOGIES
ENGINEERS PLANNERS SCIENTISTS CONSTRUCTION MANAGERS
www.kci.com
KCI TECHNOLOGIES, INC.
4041 CRESCENT PARK DRIVE
TAMPA, FL 33578
PHONE: (813) 767-0538
ROLANDO CORSA, P.E. NO. 73191

DRAWN BY:	CHECKED BY:	DESIGNED BY:	CHECKED BY:
JMV 2/23	AJS 2/23	JMV 2/23	RC 2/23

CHARLOTTE COUNTY PUBLIC WORKS

ROAD NO.	COUNTY	PROJECT NUMBER
N/A	CHARLOTTE	N/A

SHEET TITLE: STANDARD CONCRETE SPALL REPAIR DETAILS

PROJECT NAME: SOUTH GULF COVE BRIDGE REPAIRS

REF. DWG. NO.

SHEET NO. B-6

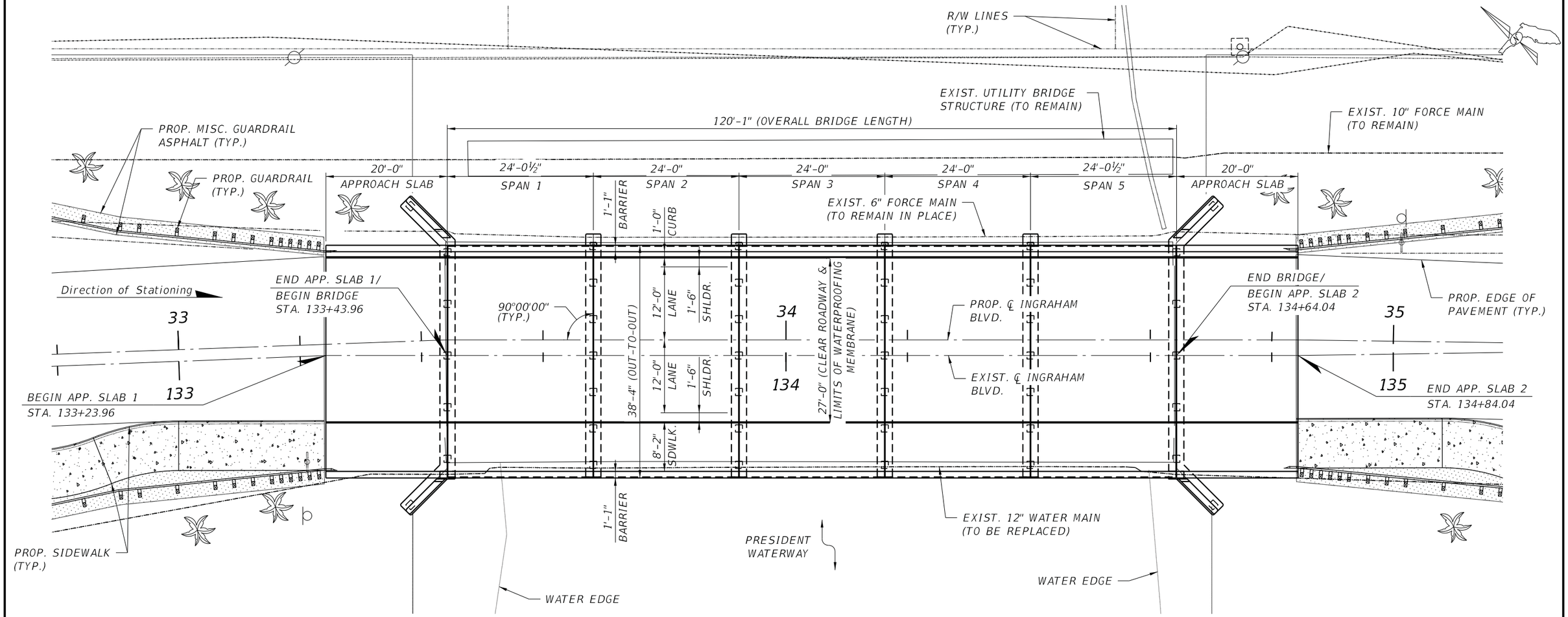

PLAN

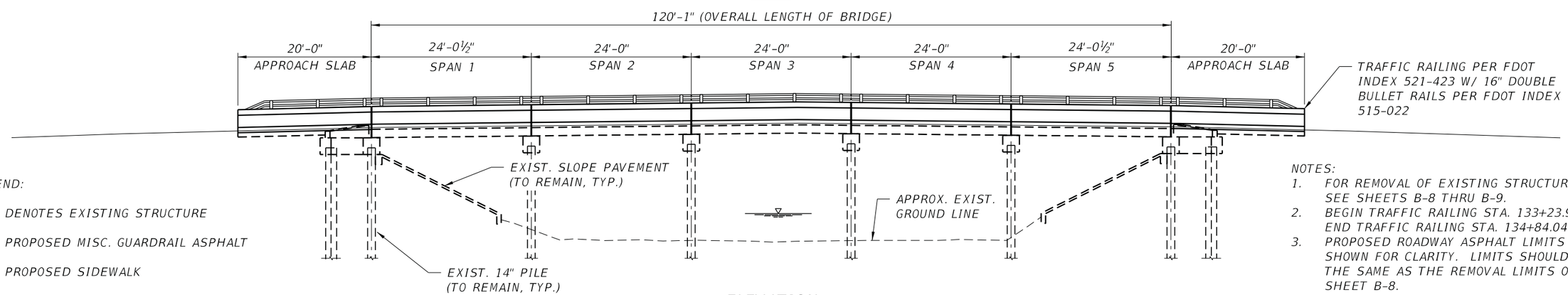

ELEVATION

LEGEND:

- DENOTES EXISTING STRUCTURE
- PROPOSED MISC. GUARDRAIL ASPHALT
- PROPOSED SIDEWALK

NOTES:

1. FOR REMOVAL OF EXISTING STRUCTURE, SEE SHEETS B-8 THRU B-9.
2. BEGIN TRAFFIC RAILING STA. 133+23.96 END TRAFFIC RAILING STA. 134+84.04
3. PROPOSED ROADWAY ASPHALT LIMITS NOT SHOWN FOR CLARITY. LIMITS SHOULD BE THE SAME AS THE REMOVAL LIMITS ON SHEET B-8.

Bridge No. 014056

REVISIONS					
DATE	BY	DESCRIPTION	DATE	BY	DESCRIPTION

KCI TECHNOLOGIES
ENGINEERS PLANNERS SCIENTISTS CONSTRUCTION MANAGERS
www.kci.com

KCI TECHNOLOGIES, INC.
4041 CRESCENT PARK DRIVE
TAMPA, FL 33578
PHONE: (813) 767-0538
ROLANDO CORSA, P.E. NO. 73191

DRAWN BY: JMV 2/23
CHECKED BY: AJS 2/23
DESIGNED BY: JMV 2/23
CHECKED BY: RC 2/23

CHARLOTTE COUNTY PUBLIC WORKS

ROAD NO.	COUNTY	PROJECT NUMBER
N/A	CHARLOTTE	N/A

SHEET TITLE: PLAN AND ELEVATION

PROJECT NAME: SOUTH GULF COVE BRIDGE REPAIRS

REF. DWG. NO.

SHEET NO. B-7

NOTICE: THE OFFICIAL RECORD OF THIS SHEET IS THE ELECTRONIC FILE DIGITALLY SIGNED AND SEALED UNDER RULE 61G15-23.004, F.A.C.

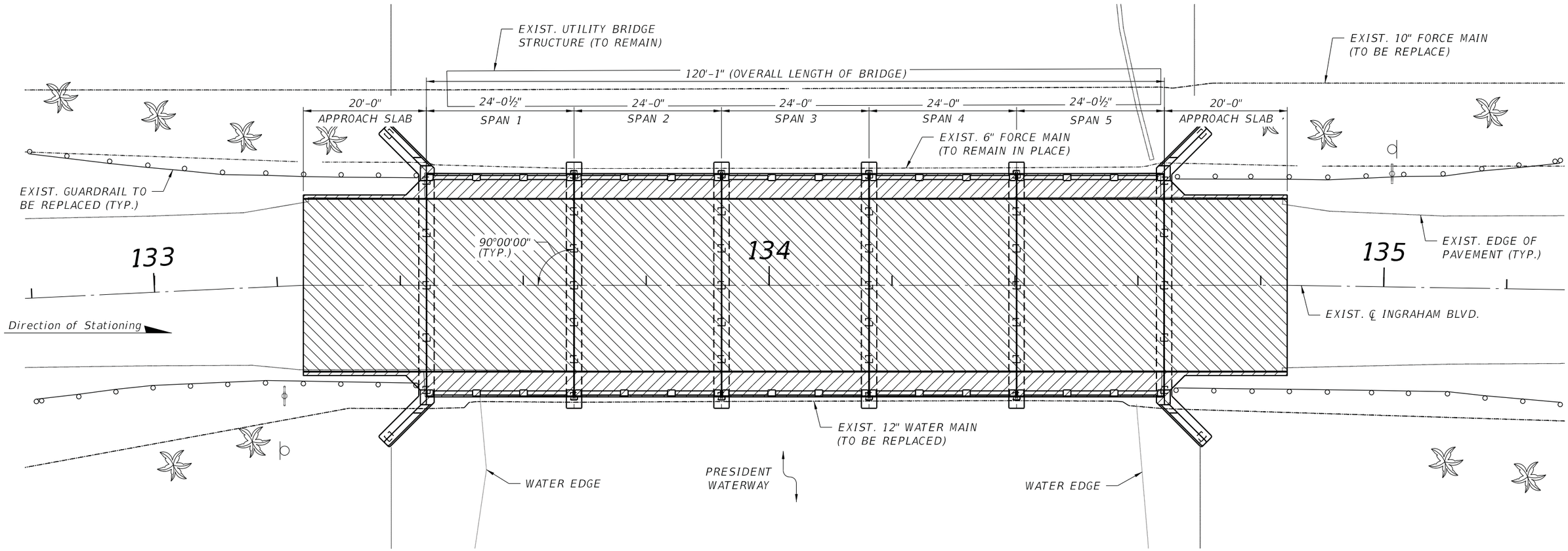

PLAN

NOTES:

1. CONTRACTOR SHALL REMOVE ALL ELEMENTS OF THE CURB, RAIL, ASPHALT AND PARTIAL APPROACH SLABS. THE CONTRACTOR SHALL BE RESPONSIBLE FOR DISPOSAL OF ALL REMOVED ELEMENTS.
2. USE EXTREME CARE WHEN REMOVING ASPHALT FROM THE EXISTING BRIDGE DECK. REPAIR ANY DAMAGE AT NO COST TO THE DEPARTMENT.
3. FOR PARTIAL REMOVAL OF END BENTS, SEE SHEET B-9.
4. FOR PARTIAL REMOVAL OF APPROACH SLABS, SEE SHEETS B-17 & B-18.

LEGEND:

- DENOTES EXISTING STRUCTURE
- REMOVAL OF EXISTING SIDEWALKS, BARRIER RAILS & CURBS.
- REMOVAL OF EXISTING ASPHALT

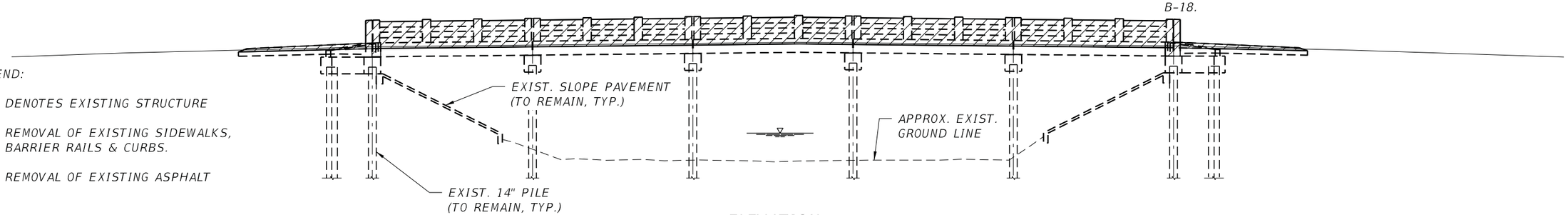

ELEVATION

Bridge No. 014056

REVISIONS					
DATE	BY	DESCRIPTION	DATE	BY	DESCRIPTION

KCI TECHNOLOGIES
ENGINEERS PLANNERS SCIENTISTS CONSTRUCTION MANAGERS
www.kci.com

KCI TECHNOLOGIES, INC.
4041 CRESCENT PARK DRIVE
TAMPA, FL 33578
PHONE: (813) 767-0538
ROLANDO CORSA, P.E. NO. 73191

DRAWN BY:	CHECKED BY:	DESIGNED BY:	CHECKED BY:
JMV 2/23	AJS 2/23	JMV 2/23	RC 2/23

CHARLOTTE COUNTY PUBLIC WORKS

ROAD NO.	COUNTY	PROJECT NUMBER
N/A	CHARLOTTE	N/A

SHEET TITLE: REMOVAL OF EXISTING STRUCTURE (1 OF 2)

PROJECT NAME: SOUTH GULF COVE BRIDGE REPAIRS

REF. DWG. NO.

SHEET NO. B-8

NOTICE: THE OFFICIAL RECORD OF THIS SHEET IS THE ELECTRONIC FILE DIGITALLY SIGNED AND SEALED UNDER RULE 61G15-23.004, F.A.C.

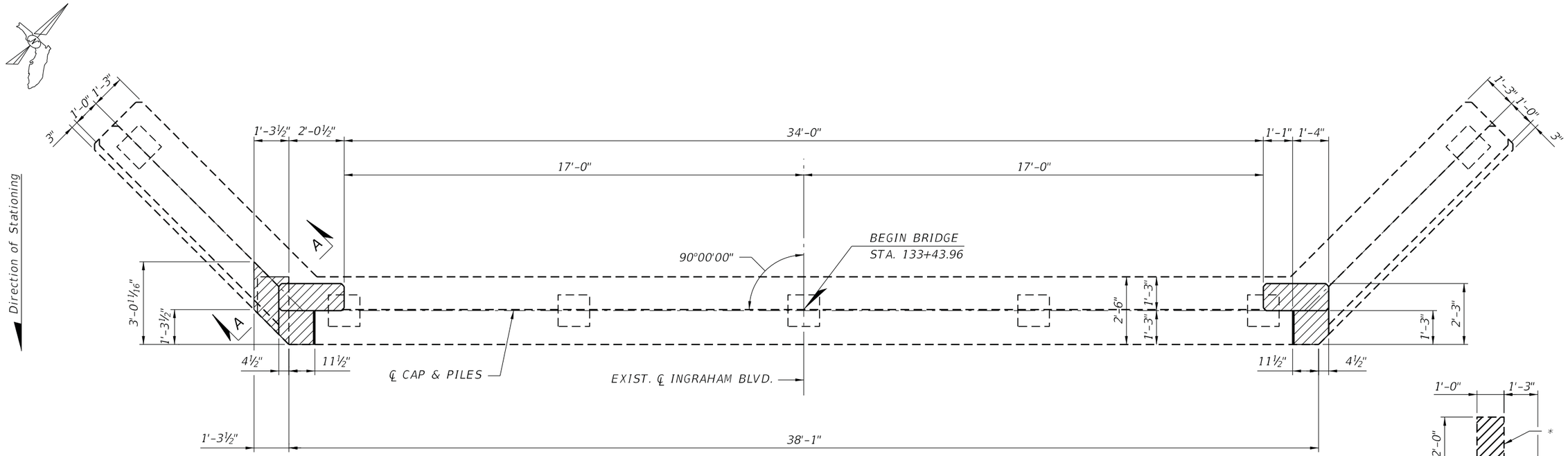

PLAN

(END BENT 1 SHOWN, END BENT 6 SIMILAR OPPOSITE)

* PARTIAL REMOVAL OF WALL (FOOTER TO REMAIN)

LEGEND:

DENOTES REMOVAL OF EXISTING STRUCTURE

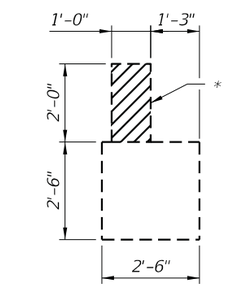

SECTION A-A

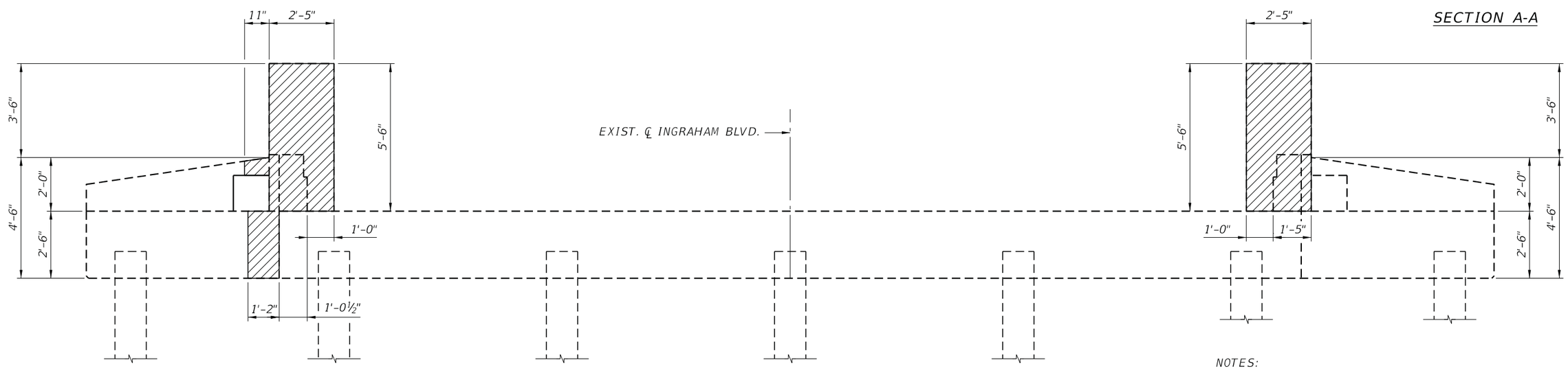

ELEVATION

(LOOKING DOWNSTATION)

(END BENT 1 SHOWN, END BENT 6 SIMILAR OPPOSITE)

NOTES:

1. FOR REMOVAL OF SUPERSTRUCTURE, SEE SHEET B-8.

Bridge No. 014056

REVISIONS					
DATE	BY	DESCRIPTION	DATE	BY	DESCRIPTION

KCI TECHNOLOGIES www.kci.com
ENGINEERS PLANNERS SCIENTISTS CONSTRUCTION MANAGERS

KCI TECHNOLOGIES, INC.
4041 CRESCENT PARK DRIVE
TAMPA, FL 33578
PHONE: (813) 767-0538
ROLANDO CORSA, P.E. NO. 73191

DRAWN BY: JMV 2/23
CHECKED BY: AJS 2/23
DESIGNED BY: JMV 2/23
CHECKED BY: RC 2/23

CHARLOTTE COUNTY PUBLIC WORKS

ROAD NO.	COUNTY	PROJECT NUMBER
N/A	CHARLOTTE	N/A

SHEET TITLE: REMOVAL OF EXISTING STRUCTURE (2 OF 2)

PROJECT NAME: SOUTH GULF COVE BRIDGE REPAIRS

REF. DWG. NO.

SHEET NO. B-9

Jose.Valencia 5/16/2023 2:07:43 PM W:\Florida Structures\Jobs\2021\FS21-(912106552) (S. Gulf Cove ADA Upgrade - Charlotte)\drawings\Bridge 4 - Ingraham Blvd. over President\For Construction\Backup Files\B9StructureRemoval02.dgn

NOTICE: THE OFFICIAL RECORD OF THIS SHEET IS THE ELECTRONIC FILE DIGITALLY SIGNED AND SEALED UNDER RULE 61G15-23.004, F.A.C.

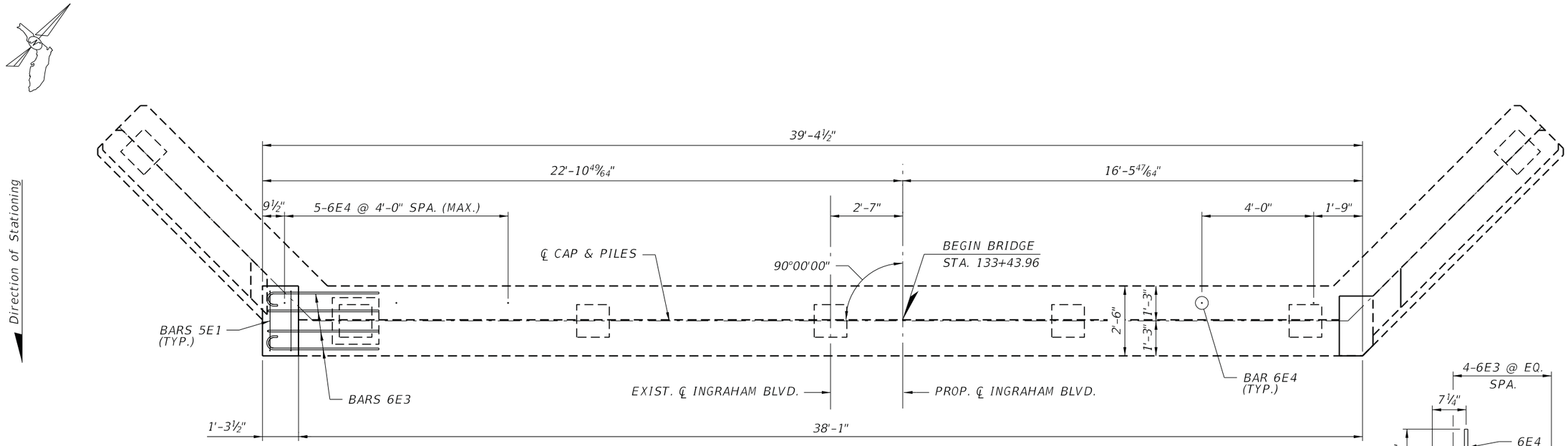

PLAN

(END BENT 1 SHOWN, END BENT 6 SIMILAR)

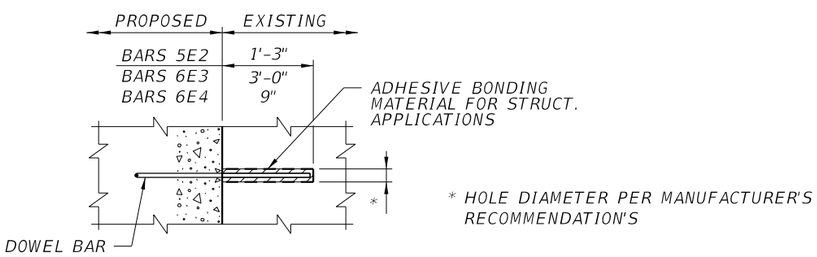

* HOLE DIAMETER PER MANUFACTURER'S RECOMMENDATION'S

DOWEL DETAIL

DOWEL NOTES:

1. EXISTING REINFORCING BARS SHALL REMAIN IN PLACE. IF ANY REBAR ARE BROKEN OR DAMAGED, THEY SHALL BE REPLACED WITH A DOWEL, SEE DOWEL DETAIL ABOVE. THE COST OF THE DOWEL SHALL BE AT THE CONTRACTOR'S EXPENSE.
2. VERIFY THAT HOLES FOR DOWEL BARS ARE THOROUGHLY CLEANED AND DRY PRIOR TO PLACING BOND MATERIAL.
3. COMPLY WITH FDOT SPECIFICATIONS SECTIONS 416 AND 937.

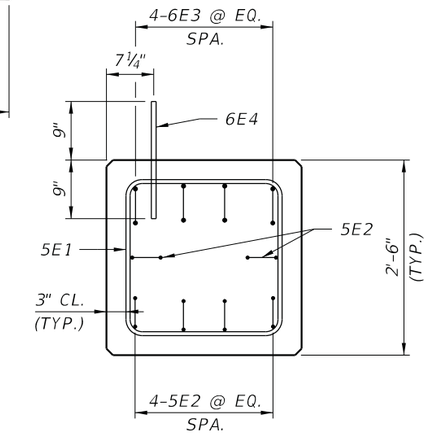

SECTION A-A

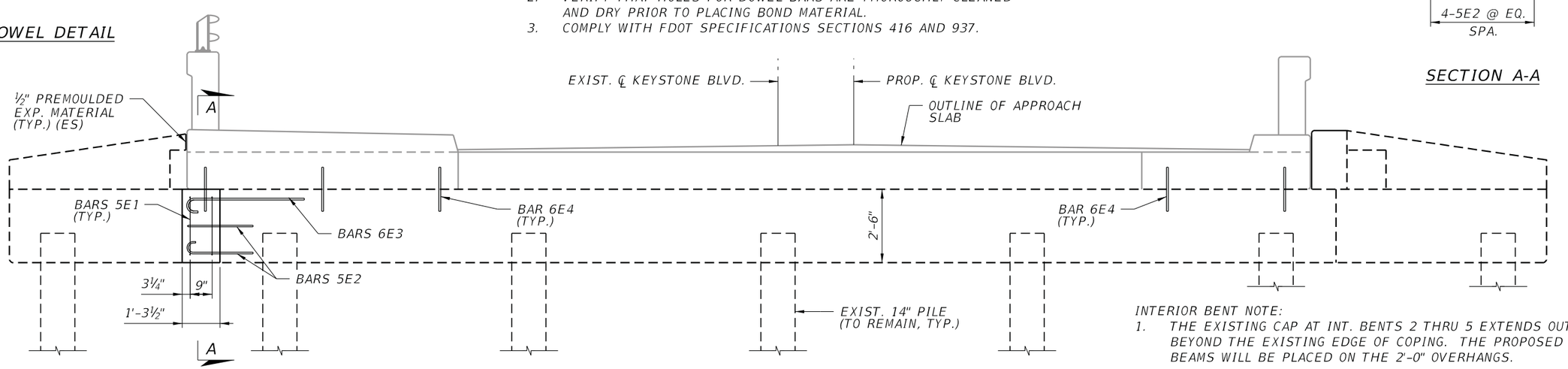

INTERIOR BENT NOTE:

1. THE EXISTING CAP AT INT. BENTS 2 THRU 5 EXTENDS OUT 2'-0" BEYOND THE EXISTING EDGE OF COPING. THE PROPOSED 2'-0" BEAMS WILL BE PLACED ON THE 2'-0" OVERHANGS.

ELEVATION

(LOOKING DOWNSTATION)
(END BENT 1 SHOWN, END BENT 6 SIMILAR)

Bridge No. 014056

NOTICE: THE OFFICIAL RECORD OF THIS SHEET IS THE ELECTRONIC FILE DIGITALLY SIGNED AND SEALED UNDER RULE 61G15-23.004, F.A.C.

REVISIONS					
DATE	BY	DESCRIPTION	DATE	BY	DESCRIPTION

KCI TECHNOLOGIES
ENGINEERS PLANNERS SCIENTISTS CONSTRUCTION MANAGERS
www.kci.com
KCI TECHNOLOGIES, INC.
4041 CRESCENT PARK DRIVE
TAMPA, FL 33578
PHONE: (813) 767-0538
ROLANDO CORSA, P.E. NO. 73191

DRAWN BY: JMV 2/23
CHECKED BY: AJS 2/23
DESIGNED BY: JMV 2/23
CHECKED BY: RC 2/23

CHARLOTTE COUNTY PUBLIC WORKS

ROAD NO.	COUNTY	PROJECT NUMBER
N/A	CHARLOTTE	N/A

SHEET TITLE: END BENTS 1 AND 6

PROJECT NAME: SOUTH GULF COVE BRIDGE REPAIRS

REF. DWG. NO.

SHEET NO. B-10

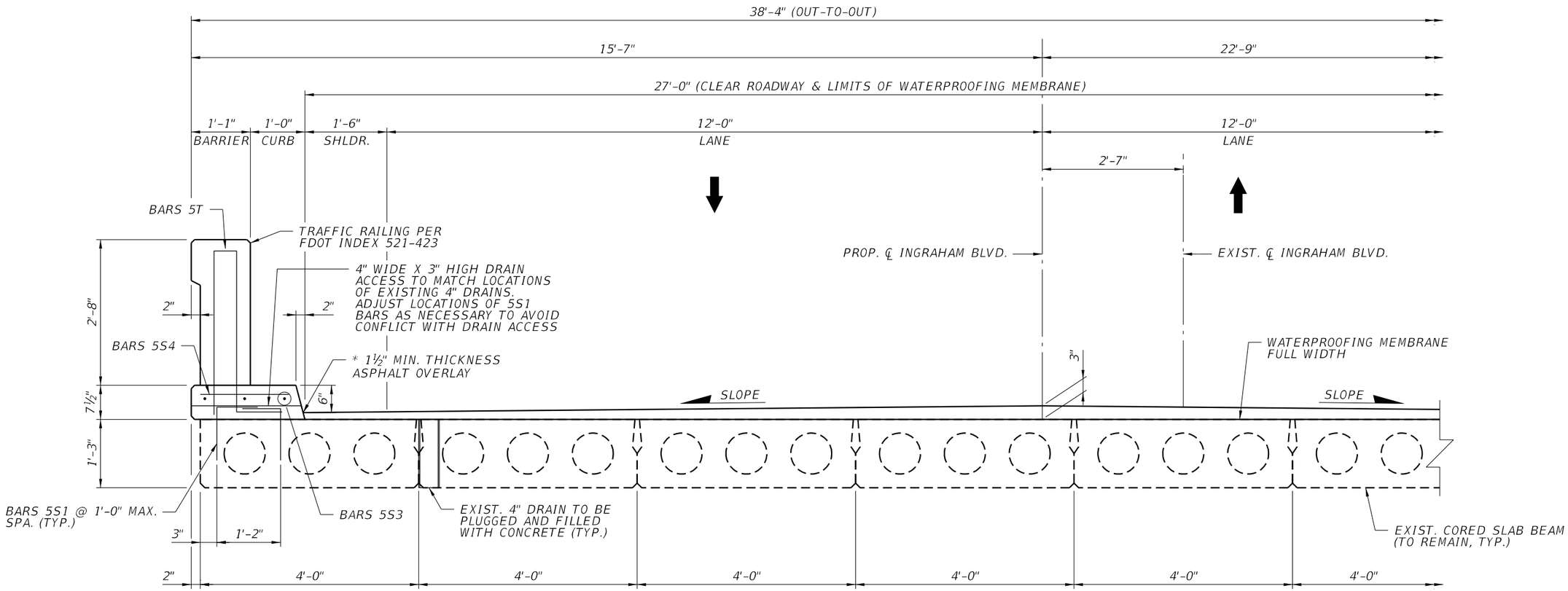

* DISH ASPHALT AT DRAIN LOCATIONS TO ALLOW FULL OPENING OF 4" X 3" DRAIN SLOTS

PARTIAL TYPICAL SECTION

(LOOKING UPSTATION)

NOTES:

1. DOWEL EMBEDMENT FOR BARS 5S1 SHALL BE 9". AN ADHESIVE BONDING MATERIAL FOR STRUCTURAL APPLICATIONS SHALL BE USED THAT COMPLIES WITH FDOT SPECIFICATIONS SECTIONS 416 AND 937. THE DOWEL HOLE SHALL BE PER THE MANUFACTURER'S RECOMMENDATIONS.
2. BARS 5S1 MAY BE ROTATED AS NECESSARY TO AVOID CONFLICTS.
3. EXISTING 6" FM NOT SHOWN FOR CLARITY.

Bridge No. 014056

REVISIONS					
DATE	BY	DESCRIPTION	DATE	BY	DESCRIPTION

KCI TECHNOLOGIES
ENGINEERS PLANNERS SCIENTISTS CONSTRUCTION MANAGERS
www.kci.com
KCI TECHNOLOGIES, INC.
4041 CRESCENT PARK DRIVE
TAMPA, FL 33578
PHONE: (813) 767-0538
ROLANDO CORSA, P.E. NO. 73191

DRAWN BY: JMV 2/23
CHECKED BY: AJS 2/23
DESIGNED BY: JMV 2/23
CHECKED BY: RC 2/23

CHARLOTTE COUNTY PUBLIC WORKS

ROAD NO.	COUNTY	PROJECT NUMBER
N/A	CHARLOTTE	N/A

SHEET TITLE: TYPICAL SECTION (1 OF 2)

PROJECT NAME: SOUTH GULF COVE BRIDGE REPAIRS

REF. DWG. NO.

SHEET NO. B-11

NOTICE: THE OFFICIAL RECORD OF THIS SHEET IS THE ELECTRONIC FILE DIGITALLY SIGNED AND SEALED UNDER RULE 61G15-23.004, F.A.C.

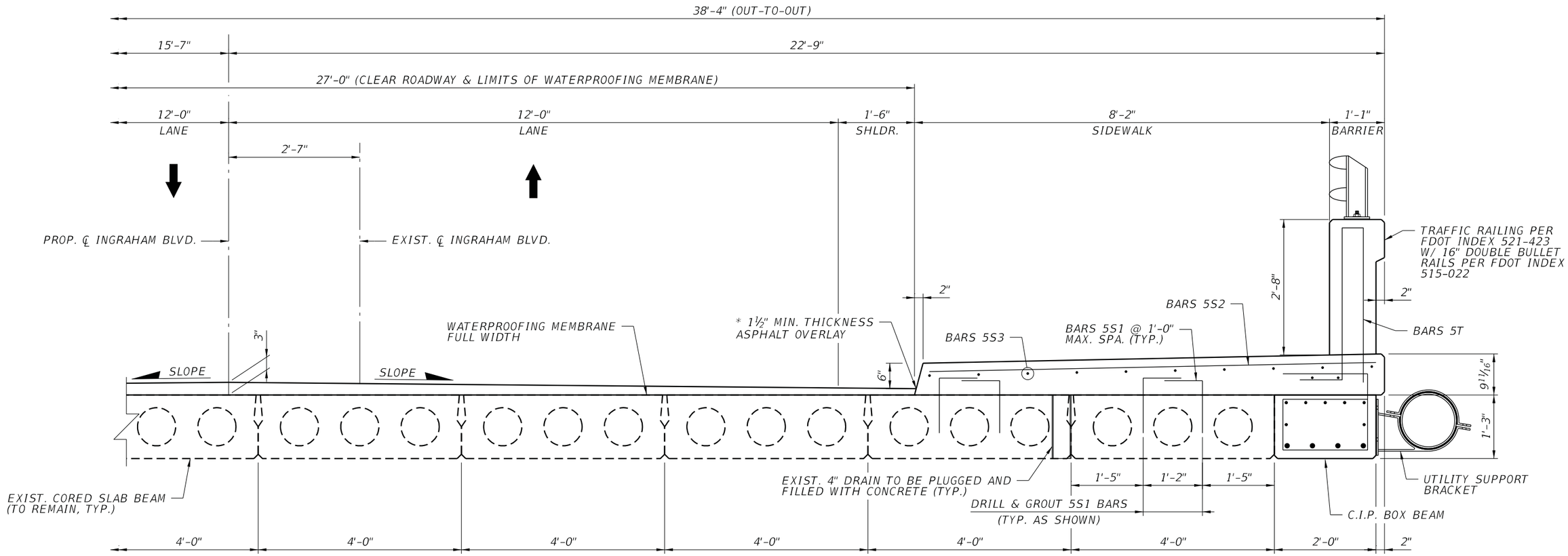

PARTIAL TYPICAL SECTION

(LOOKING UPSTATION)

NOTES:

1. DOWEL EMBEDMENT FOR BARS 5S1 SHALL BE 9". AN ADHESIVE BONDING MATERIAL FOR STRUCTURAL APPLICATIONS SHALL BE USED THAT COMPLIES WITH FDOT SPECIFICATIONS SECTIONS 416 AND 937. THE DOWEL HOLE SHALL BE PER THE MANUFACTURER'S RECOMMENDATIONS.
2. BARS 5S1 MAY BE ROTATED AS NECESSARY TO AVOID CONFLICTS.
3. SEE SHEET 15 FOR CAST-IN-PLACE CONCRETE BEAM DETAILS.
4. SEE SHEET 19 FOR UTILITY SUPPORT DETAILS.
5. ANY DAMAGE TO EXISTING PRECAST BEAMS, REINFORCING STEEL OR PRESTRESSING STRANDS SHALL BE REPAIRED TO THE SATISFACTION OF THE COUNTY AT THE SOLE EXPENSE OF THE CONTRACTOR.

Bridge No. 014056

REVISIONS					
DATE	BY	DESCRIPTION	DATE	BY	DESCRIPTION

KCI TECHNOLOGIES
ENGINEERS PLANNERS SCIENTISTS CONSTRUCTION MANAGERS
www.kci.com
KCI TECHNOLOGIES, INC.
4041 CRESCENT PARK DRIVE
TAMPA, FL 33578
PHONE: (813) 767-0538
ROLANDO CORSA, P.E. NO. 73191

DRAWN BY: JMV 2/23
CHECKED BY: AJS 2/23
DESIGNED BY: JMV 2/23
CHECKED BY: RC 2/23

CHARLOTTE COUNTY PUBLIC WORKS

ROAD NO.	COUNTY	PROJECT NUMBER
N/A	CHARLOTTE	N/A

SHEET TITLE: TYPICAL SECTION (2 OF 2)

PROJECT NAME: SOUTH GULF COVE BRIDGE REPAIRS

REF. DWG. NO.

SHEET NO. B-12

NOTICE: THE OFFICIAL RECORD OF THIS SHEET IS THE ELECTRONIC FILE DIGITALLY SIGNED AND SEALED UNDER RULE 61G15-23.004, F.A.C.

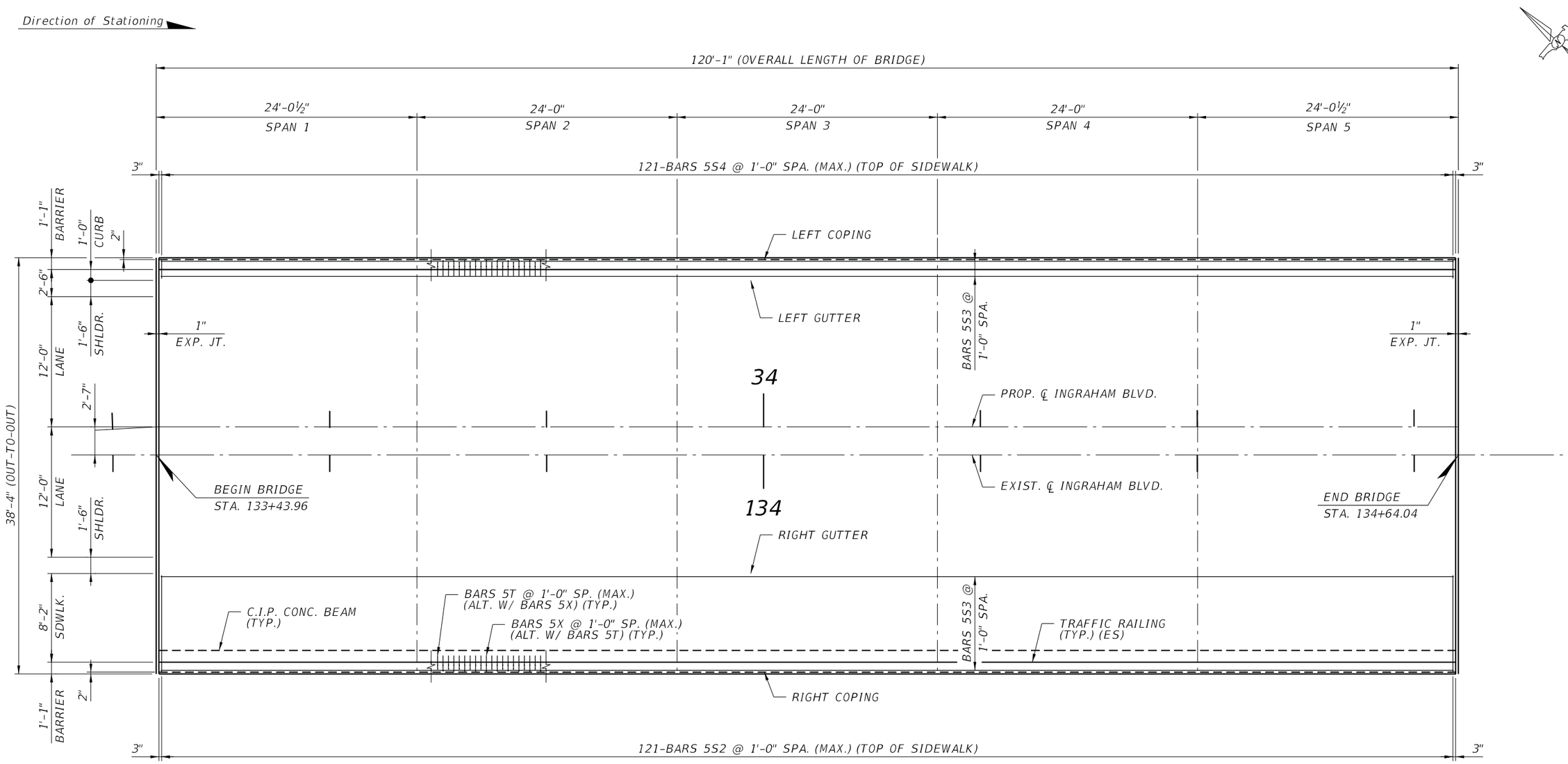

SUPERSTRUCTURE PLAN

NOTES:

1. ALLOWABLE REBAR SPLICE LENGTHS AS FOLLOWS:
   #4 = 2'-5"
   #5 = 3'-0"
   #9 = 6'-6"

Bridge No. 014056

REVISIONS					
DATE	BY	DESCRIPTION	DATE	BY	DESCRIPTION

ENGINEERS PLANNERS SCIENTISTS CONSTRUCTION MANAGERS
KCI TECHNOLOGIES www.kci.com
KCI TECHNOLOGIES, INC.
4041 CRESCENT PARK DRIVE
TAMPA, FL 33578
PHONE: (813) 767-0538
ROLANDO CORSA, P.E. NO. 73191

DRAWN BY: JMV 2/23
CHECKED BY: AJS 2/23
DESIGNED BY: JMV 2/23
CHECKED BY: RC 2/23

CHARLOTTE COUNTY PUBLIC WORKS

ROAD NO.	COUNTY	PROJECT NUMBER
N/A	CHARLOTTE	N/A

SHEET TITLE: SUPERSTRUCTURE

PROJECT NAME: SOUTH GULF COVE BRIDGE REPAIRS

REF. DWG. NO.

SHEET NO. B-13

NOTICE: THE OFFICIAL RECORD OF THIS SHEET IS THE ELECTRONIC FILE DIGITALLY SIGNED AND SEALED UNDER RULE 61G15-23.004, F.A.C.

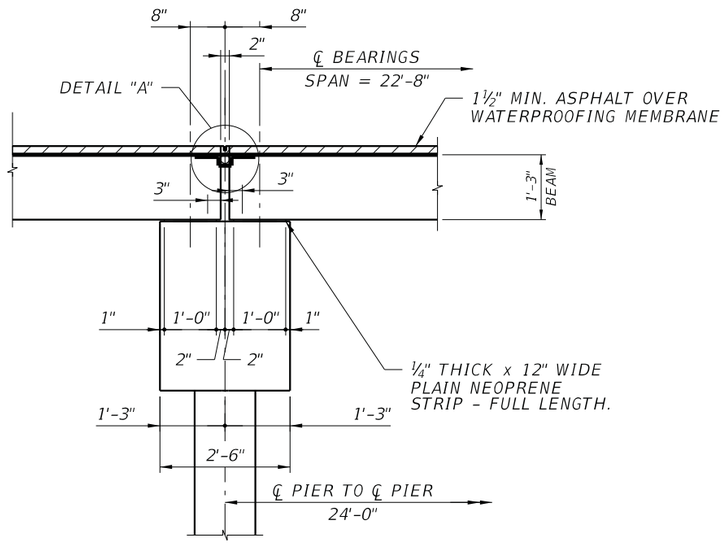

SECTION A-A

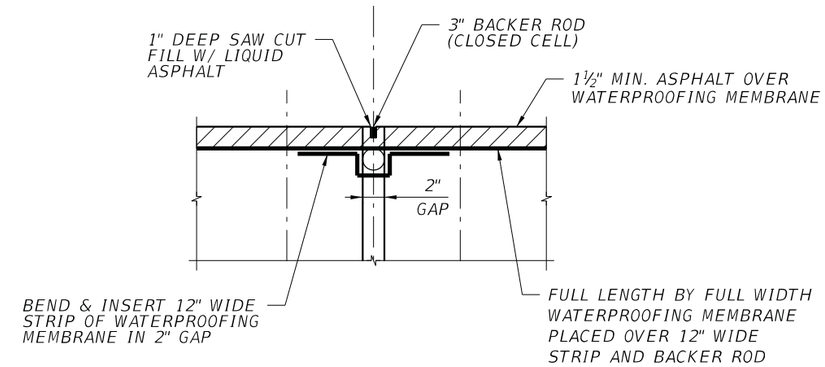

DETAIL "A"

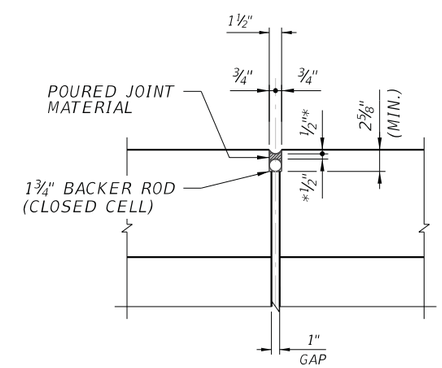

SIDEWALK EXPANSION JOINT DETAIL

* ½" OR PER MANUFACTURER'S RECOMMENDATIONS, WHICHEVER IS GREATER

Bridge No. 014056

REVISIONS					
DATE	BY	DESCRIPTION	DATE	BY	DESCRIPTION

KCI TECHNOLOGIES
Engineers
Planners
Scientists
Construction Managers
www.kci.com

KCI TECHNOLOGIES, INC.
4041 CRESCENT PARK DRIVE
TAMPA, FL 33578
PHONE: (813) 767-0538
ROLANDO CORSA, P.E. NO. 73191

DRAWN BY: JMV 2/23
CHECKED BY: AJS 2/23
DESIGNED BY: JMV 2/23
CHECKED BY: RC 2/23

CHARLOTTE COUNTY PUBLIC WORKS

ROAD NO.	COUNTY	PROJECT NUMBER
N/A	CHARLOTTE	N/A

SHEET TITLE: SUPERSTRUCTURE REPAIR DETAILS

PROJECT NAME: SOUTH GULF COVE BRIDGE REPAIRS

REF. DWG. NO.

SHEET NO. B-14

NOTICE: THE OFFICIAL RECORD OF THIS SHEET IS THE ELECTRONIC FILE DIGITALLY SIGNED AND SEALED UNDER RULE 61G15-23.004, F.A.C.

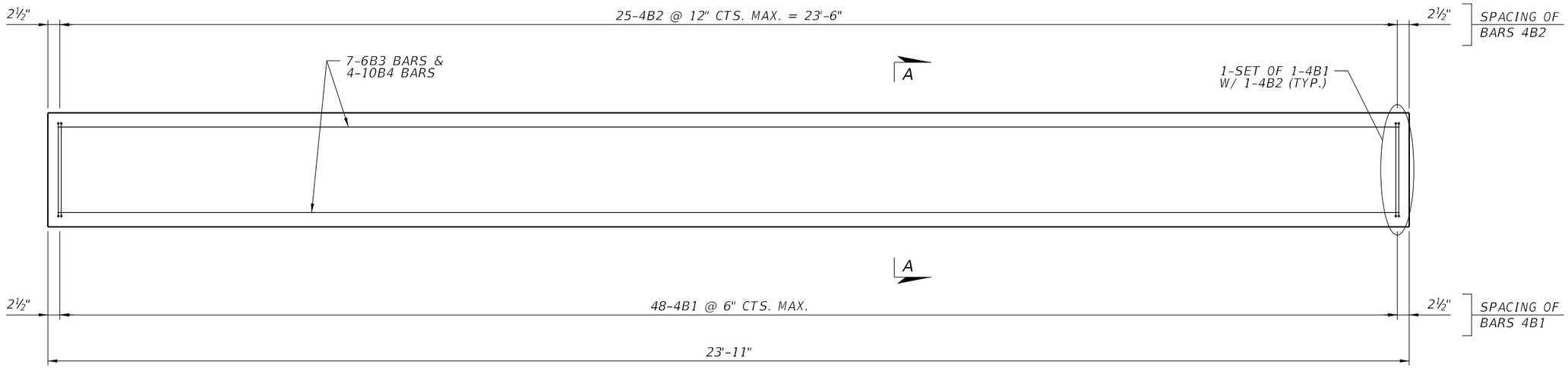

PLAN

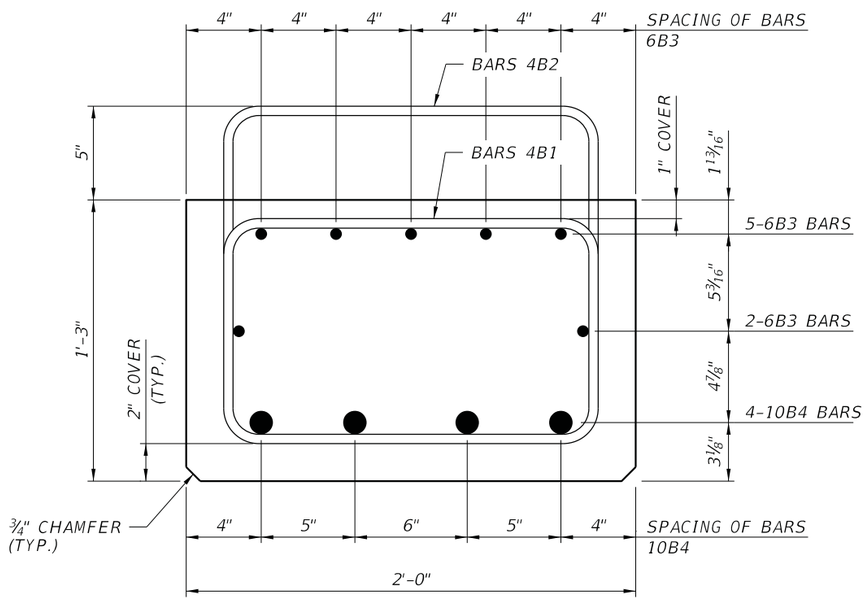

SECTION A-A

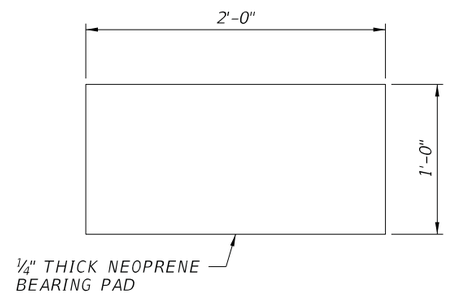

NEOPRENE BEARING PAD
(50 DUROMETER HARDNESS)

NOTES:
1. REINFORCEMENT BARS SHALL CONFORM TO THE REQUIREMENTS OF AASHTO A615, GRADE 60.
2. COST OF ALL ITEMS EMBEDDED IN BEAMS AS WELL AS THE NEOPRENE BEARING PADS SHALL BE INCLUDED IN THE PRICE OF THE C.I.P. FLAT SLAB BEAMS.
3. CONTRACTOR HAS THE OPTION TO PRECAST THE BEAMS PER THE DESIGN SHOWN ON THIS SHEET IN LIEU OF CASTING THE BEAMS IN PLACE. NO ADDITIONAL COMPENSATION WILL BE GIVEN FOR PRECAST BEAMS.

BILL OF MATERIAL (ONE BEAM)

BAR	NO.	SIZE	TYPE	A	B	C	G	LENGTH
4B1	48	#4	4	4½"	1'-0"	1'-8"	4½"	6'-1"
4B2	25	#4	4	4½"	1'-6"	1'-8"	4½"	7'-1"
6B3	7	#6	1		23'-7"			23'-7"
10B4	4	#10	1		23'-7"			23'-7"
REBAR TOTAL							LB	967
TOTAL BEAM LENGTH							LF	24.0
CLASS II CONCRETE (4,500 PSI)							CY	2.2

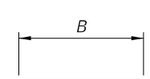

TYPE 1

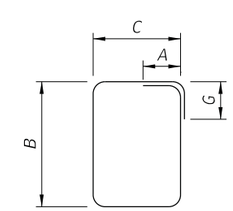

TYPE 4

Bridge No. 014056

NOTICE: THE OFFICIAL RECORD OF THIS SHEET IS THE ELECTRONIC FILE DIGITALLY SIGNED AND SEALED UNDER RULE 61G15-23.004, F.A.C.

REVISIONS

DATE	BY	DESCRIPTION	DATE	BY	DESCRIPTION

ENGINEERS PLANNERS SCIENTISTS CONSTRUCTION MANAGERS
KCI TECHNOLOGIES www.kci.com
KCI TECHNOLOGIES, INC.
4041 CRESCENT PARK DRIVE
TAMPA, FL 33578
PHONE: (813) 767-0538
ROLANDO CORSA, P.E. NO. 73191

DRAWN BY: JMV 2/23
CHECKED BY: AJS 2/23
DESIGNED BY: JMV 2/23
CHECKED BY: RC 2/23

CHARLOTTE COUNTY PUBLIC WORKS

ROAD NO.	COUNTY	PROJECT NUMBER
N/A	CHARLOTTE	N/A

SHEET TITLE: CAST-IN-PLACE CONCRETE BEAMS

PROJECT NAME: SOUTH GULF COVE BRIDGE REPAIRS

REF. DWG. NO.

SHEET NO. B-15

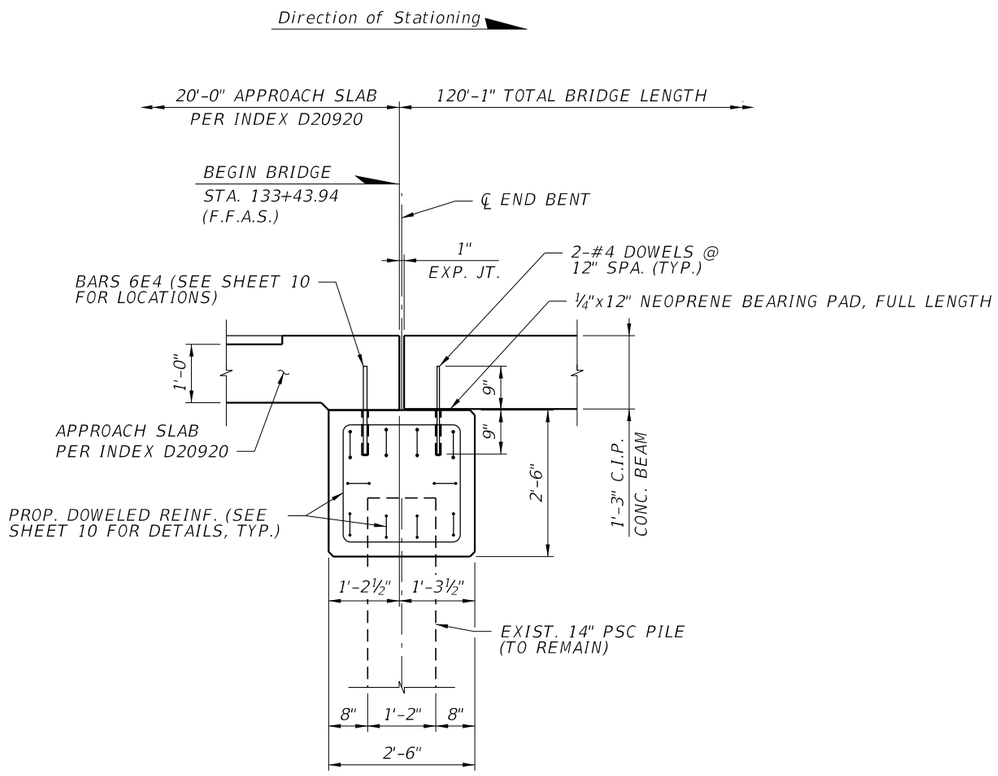

END BENT DETAIL

(END BENT 1 SHOWN, END BENT 6 OPPOSITE HAND)

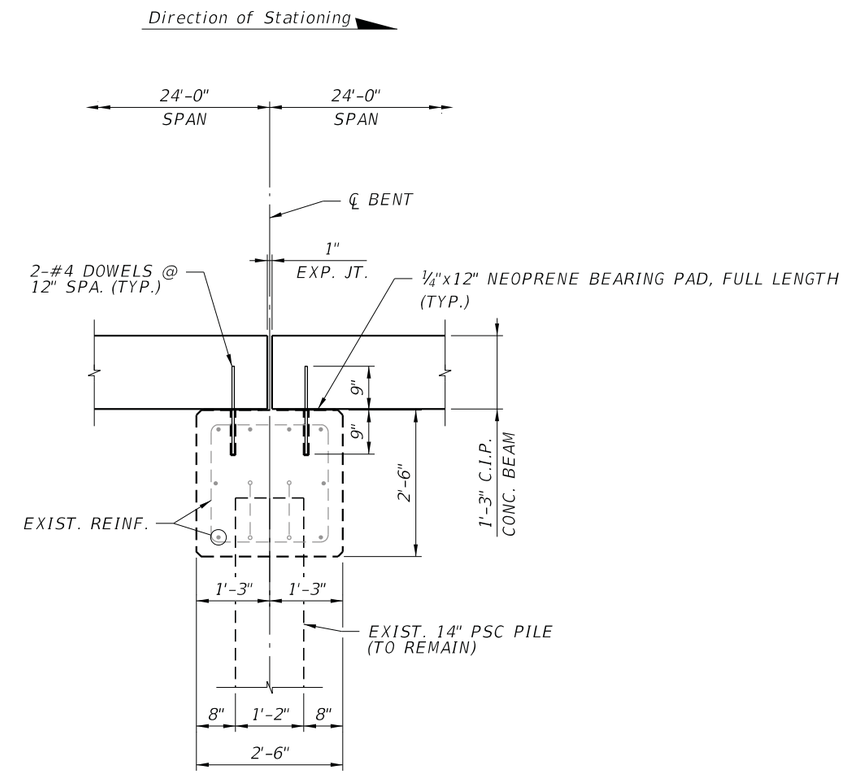

INTERIOR BENT DETAIL

(BENTS 2 THRU 5)

NOTES:

1. DOWEL EMBEDMENT FOR #4 DOWELS SHALL BE 9". AN ADHESIVE BONDING MATERIAL FOR STRUCTURAL APPLICATIONS SHALL BE USED THAT COMPLIES WITH FDOT SPECIFICATIONS SECTIONS 416 AND 937. THE DOWEL HOLE SHALL BE PER THE MANUFACTURER'S RECOMMENDATIONS.

Bridge No. 014056

NOTICE: THE OFFICIAL RECORD OF THIS SHEET IS THE ELECTRONIC FILE DIGITALLY SIGNED AND SEALED UNDER RULE 61G15-23.004, F.A.C.

REVISIONS

DATE	BY	DESCRIPTION	DATE	BY	DESCRIPTION

KCI TECHNOLOGIES
ENGINEERS
PLANNERS
SCIENTISTS
CONSTRUCTION MANAGERS
www.kci.com

KCI TECHNOLOGIES, INC.
4041 CRESCENT PARK DRIVE
TAMPA, FL 33578
PHONE: (813) 767-0538
ROLANDO CORSA, P.E. NO. 73191

DRAWN BY: JMV 2/23
CHECKED BY: AJS 2/23
DESIGNED BY: JMV 2/23
CHECKED BY: RC 2/23

CHARLOTTE COUNTY PUBLIC WORKS

ROAD NO.	COUNTY	PROJECT NUMBER
N/A	CHARLOTTE	N/A

SHEET TITLE: SUBSTRUCTURE DETAILS

PROJECT NAME: SOUTH GULF COVE BRIDGE REPAIRS

REF. DWG. NO.

SHEET NO. B-16

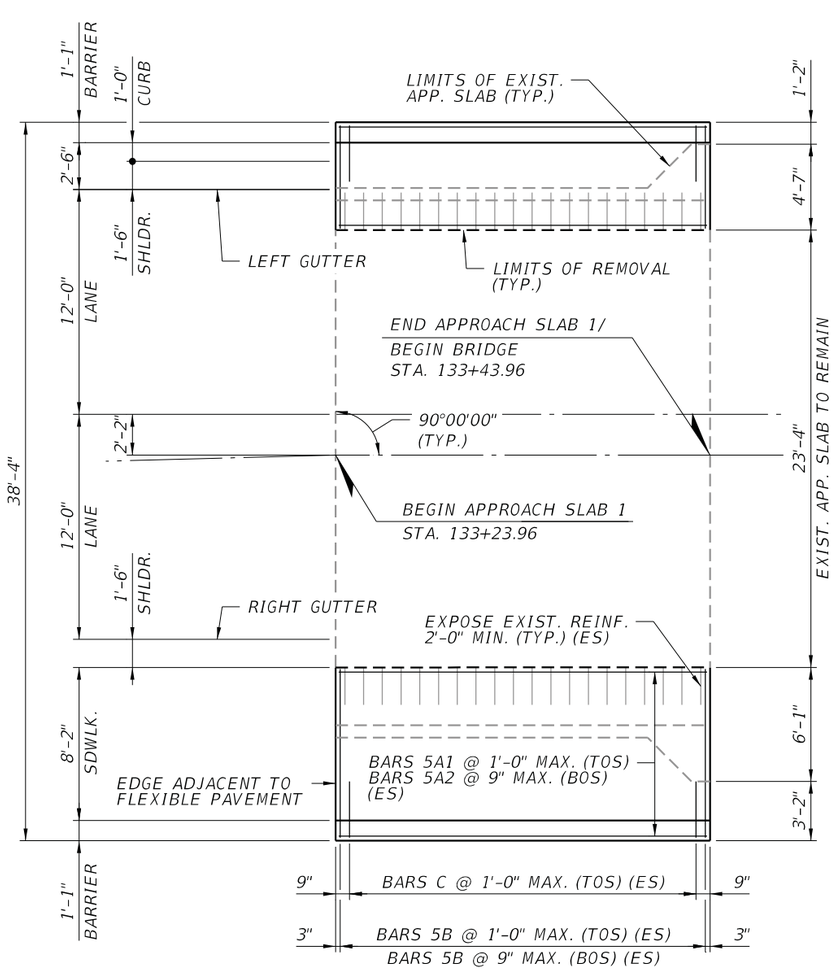

APPROACH SLAB 1

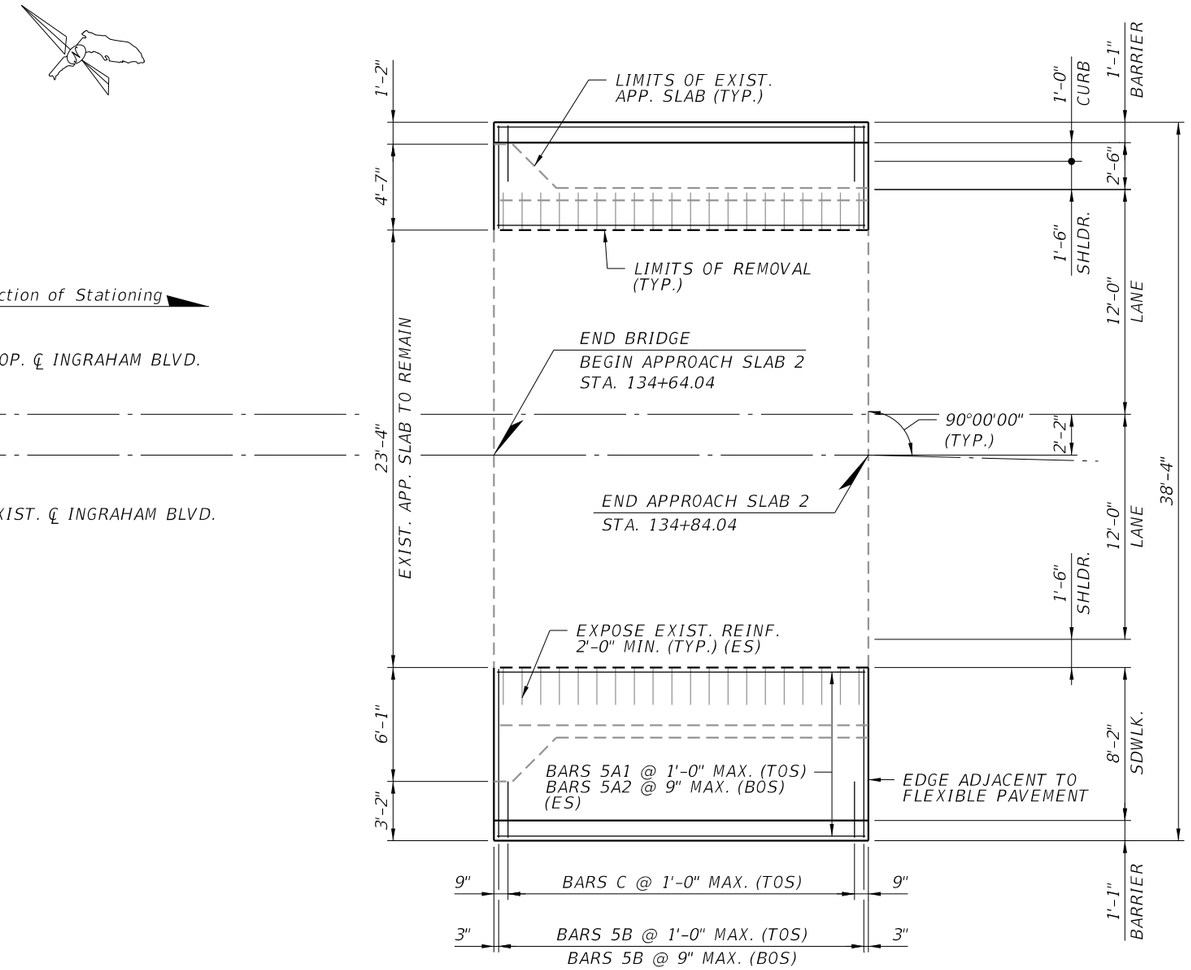

APPROACH SLAB 2

LEGEND:
BOS = BOTTOM OF SLAB
TOP = TOP OF SLAB
ES = EACH SIDE

Bridge No. 014056

REVISIONS					
DATE	BY	DESCRIPTION	DATE	BY	DESCRIPTION

KCI TECHNOLOGIES www.kci.com
Engineers Planners Scientists Construction Managers

KCI TECHNOLOGIES, INC.
4041 CRESCENT PARK DRIVE
TAMPA, FL 33578
PHONE: (813) 767-0538
ROLANDO CORSA, P.E. NO. 73191

DRAWN BY: JMV 2/23
CHECKED BY: AJS 2/23
DESIGNED BY: JMV 2/23
CHECKED BY: RC 2/23

CHARLOTTE COUNTY PUBLIC WORKS

ROAD NO.	COUNTY	PROJECT NUMBER
N/A	CHARLOTTE	N/A

SHEET TITLE: APPROACH SLAB DETAILS (1 OF 2)

PROJECT NAME: SOUTH GULF COVE BRIDGE REPAIRS

REF. DWG. NO.

SHEET NO. B-17

NOTICE: THE OFFICIAL RECORD OF THIS SHEET IS THE ELECTRONIC FILE DIGITALLY SIGNED AND SEALED UNDER RULE 61G15-23.004, F.A.C.

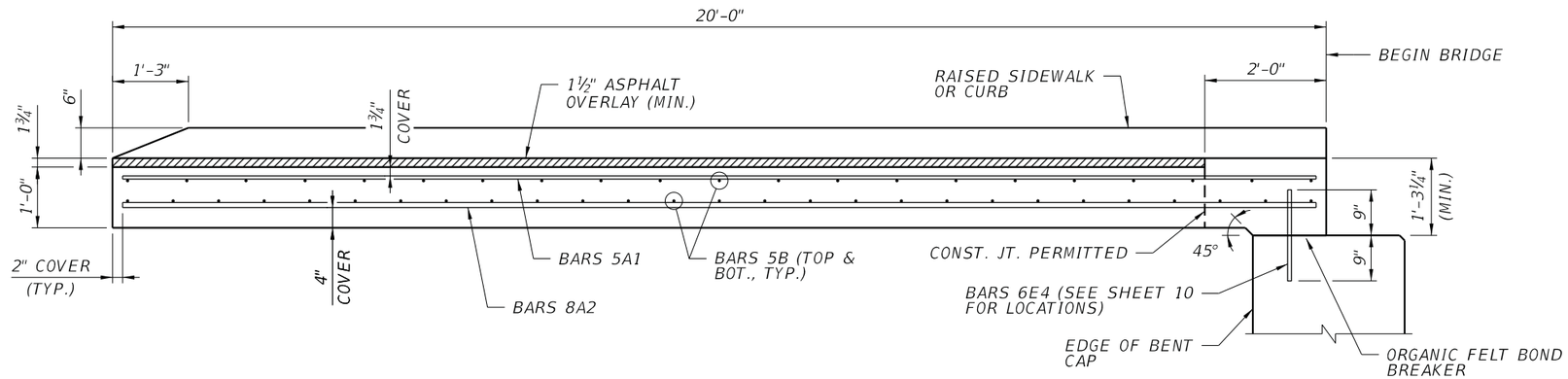

APPROACH SLAB SECTION

(APPROACH SLAB 1 SHOWN, APPROACH SLAB 2 SIMILAR)

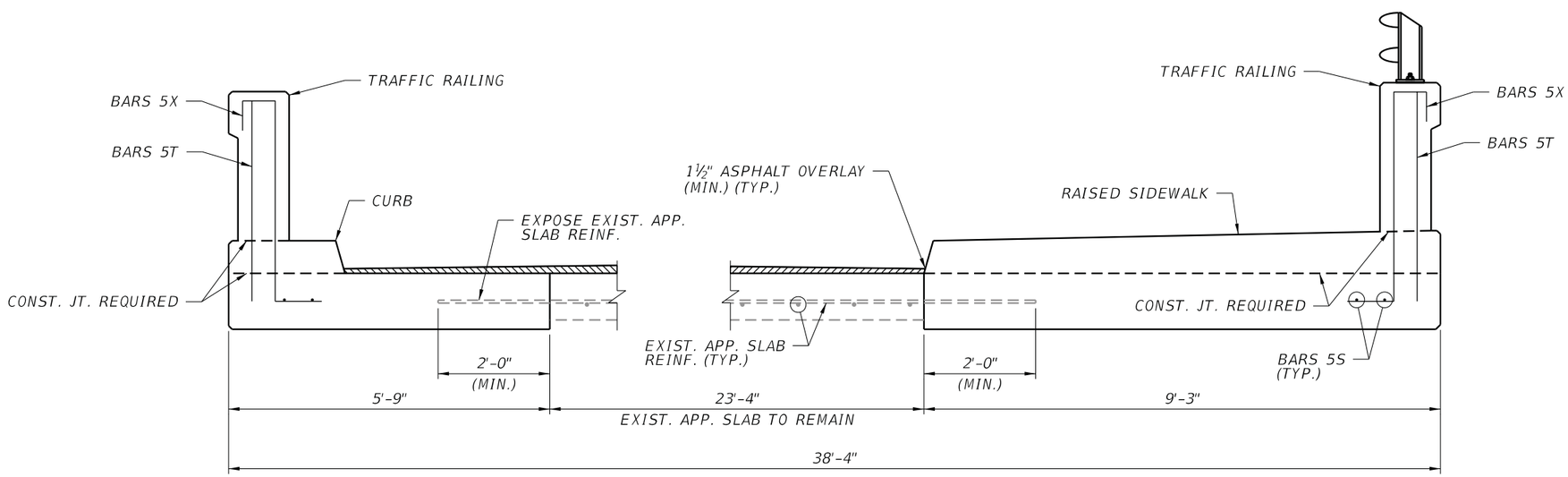

SIDEWALK SECTIONS

(LOOKING UPSTATION)

Bridge No. 014056

REVISIONS					
DATE	BY	DESCRIPTION	DATE	BY	DESCRIPTION

KCI TECHNOLOGIES — ENGINEERS, PLANNERS, SCIENTISTS, CONSTRUCTION MANAGERS — www.kci.com

KCI TECHNOLOGIES, INC.
4041 CRESCENT PARK DRIVE
TAMPA, FL 33578
PHONE: (813) 767-0538
ROLANDO CORSA, P.E. NO. 73191

DRAWN BY: JMV 2/23
CHECKED BY: AJS 2/23
DESIGNED BY: JMV 2/23
CHECKED BY: RC 2/23

CHARLOTTE COUNTY PUBLIC WORKS

ROAD NO.	COUNTY	PROJECT NUMBER
N/A	CHARLOTTE	N/A

SHEET TITLE: APPROACH SLAB DETAILS (2 OF 2)

PROJECT NAME: SOUTH GULF COVE BRIDGE REPAIRS

REF. DWG. NO.

SHEET NO. B-18

NOTICE: THE OFFICIAL RECORD OF THIS SHEET IS THE ELECTRONIC FILE DIGITALLY SIGNED AND SEALED UNDER RULE 61G15-23.004, F.A.C.

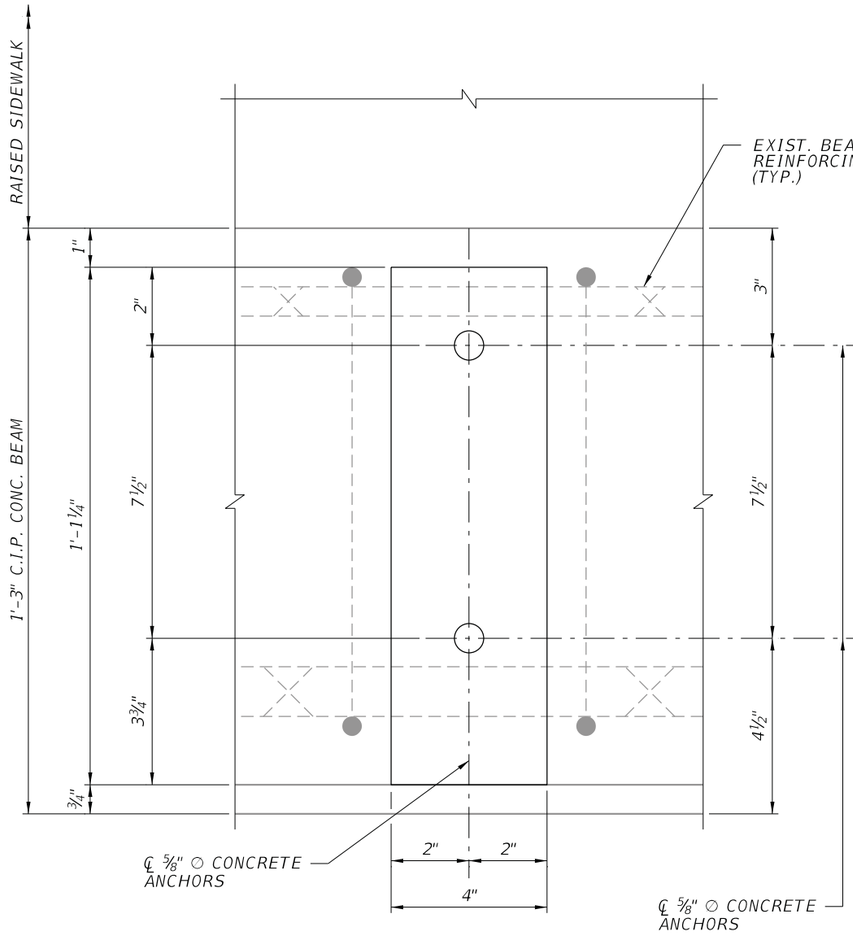

SECTION A-A

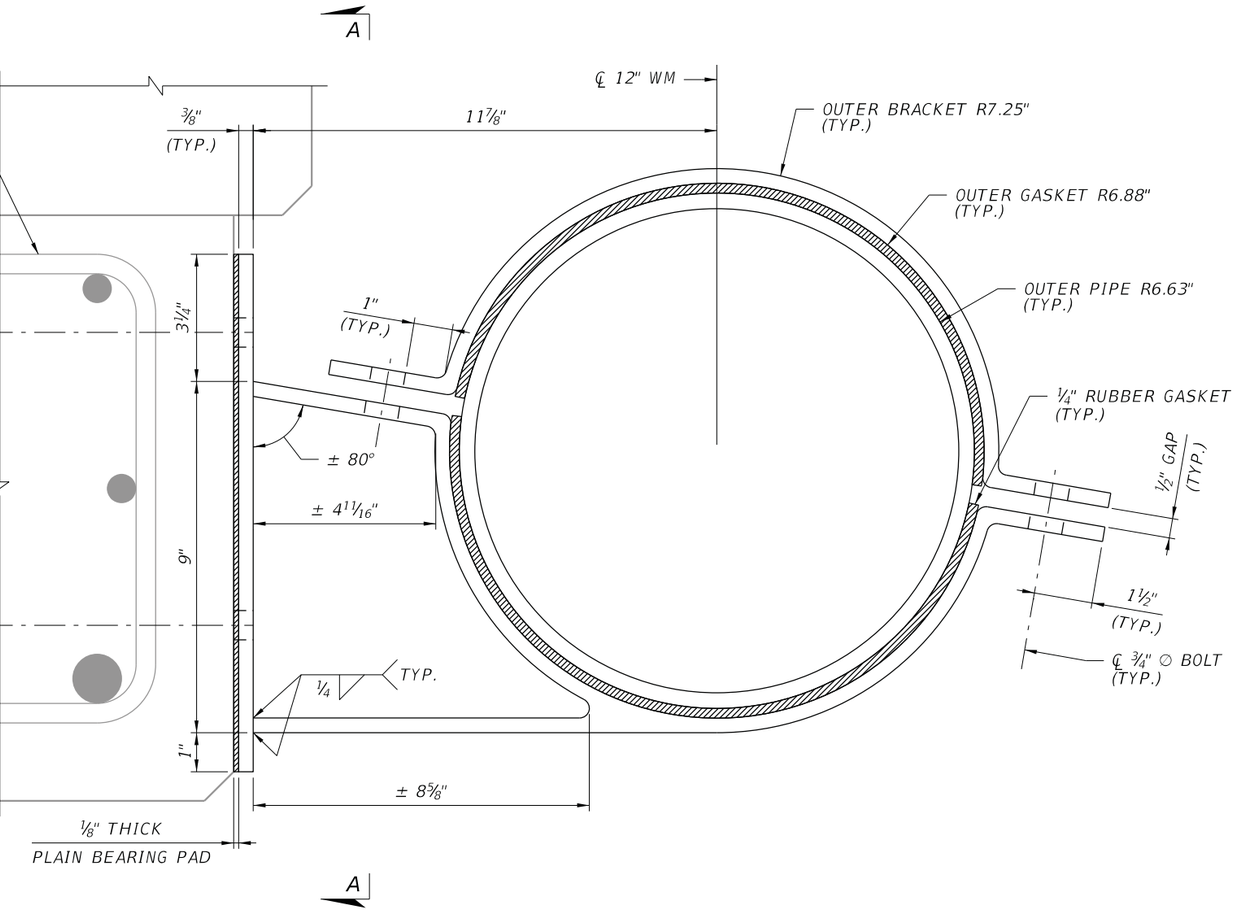

UTILITY SUPPORT BRACKET DETAILS

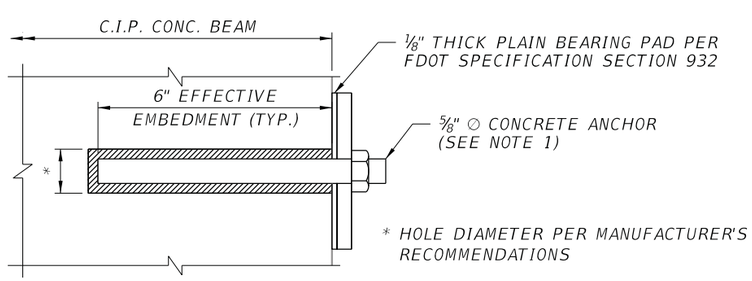

ANCHOR DETAIL

UTILITY SUPPORT BRACKET NOTES:

1. CONCRETE ANCHORS SHALL BE HILTI'S HIT-RE 500 V3 + HAS-R 316 SS ⅝" ∅ EPOXY ANCHORS, AND INSTALLED PER MANUFACTURER'S RECOMMENDATIONS.
2. STEEL PLATES SHALL BE ASTM A709, GRADE 36 AND GALVANIZED IN ACCORDANCE WITH ASTM A123.
3. WELD MATERIAL SHALL BE E70XX AND CONFORM TO AMERICAN WELDING SOCIETY STRUCTURAL WELDING CODE (STEEL) ANSI/AWS D1.1 (CURRENT EDITION).
4. SHIFT ANCHOR HOLE LOCATIONS IF EXISTING REINFORCING IS ENCOUNTERED. FILL UNUSED DRILLED HOLES WITH EPOXY. ANCHOR HOLE SPACING IS NOT TO EXCEED 15'-0".
5. VERIFY THAT HOLES FOR ANCHORS ARE THOROUGHLY CLEANED AND DRY PRIOR TO PLACING BOND MATERIAL.
6. COMPLY WITH FDOT SPECIFICATIONS SECTIONS 416 AND 937.

Bridge No. 014056

REVISIONS					
DATE	BY	DESCRIPTION	DATE	BY	DESCRIPTION

KCI TECHNOLOGIES
ENGINEERS PLANNERS SCIENTISTS CONSTRUCTION MANAGERS
www.kci.com
KCI TECHNOLOGIES, INC.
4041 CRESCENT PARK DRIVE
TAMPA, FL 33578
PHONE: (813) 767-0538
ROLANDO CORSA, P.E. NO. 73191

DRAWN BY: JMV 2/23
CHECKED BY: AJS 2/23
DESIGNED BY: JMV 2/23
CHECKED BY: RC 2/23

CHARLOTTE COUNTY PUBLIC WORKS

ROAD NO.	COUNTY	PROJECT NUMBER
N/A	CHARLOTTE	N/A

SHEET TITLE: UTILITY SUPPORT DETAILS

PROJECT NAME: SOUTH GULF COVE BRIDGE REPAIRS

REF. DWG. NO.

SHEET NO. B-19

NOTICE: THE OFFICIAL RECORD OF THIS SHEET IS THE ELECTRONIC FILE DIGITALLY SIGNED AND SEALED UNDER RULE 61G15-23.004, F.A.C.

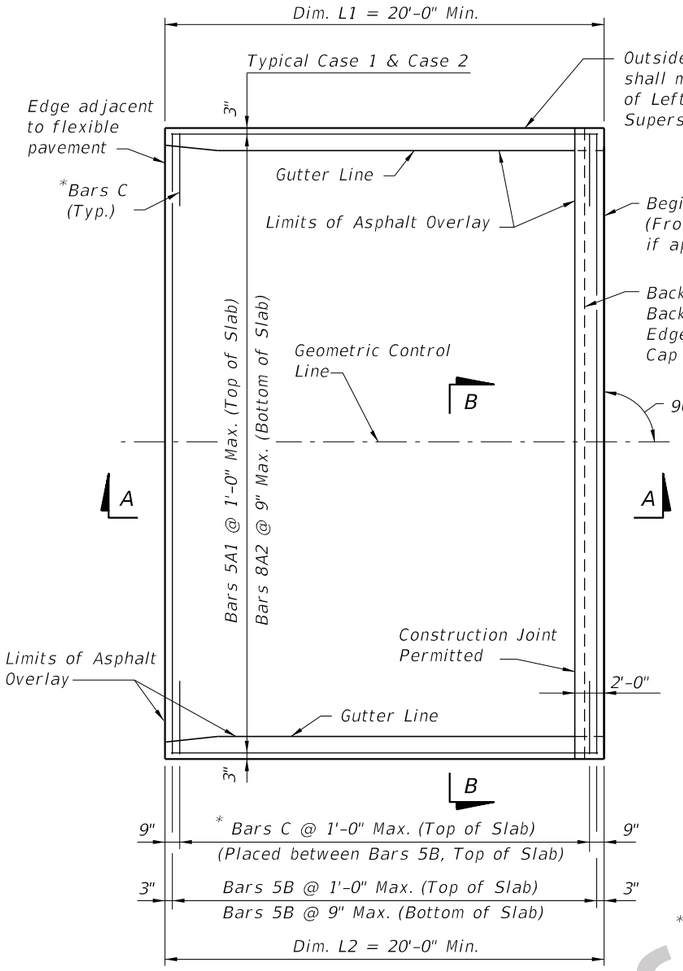

PLAN VIEW (CASE 1)

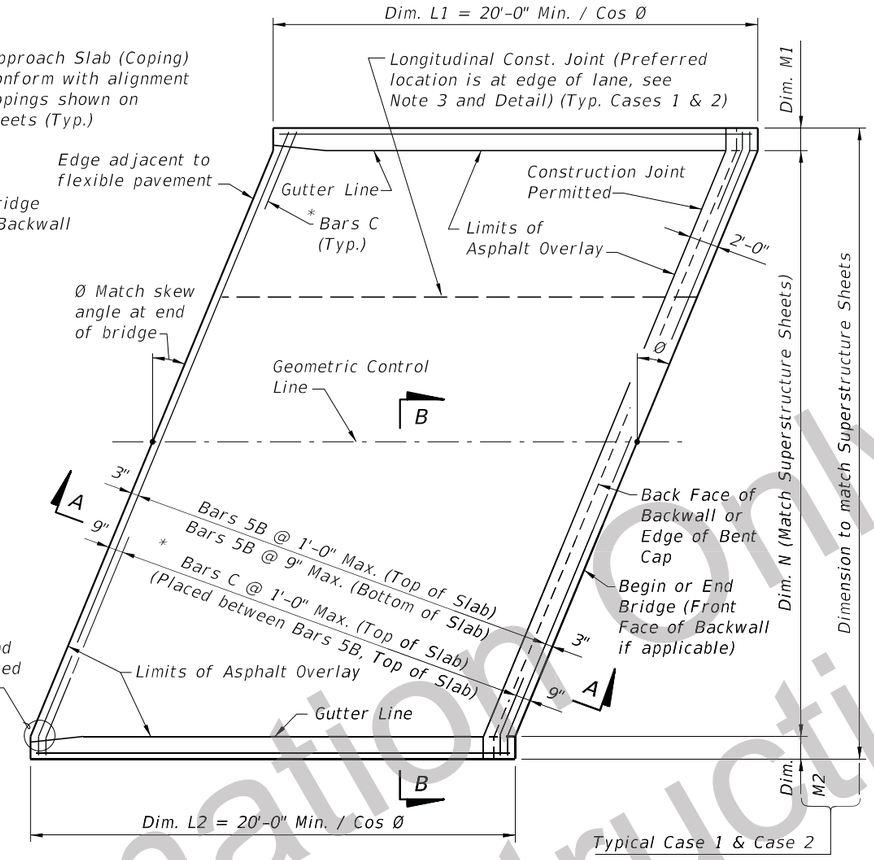

PLAN VIEW (CASE 2)

* NOTE: Bars C are required as shown when either a Traffic Railing or the Traffic Railing/Noise Wall are used at the edge of the Approach Slab.

GENERAL NOTES

1. SURFACE TREATMENT: As an option to Class 4 Floor Finish (Bridge Floor Grooving) per Section 400 a hand tined or heavy broomed finish may be permitted on the concrete portion of the riding surface. Sidewalk areas shall receive a broomed finish. The top surface of the concrete beneath the asphalt overlay shall be raked.
2. CONDUIT: If required, see Structure Plans for Conduit Details.
3. When a longitudinal construction joint is necessary or allowed by the Engineer, the transverse steel shall be extended as shown in the Longitudinal Construction Joint Detail.
4. The plan view for CASE 1 applies when the skew angle (Ø) = 0°. Relevant details also apply to CASE 2.
5. The plan view for CASE 2 applies where the skew angle (Ø) is > 0°. The slab shown represents a skew to the right for an approach slab at begin bridge; approach slab at the end of bridge or a left skew shall be treated similarly.
6. Welded Wire Reinforcement (WWR) for the edge of Approach Slabs on retaining walls is not included in the estimated quantity for reinforcing steel and is considered incidental to the work. WWR must consist of Deformed wire meeting the requirements of Specification Section 931.
7. Continue the asphalt pavement over the approach slab and match the friction course type used on the roadway. See the Roadway Plans for asphalt overlay and optional base details.
8. Approach slabs shown in Plan View Cases 1 and 2 represent a typical approach slab with edge barriers and no sidewalks. Provide railings, parapets and raised sidewalks as detailed in the Contract Plans.

CROSS REFERENCES:

For Section B-B, Longitudinal Construction Joint Detail and Approach Slab Details see Sheet 2.

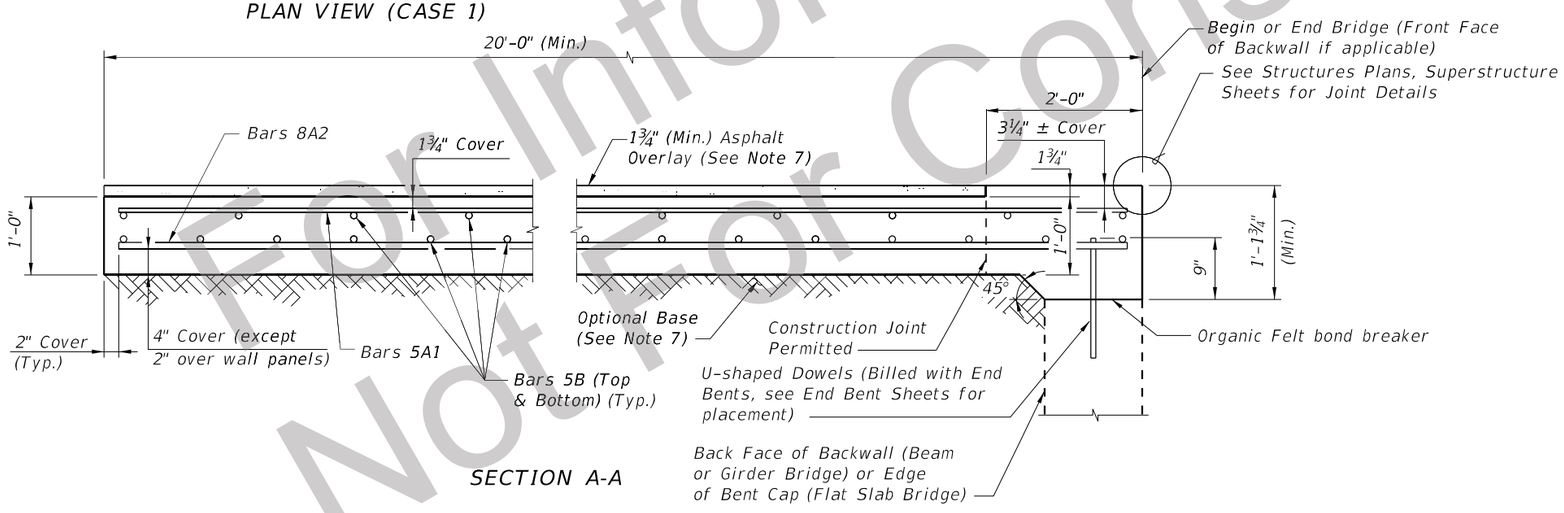

SECTION A-A

For Information Only
Not For Construction

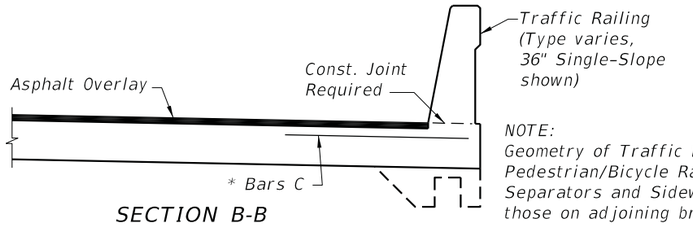

NOTE:
Geometry of Traffic Railings, Pedestrian/Bicycle Railings, Traffic Separators and Sidewalks to match those on adjoining bridge.

SECTION B-B
STANDARD APPROACH SLAB

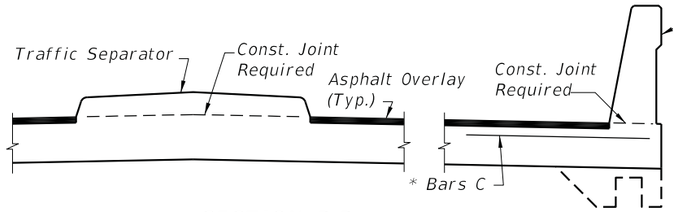

SECTION B-B
APPROACH SLAB WITH TRAFFIC SEPARATOR

*NOTE: Bars C are required as shown when the 36" or 42" Single-Slope Traffic Railing, or the Traffic Railing/Noise Wall, are used at the edge of the Approach Slab.

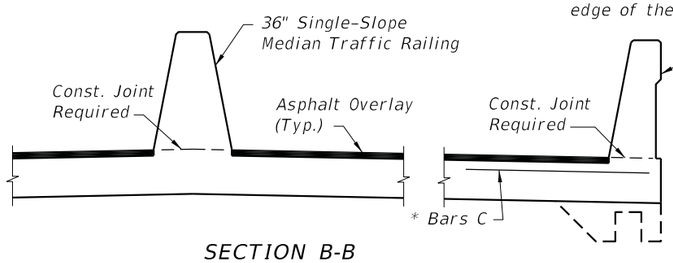

SECTION B-B
APPROACH SLAB WITH MEDIAN TRAFFIC RAILING

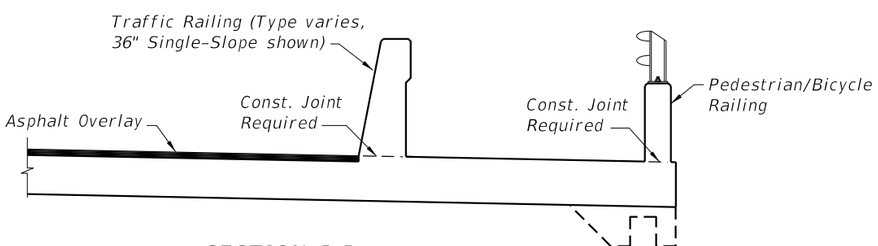

SECTION B-B
APPROACH SLAB WITH SIDEWALK

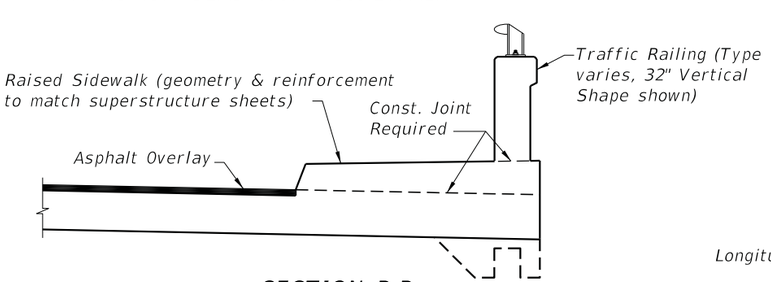

SECTION B-B
APPROACH SLAB WITH RAISED SIDEWALK

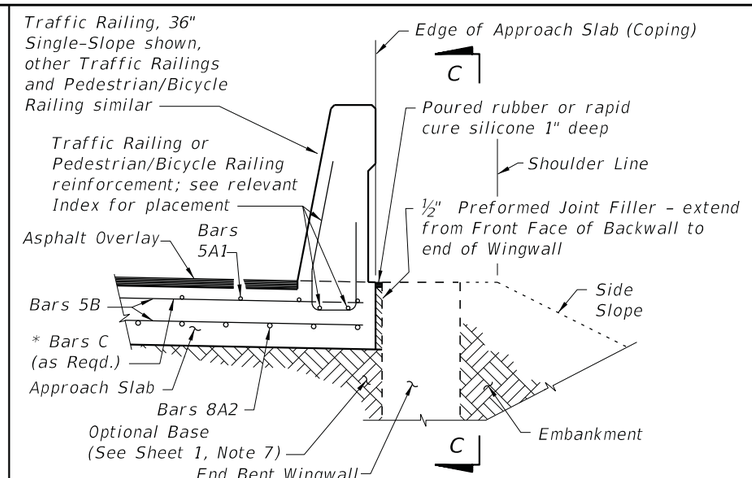

SECTION THRU APPROACH SLAB
AND END BENT WINGWALL

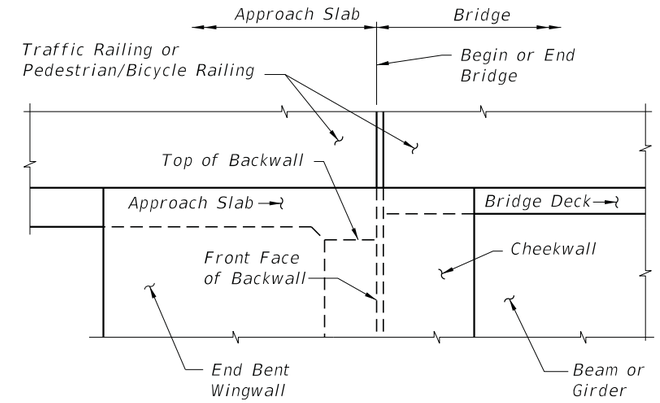

VIEW C-C AT BEGIN OR END BRIDGE (BEAM BRIDGE SHOWN, FLAT SLAB BRIDGE SIMILAR)

APPROACH SLAB WITH WINGWALL DETAILS

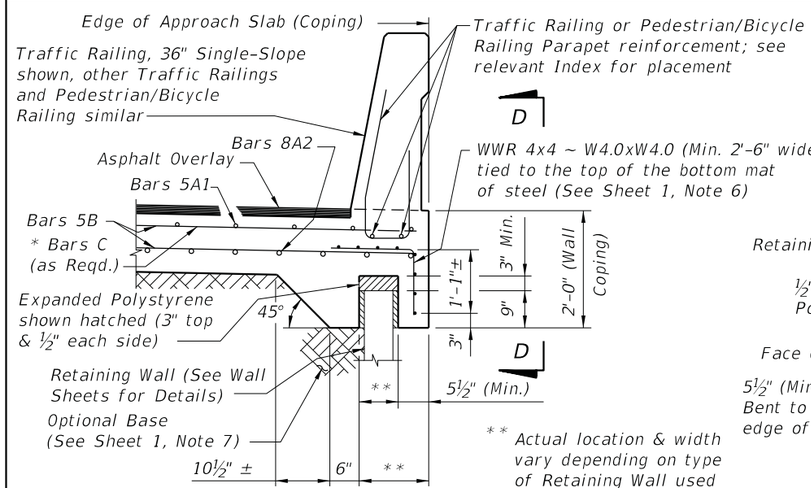

SECTION THRU APPROACH SLAB
AND RETAINING WALL

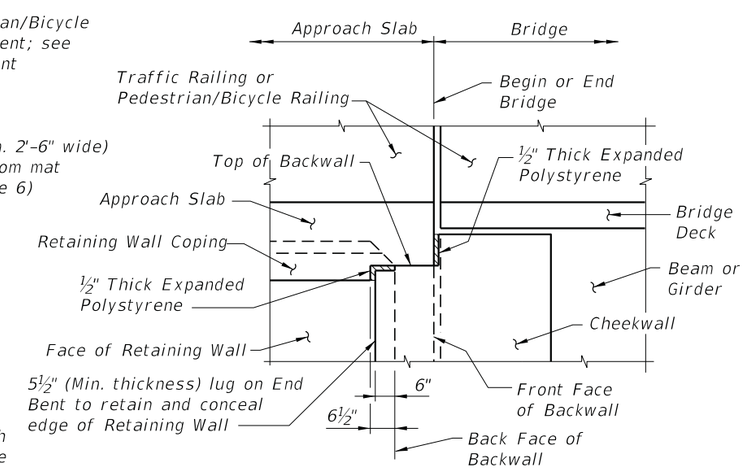

VIEW D-D AT BEGIN OR END BRIDGE (BEAM BRIDGE SHOWN, FLAT SLAB BRIDGE SIMILAR)

APPROACH SLAB WITH RETAINING WALL DETAILS

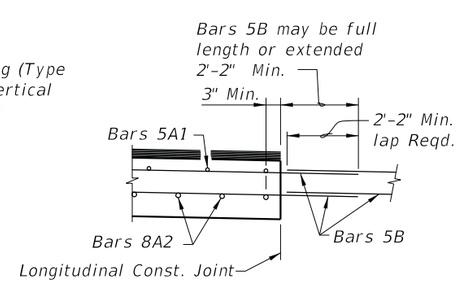

LONGITUDINAL CONSTRUCTION
JOINT DETAIL

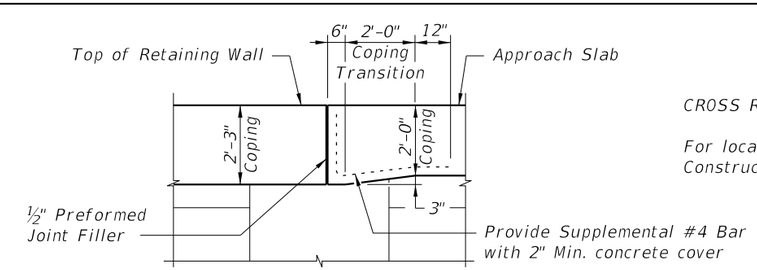

COPING TRANSITION DETAIL FOR
RETAINING WALLS WITH 2'-3" COPING HEIGHT
(Railing Not Shown For Clarity)

CROSS REFERENCES:

For location of Section B-B and Longitudinal Construction Joint see Sheet 1.

$TIMES

$DATES

LAST REVISION	REVISION	DESCRIPTION:			INDEX	SHEET
05/01/18			FDOT DEVELOPMENTAL STANDARD PLANS	APPROACH SLABS (20 FT.) (FLEXIBLE PAVEMENT APPROACHES)	D400-092	2 of 2

SHEET	TABLE OF CONTENTS
1	General Notes, TTC Tables
2	Definitions Temporary Traffic Control Devices Overhead Work Railroads Sight Distance Above Ground Hazard
3	Clear Zone Widths For Work Zones Superelevation Length Of Lane Closures Overweight/Oversize Vehicles Lane Widths High-Visibility Safety Apparel Speed Reduction Signing
4	Flagger Control Survey Work Zones Signs
5	Work Zone Sign Supports
6	Commonly Used Warning and Regulatory Signs In Work Zones
7	Manholes/Crosswalks/Joints Truck Mounted Attenuators Signals Channelizing Devices Channelizing Devices Consistency Advanced Warning Arrow Boards
8	Drop-Offs In Work Zones
9	Business Entrance Temporary Asphalt Separator
10	Channelizing Devices Notes Temporary Barrier Notes
11	Pavement Markings

GENERAL NOTES:

1. This Index contains information specific to the Federal and State guidelines and standards for the preparation of traffic control plans and for the execution of traffic control in work zones, for construction and maintenance operations and utility work on highways, roads and streets on the State Highway System. Certain requirements in this Index are based on the high volume nature of State Highways. For highways, roads and streets off the State Highway System, the local agency (City/County) having jurisdiction may adopt requirements based on the minimum requirements provided in the MUTCD.

2. Use this Index in accordance with the Plans and Indexes 102-601 through 102-680. Indexes 102-601 through 102-680 are Department-specific typical applications of commonly encountered situations. Adjust device location or number thereof as recommended by the Worksite Traffic Supervisor and approved by the Engineer. Devices include, but are not limited to, flaggers, portable temporary signals, signs, pavement markings, and channelizing devices. Comply with MUTCD or applicable Department criteria for any changes and document the reason for the change.

3. Except for emergencies, any road closure on State Highway System must comply with Section 335.15, F.S.

TABLE 1
CHANNELIZING DEVICE SPACING

Work Zone Speed (mph)	Max. Spacing (feet)			
	Cones or Temporary Tubular Markers		Type I Barricades, Type II Barricades, Vertical Panels, or Drums	
	Taper	Tangent	Taper	Tangent
≤ 45	25	50	25	50
≥ 50	25	50	50	100

TABLE 2
TAPER LENGTH "L"

Work Zone Speed (mph)	Min. Length (feet)
≤ 40	$L = \frac{WS^2}{60}$
≥ 45	$L = WS$

Where: W = width of offset in feet
S = speed in mph

TABLE 3
WORK ZONE SIGN SPACING "X"

Road Type	Min. Spacing (feet)
Arterials and Collectors with Work Zone Speed ≤ 40 mph	200
Arterials and Collectors with Work Zone Speed ≥ 45 mph	500
Limited Access Roadways *	1,500

* For Limited access roadways with work zone speed ≤ 55 mph, the minimum spacing may be reduced in accordance with the MUTCD and as approved by the Engineer.

TABLE 4
BUFFER LENGTH "B"

Work Zone Speed (mph)	Min. Length (feet)
25	155
30	200
35	250
40	305
45	360
50	425
55	495
60	570
65	645
70	730

Note: When Buffer Length "B" cannot be attained due to geometric constraints, use the greatest length possible, but not less than 155 feet.

DEFINITIONS:

Regulatory Speed (In Work Zones)

The maximum permitted travel speed posted for the work zone is indicated by the regulatory speed limit signs. The work zone speed must be shown or noted in the plans. This speed should be used as the minimum design speed to determine runout lengths, departure rates, flare rates, lengths of need, clear zone widths, taper lengths, crash cushion requirements, marker spacings, superelevation and other similar features.

Advisory Speed

The maximum recommended travel speed through a curve or a hazardous area.

Travel Way

The portion of the roadway for the movement of vehicles. For traffic control through work zones, travel way may include the temporary use of shoulders and any other permanent or temporary surface intended for use as a lane for the movement of vehicular traffic.

a. Travel Lane: The designated widths of roadway pavement marked to carry through traffic and to separate it from opposing traffic or traffic occupying other traffic lanes.

b. Auxiliary Lane: The designated widths of roadway pavement marked to separate speed change, turning, passing and climbing maneuvers from through traffic.

Detour, Lane Shift, and Diversion

A detour is the redirection of traffic onto another roadway to bypass the temporary traffic control zone. A lane shift is the redirection of traffic onto a different section of the permanent pavement. A diversion is the redirection of traffic onto a temporary roadway, usually adjacent to the permanent roadway and within the limits of the right of way.

Aboveground Hazard

An aboveground hazard is any object, material or equipment other than traffic control devices that encroaches upon the travel way or that is located within the clear zone which does not meet the Department's safety criteria, i.e., anything that is greater than 4" in height and is firm and unyielding or doesn't meet breakaway requirements.

TEMPORARY TRAFFIC CONTROL DEVICES:

1. All temporary traffic control devices shall be ON the Department's Approved Products List (APL). Ensure the appropriate APL number is permanently marked on the device in a readily visible location.

2. All temporary traffic control devices shall be removed as soon as practical when they are no longer needed. When work is suspended for short periods of time, temporary traffic control devices that are no longer appropriate shall be removed or covered. Do not store temporary traffic control devices on the shoulder, sidewalk, or other roadway facility not affected by the work when work is suspended.

3. Arrow Boards, Portable Changeable Message Signs, Radar Speed Display Trailer, Portable Regulatory Signs, and any other trailer mounted device shall be delineated with a channelizing device placed at each corner when in use and shall be moved outside the travel way and clear zone or be shielded by a barrier or crash cushion when not in use.

OVERHEAD WORK:

Work is only allowed over a traffic lane when one of the following options is used:

OPTION 1 (OVERHEAD WORK USING A MODIFIED LANE CLOSURE)

Overhead work using a modified lane closure is allowed if all of the following conditions are met:

a. Work operation is located in a signalized intersection and limited to signals, signs, lighting and utilities.
b. Work operations are 60 minutes or less.
c. Speed limit is 45 mph or less.
d. Aerial lift equipment in the work area has high-intensity, rotating, flashing, oscillating, or strobe lights operating.
e. Aerial lift equipment is placed directly below the work area to close the lane.
f. Traffic control devices are placed in advance of the vehicle/equipment closing the lane using a minimum 100 foot taper.
g. Volume or complexity of the roadway may dictate additional devices, signs, flagmen and/or a traffic control officer.

OPTION 2 (OVERHEAD WORK ABOVE AN OPEN TRAFFIC LANE)

Overhead work above a open traffic lane is allowed if all of the following conditions are met:

a. Work operation is located on a utility pole, light pole, signal pole, or their appurtenances.
b. Work operations are 60 minutes or less.
c. Speed limit is 45 mph or less.
d. No encroachment by any part of the work activities and equipment within an area bounded by 2 feet outside the edge of travel way and 18 feet high.
e. Aerial lift equipment in the work area has high-intensity, rotating, flashing, oscillating, or strobe lights operating.
f. Volume or complexity of the roadway may dictate additional devices, signs, flagmen and/or a traffic control officer.
g. Adequate precautions are taken to prevent parts, tools, equipment and other objects from falling into open lanes of traffic.
h. Other Governmental Agencies, Rail facilities, or Codes may require a greater clearance. The greater clearance required prevails as the rule.

OPTION 3 (OVERHEAD WORK ADJACENT TO AN OPEN TRAFFIC LANE)

Overhead work adjacent to an open traffic lane is allowed if all of the following conditions are met:

a. Work operation is located on a utility pole, light pole, signal pole, or their appurtenances.
b .Work operations are 1 day or less.
c. Speed limit is 45 mph or less.
d. No encroachment by any part of the work activities and equipment within 2 foot from the edge of travel way up to 18' height. Above 18' in height, no encroachment by any part of the work activities and equipment over the open traffic lane (except as allowed in Option 2 for work operations of 60 minutes or less).
e. Aerial lift equipment in the work area has high-intensity, rotating, flashing, oscillating, or strobe lights operating.
f. Volume or complexity of the roadway may dictate additional devices, signs, flagmen and/or a traffic control officer.
g. Adequate precautions are taken to prevent parts, tools, equipment and other objects from falling into open lanes of traffic.
h. Other Governmental Agencies, Rail facilities, or Codes may require a greater clearance. The greater clearance required prevails as the rule.

OVERHEAD WORK: (Cont.)

OPTION 4 (OVERHEAD WORK MAINTAINING TRAFFIC WITH NO ENCROACHMENT BELOW THE OVERHEAD WORK AREA)

Traffic shall be detoured, shifted, diverted or paced as to not encroach in the area directly below the overhead work operations in accordance with the appropriate index drawing or detailed in the plans. This option applies to, but not limited to, the following construction activities:

a. Beam, girder, segment, and bent/pier cap placement.
b. Form and falsework placement and removal.
c. Concrete placement.
d. Railing construction located at edge of deck.
e. Structure demolition.

OPTION 5 (CONDUCTOR/CABLE PULLING ABOVE AN OPEN TRAFFIC LANE)

Overhead cable and/or de-energized conductor installations initial pull to proper tension shall be done in accordance with the appropriate Index or temporary traffic control plan.

Continuous pulling operations of secured cable and/or conductors are allowed over open lane(s) of traffic with no encroachment by any part of the work activities, materials or equipment within the minimal vertical clearance above the travel way. The utility shall take precautions to ensure that pull ropes and conductors/cables at no time fall below the minimum vertical clearance.

On Limited Access facilities, a site specific temporary traffic control plan is required. The temporary traffic control plan shall include:

a. The temporary traffic control set up for the initial pulling of the pull rope across the roadway.
b. During pulling operations, advance warning consisting of no less than a Changeable Message Sign upstream of the work area with alternating messages, "Overhead Work Ahead" and "Be Prepared to Stop" followed by a traffic control officer and police vehicle with blue lights flashing during the pulling operation.

RAILROADS:

Railroad crossings affected by a construction project should be evaluated for traffic controls to reduce queuing on the tracks. The evaluation should include as a minimum: traffic volumes, distance from the tracks to the intersections, lane closure or taper locations, signal timing, etc.

SIGHT DISTANCE:

1. Tapers: Transition tapers should be obvious to drivers. If restricted sight distance is a problem (e.g., a sharp vertical or horizontal curve), the taper should begin well in advance of the view obstruction. The beginning of tapers should not be hidden behind curves.

2. Intersections: Traffic control devices at intersections must provide sight distances for the road user to perceive potential conflicts and to traverse the intersection safely. Construction equipment and materials shall not restrict intersection sight distance.

ABOVEGROUND HAZARD:

1. Aboveground hazards (see definitions) are to be considered work areas during working hours and treated with appropriate work zone traffic control procedures. During nonworking hours, all objects, materials and equipment that constitute an aboveground hazard must be stored/placed outside the travel way and clear zone or be shielded by a barrier or crash cushion.

2. For aboveground hazards within a work zone the clear zone required should be based on the regulatory speed posted during construction.

CLEAR ZONE WIDTHS FOR WORK ZONES:

The term 'clear zone' describes the unobstructed relatively flat area, impacted by construction, extending outward from the edge of the traffic lane. The table below gives clear zone widths in work zones for medians and roadside conditions other than for roadside canals; where roadside canals are present, clear zone widths are to conform with the distances to canals as described in the FDOT Design Manual 215.2.

TABLE 5

CLEAR ZONE WIDTHS FOR WORK ZONES

WORK ZONE SPEED (MPH)	TRAVEL LANES & MULTILANE RAMPS (feet)	AUXILIARY LANES & SINGLE LANE RAMPS (feet)
60-70	30	18
55	24	14
45-50	18	10
30-40	14	10
ALL SPEEDS CURB & GUTTER	4' BEHIND FACE OF CURB	4' BEHIND FACE OF CURB

NOTE: For temporary conditions where existing curb has been removed but not reconstructed, curb and gutter values may be used.

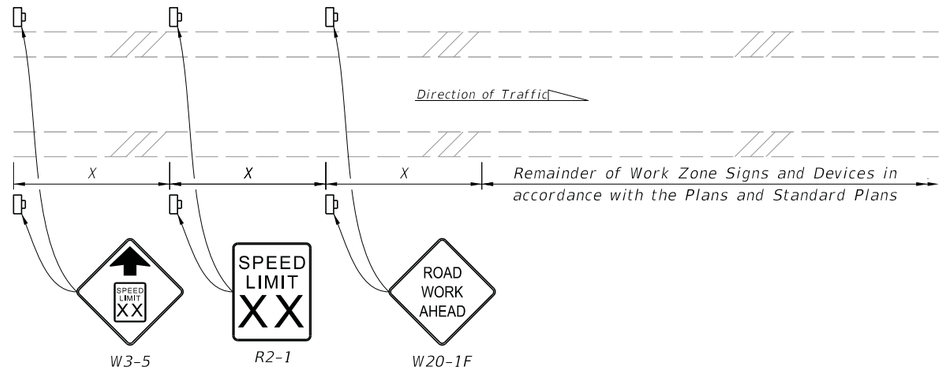

NOTES:

1. X = Work Zone Sign Spacing
2. When called for in the Plans, use this detail in accordance with the Plans and Standard Plans. Place the speed reduction signs (W3-5 and R2-1) in advance of the "Road Work Ahead" sign (W20-1F) as shown.
3. Do not use this detail in conjunction with the Motorist Awareness System.
4. For speed reductions greater than 10 MPH, reduce the speed in 10 MPH increments of 'X' distance. Do not reduce the speed below the minimum statutory speed for the class of facility.
5. Place additional "Speed Limit" signs (R2-1) at intervals of no more than one mile for rural conditions and 1,000 feet for urban conditions.
6. For undivided roadways, omit the signs shown in the median.
7. Remove temporary regulatory speed signs as soon as the conditions requiring the reduced speed no longer exist. Once the work zone regulatory speeds are removed, the regulatory speed existing prior to construction will automatically go back into effect.

SPEED REDUCTION SIGNING

SUPERELEVATION:

Horizontal curves constructed in conjunction with work zone traffic control should have the required superelevation applied to the design radii. Under conditions where normal crown controls curvature, the minimum radii that can be applied are listed in the table below.

TABLE 6

MINIMUM RADII FOR NORMAL CROWN

WORK ZONE POSTED SPEED	MINIMUM RADIUS
MPH	feet
70	4090
65	3130
60	2400
55	1840
50	1390
45	1080
40	820
35	610
30	430
Superelevate When Smaller Radii is Used	

OVERWEIGHT/OVERSIZE VEHICLES:

Restrictions to Lane Widths, Heights or Load Capacity can greatly impact the movement of over dimensioned loads. The Contractor shall notify the Engineer who in turn shall notify the State Permits Office, phone no. (850) 410-5777, at least seven calendar days in advance of implementing a maintenance of traffic plan which will impact the flow of overweight/oversized vehicles. Information provided shall include location, type of restriction (height, width or weight) and restriction time frames. When the roadway is restored to normal service the State Permits Office shall be notified immediately.

LANE WIDTHS:

Lane widths of through roadways should be maintained through work zone travel ways wherever practical. Provide minimum widths for work zone travel lanes as follows: 11' for Interstate with at least one 12' lane provided in each direction, unless formally excepted by the Federal Highway Administration; 11' for all other limited access roadways; and 10' for all other facilities.

HIGH-VISIBILITY SAFETY APPAREL:

All high-visibility safety apparel shall meet the requirements of the International Safety Equipment Association (ISEA) and the American National Standards Institute (ANSI) for "High-Visibility Safety Apparel", and labeled as ANSI/ISEA 107-2004 or newer. The apparel background (outer) material color shall be either fluorescent orange-red or fluorescent yellow-green as defined by the standard. The retroreflective material shall be orange, yellow, white, silver, yellow-green, or a fluorescent version of these colors, and shall be visible at a minimum distance of 1,000 feet. Class 3 apparel may be substituted for Class 2 apparel. Replace apparel that is not visible at 1,000 feet.

WORKERS: All workers within the right-of-way shall wear ANSI/ISEA Class 2 apparel. Workers operating machinery or equipment in which loose clothing could become entangled during operation shall wear fitted high-visibility safety apparel. Workers inside the bucket of a bucket truck are not required to wear high-visibility safety apparel.

UTILITIES: When other industry apparel safety standards require utility workers to wear apparel that is inconsistent with FDOT requirements such as NFPA, OSHA, ANSI, etc., the other standards for apparel may prevail.

FLAGGERS: For daytime activities, Flaggers shall wear ANSI/ISEA Class 2 apparel. For nighttime activities, Flaggers shall wear ANSI/ISEA Class 3 apparel.

LENGTH OF LANE CLOSURES:

For interstates and state highways with a posted speed of 55MPH or greater, lane closures must not exceed 3 miles (includes taper, buffer, and work zone) in any given direction and must not close two consecutive interchanges.

FLAGGER CONTROL:

Regulatory Speed (In Work Zones)

Where flaggers are used, a FLAGGER symbol or legend sign must replace the WORKERS symbol or legend sign.

The flagger must be clearly visible to approaching traffic for a distance sufficient to permit proper response by the motorist to the flagging instructions, and to permit traffic to reduce speed or to stop as required before entering the work site. Flaggers shall be positioned to maintain maximum color contrast between the Flagger's high-visibility safety apparel and equipment and the work area background.

Hand-Signaling Devices

STOP/SLOW paddles are the primary hand-signaling device. The STOP/SLOW paddle shall have an octagonal shape on a rigid handle. If the STOP/SLOW paddle is placed on a rigid staff, the minimum length of the staff, measured from the bottom of the paddle to the end of the staff that rests on the ground, must not be less than 6 ft. STOP/SLOW paddles shall be at least 24 inches wide with letters at least 6 inches high and should be fabricated from light semirigid material. The background of the STOP face shall be red with white letters and border. The background of the SLOW face shall be orange with black letters and border. When used at night-time, the STOP/SLOW paddle shall be retroreflectorized.

Flag use is limited to immediate emergencies, intersections, and when working on the centerline or shared left turn lanes where two (2) flaggers are required and there is opposing traffic in the adjacent lanes. Flags, when used, shall be a minimum of 24 inches square, made of a good grade of red material, and securely fastened to a staff that is approximately 36 inches in length. When used at nighttime, flags shall be retroreflectorized red.

Flashlight, lantern or other lighted signal that will display a red warning light shall be used at night.

Flagger Stations

Flagger stations shall be located far enough in advance of the work area so that approaching road users will have sufficient distance to stop before entering the work area. When used at nighttime, the flagger station shall be illuminated.

SURVEY WORK ZONES:

The SURVEY CREW AHEAD symbol or legend sign shall be the principal Advance Warning Sign used for Traffic Control Through Survey Work Zones and may replace the ROAD WORK AHEAD sign when lane closures occur, at the discretion of the Party Chief.

When Traffic Control Through Work Zones is being used for survey purposes only, the END ROAD WORK sign as called for on certain 102 Series of Indexes should be omitted.

Survey Between Active Traffic Lanes or Shared Left Turn Lanes

The following provisions apply to Main Roadway Traffic Control Work Zones. These provisions must be adjusted by the Party Chief to fit roadway and traffic conditions when the Survey Work Zone includes intersections.

(A) A STAY IN YOUR LANE (MOT-1-06) sign shall be added to the Advance Warning Sign sequence as the second most immediate sign from the work area.

(B) Elevation Surveys-Cones may be used at the discretion of the Party Chief to protect prism holder and flagger(s). Cones, if used, may be placed at up to 50' intervals along the break line throughout the work zone.

SURVEY WORK ZONES: (Cont.)

(C) Horizontal Control-With traffic flow in the same direction, cones shall be used to protect the backsight tripod and/or instrument. Cones shall be placed at the equipment, and up to 50' intervals for at least 200' towards the flow of traffic.

(D) Horizontal Control-With traffic flow in opposite directions, cones shall be used to protect the backsight tripod and/or instrument. Cones shall be placed at the equipment, and up to 50' intervals for at least 200' in both directions towards the flow of traffic.

SIGNS:

SIGN MATERIALS

Mesh signs and non-retroreflectice vinyl signs may only be used for daylight operations. Non-retroreflectice vinyl signs must meet the requirements of Specifications Section 994.

Retroreflective vinyl signs meeting the requirements of Specification Section 994 may be used for daylight or night operations not to exceed 1 day except as noted in the Indexes.

Rigid or Lightweight sign panels may be used in accordance with the vendor APL drawing for the sign stand to which they are attached.

INTERSECTING ROAD SIGNING

Signing for the control of traffic entering and leaving work zones by way of intersecting crossroads shall be adequate to make drivers aware of work zone conditions. When Work operations exceed 60 minutes, place the ROAD WORK AHEAD sign on the side street entering the work zone.

ADJOINING AND/OR OVERLAPPING WORK ZONE SIGNING

Adjoining work zones may not have sufficient spacing for standard placement of signs and other traffic control devices in their advance warning areas or in some cases other areas within their traffic control zones. Where such restraints or conflicts occur or are likely to occur, one of the following methods will be employed to avoid conflicts and prevent conditions that could lead to misunderstanding on the part of the traveling public as to the intended travel way by the traffic control procedure applied:

(A) For scheduled projects the engineer in responsible charge of project design will resolve anticipated work zone conflicts during the development of the project traffic control plan. This may entail revision of plans on preceding projects and coordination of plans on concurrent projects.

(B) Unanticipated conflicts arising between adjoining in progress highway construction projects will be resolved by the Resident Engineer for projects under his residency, and, by the District Construction Engineer for in progress projects under adjoining residencies.

(C) The District Maintenance Engineer will resolve anticipated and occurring conflicts within scheduled maintenance operations.

(D) The Unit Maintenance Engineer will resolve conflicts that occur within routine maintenance works; between routine maintenance work, unscheduled work and/or permitted work; and, between unit controlled maintenance works and highway construction projects.

SIGNS: (Cont.)

SIGN COVERING AND INTERMITTENT WORK STOPPAGE SIGNING

Existing or temporary traffic control signs that are no longer applicable or are inconsistent with intended travel paths shall be removed or fully covered.

Sign blanks or other available coverings must completely cover the existing sign. Rigid sign coverings shall be the same size as the sign it is covering, and bolted in a manner to prevent movement.

Sign covers are incidental to work operations and are not paid for separately.

SIGNING FOR DETOURS, LANE SHIFTS AND DIVERSIONS

Detours should be signed clearly over their entire length so that motorists can easily determine how to return to the original roadway. The reverse curve (W1-4) warning sign should be used for the advanced warning for a lane shift. A diversion should be signed as a lane shift.

EXTENDED DISTANCE ADVANCE WARNING SIGN

Advance Warning Signs shall be used at extended distance of one-half mile or more when limited sight distance or the nature of the obstruction may require a motorist to bring their vehicle to a stop. Extended distance Advanced Warning Signs may be required on any type roadway, but particularly be considered on multilane divided highways where vehicle speed is generally in the higher range (45 MPH or more).

UTILITY WORK AHEAD SIGN

The UTILITY WORK AHEAD (W21-7) sign may be used as an alternate to the ROAD WORK AHEAD or the ROAD WORK XX FT (W20-1) sign for utility operations on or adjacent to a highway.

LENGTH OF ROAD WORK SIGN

The length of road work sign (G20-1) bearing the legend ROAD WORK NEXT_____ MILES is required for all projects of more than 2 miles in length. The number of miles entered should be rounded up to the nearest mile. The sign shall be located at begin construction points.

GROOVED PAVEMENT AHEAD SIGN

The GROOVED PAVEMENT AHEAD sign is required 500 feet in advance of a milled or grooved surface open to traffic. The W8-15P placard shall be used in conjunction with the GROOVED PAVEMENT AHEAD sign.

END ROAD WORK SIGN

The END ROAD WORK sign (G20-2) should be installed on all projects, but may be omitted where the work operation is less than 1 day. The sign should be placed approximately 500 feet beyond the end of a construction or maintenance project unless other distance is called for in the plans. When other Construction or Maintenance Operations occur within 1 mile this sign should be omitted and signing coordinated in accordance with Index 102-600, ADJOINING AND/OR OVERLAPPING WORK ZONE SIGNING.

NOTES:

1. All signs shall be post mounted when work operations exceed one day except for:

   a. Road closure signs mounted in accordance with the vendor drawing for the Type III Barricade shown on the APL.
   b. Pedestrian and bicycle advanced warning or pedestrian regulatory signs mounted on sign supports in accordance with the vendor drawing shown on the APL.
   c. Median barrier mounted signs per Index 700-013.
   d. Bridge mounted signs per Index 700-012.

2. Unless shielded with barrier or outside of the Clear Zone, signs mounted on temporary supports or barricades, and barricade/sign combination must be crashworthy in accordance with NCHRP 350 requirements and included on the Approved Products List (APL).

3. Use only approved systems listed on the Department's Approved Products List (APL).

4. Manufacturers seeking approval of U-Channel and steel square tube sign support assemblies for inclusion on the Approved Products List (APL) must submit a APL application, design calculations (for square tube only), and detailed drawings showing the product meets all the requirements of this Index.

5. Provide 3 lb/ft Steel U-Channel Posts with a minimum section modulus of 0.43 in³ for 60 ksi steel, a minimum section modulus of 0.37 in³ for 70 ksi steel, or a minimum section modulus of 0.34 in³ for 80 ksi steel.

6. Provide 4 lb/ft Steel U-Channel Posts with a minimum section modulus of 0.56 in³ for 60 ksi steel, or a minimum section modulus of 0.47 in³ for 70 ksi or 80 ksi steel.

7. U-channel posts shall conform with ASTM A 499, Grade 60, or ASTM A 576, Grade 1080 (with a minimum yield strength of 60 ksi). Square tube posts shall conform with ASTM A 653, Grade 50, or ASTM A 1011, Grade 50.

8. Sign attachment bolts, washers, nuts, and spacers shall conform with ASTM A307 or A 36.

9. Install 4 lb/ft Steel U-Channel Posts with approved breakaway splice in accordance with the manufacturer's detail shown on the APL.

10. The contractor may install 3 lb/ft Steel U-Channel Posts with approved breakaway splice in accordance with the manufacturer's detail shown on the APL.

11. Install all posts plumb.

12. The contractor may set posts in preformed holes to the specified depth with suitable backfill tamped securely on all sides, or drive 3 lb/ft sign posts and any size base post in accordance with the manufacturer's detail shown on the APL.

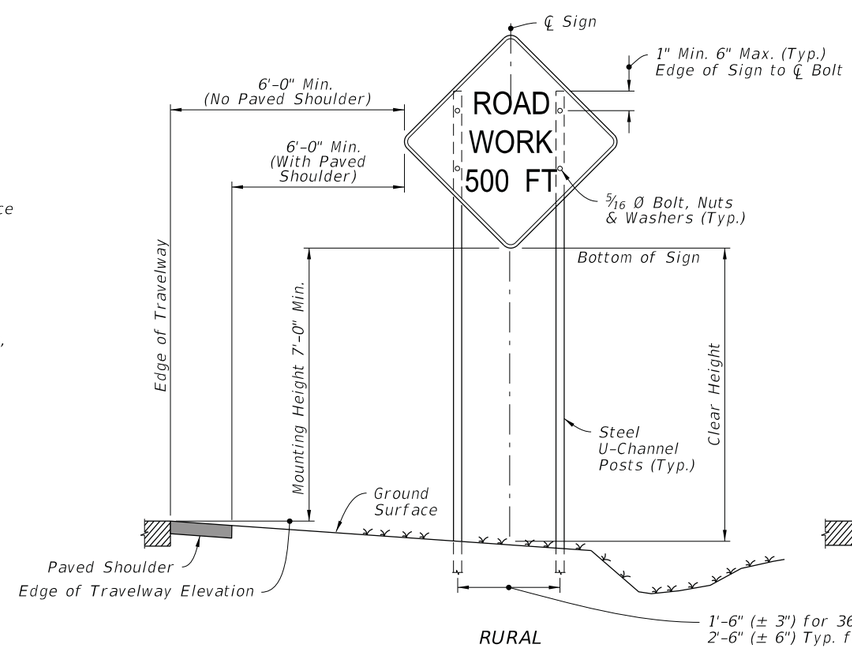

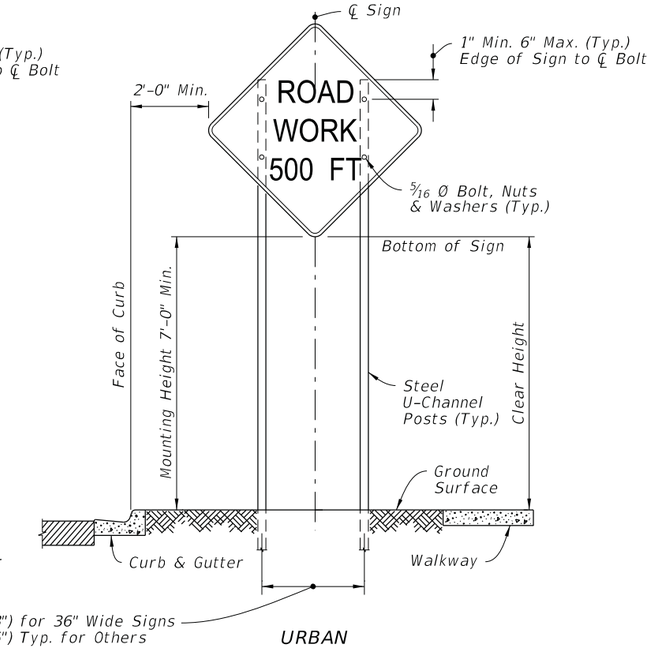

2 POST SIGN SUPPORT MOUNTING DETAILS
(SINGLE POST SIMILAR)

Where:
W = 48": a = 1' - 4½" (± 1")
W = 72": a = 2' - 1" (± 1")

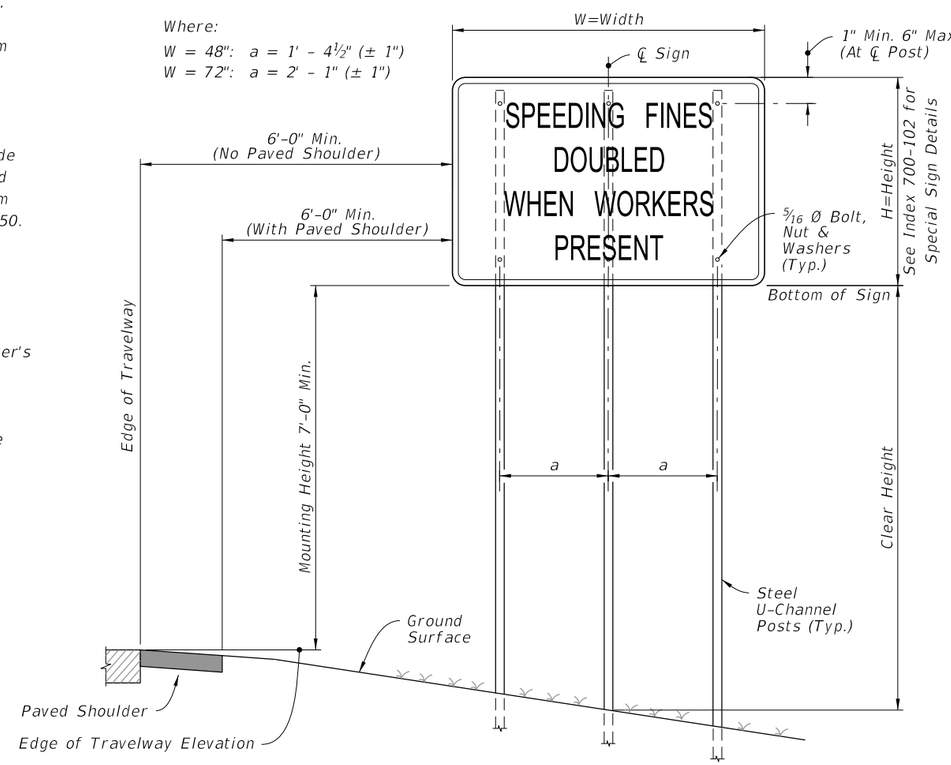

3 POST SIGN SUPPORT MOUNTING DETAILS

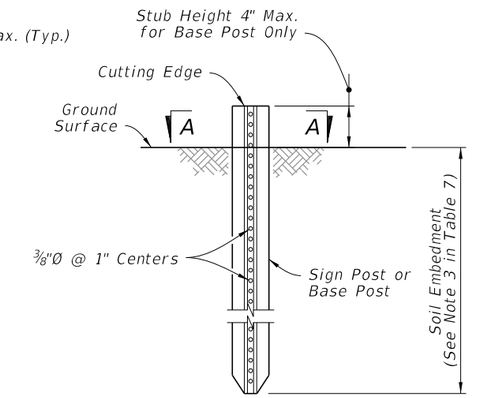

See APL for post, splice and connection details.
No bolts installed closer than 1" to cutting edge.

FOUNDATION DETAIL

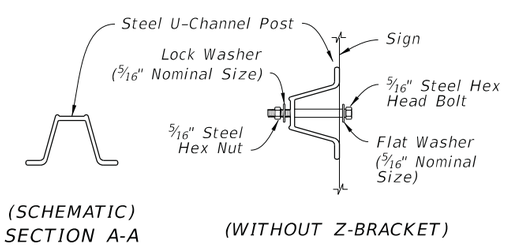

SIGN ATTACHMENT DETAIL

TABLE 7
POST AND FOUNDATION TABLE FOR WORK ZONE SIGNS

SIGN SHAPE	SIGN SIZE (inches)	NUMBER OF STEEL U CHANNEL POSTS
Octagon	30x30	1
Triangle	36x36x36	1
	48x48x48	1
	60x60x60	2
Rectangle (W x H)	24x18	1
	24x30	1
	30x24	1
	36x18	1
	36x24	1
	48x18	1
	48x24	1
	36x48	2
	48x30	2
	48x36	2
	54x36	2
	48x60	3
	72x48	3
Square	30x30	1
	36x36	2
	48x48	2
Diamond	48x48	2
Circle	36Ø	2

Notes For Table:

1. Use 3 lb/ft posts for Clear Height up to 10' and 4 lb/ft posts for Clear Height up to 12'.

2. Minimum foundation depth is 4.0' for 3 lb/ft posts and 4.5' for 4 lb/ft posts.

3. For both 3 lb/ft and 4 lb/ft base or sign posts installed in rock, a minimum cumulative depth of 2' of rock layer is required.

4. The soil plate as shown on the APL vendor drawing is not required for base posts or sign posts installed in existing rock (as defined in Note 3), asphalt roadway, shoulder pavement or soil under sidewalk.

5. For diamond warning signs with supplement plaque (up to 5 ft² in area), use 4 lb/ft posts for up to 10 ft Clear Height (measure to the bottom of diamond warning sign).

10/27/2022 7:36:03 AM

WORK ZONE SIGN SUPPORTS

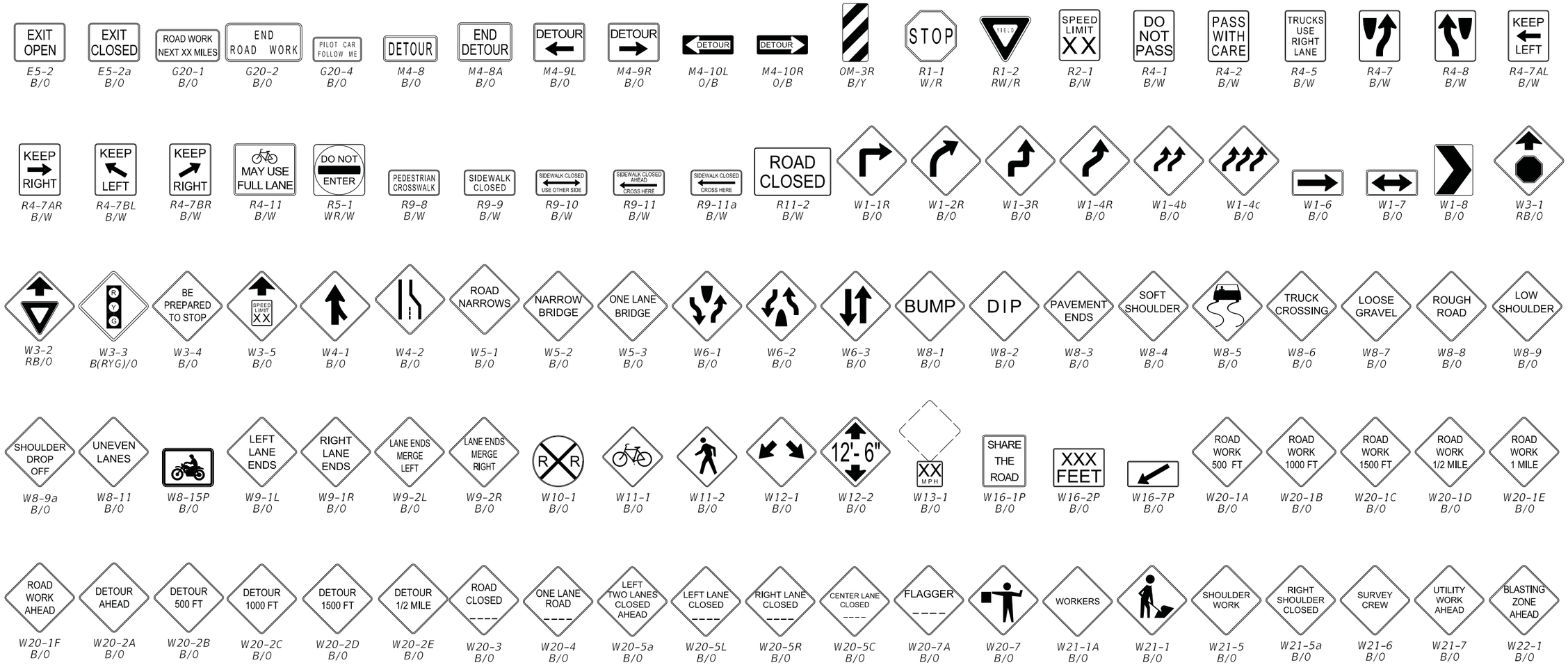

NOTES:

1. The size of diamond shaped Temporary Traffic Control (TTC) warning signs shall be a minimum of 48" X 48".
2. Fluorescent orange shall be used for all orange colored work zone signs.
3. The sign shields, symbols and messages contained on this sheet are provided for ready reference to those signs used in the development of the 102 Series of Indexes and are commonly used in the development of traffic control plans. For additional signs and sign detail information refer to the STANDARD HIGHWAY SIGNS MANUAL as specified in the MUTCD. Special signs for traffic control plans will be as approved by the State Traffic Plans Engineer.

   The sign codes shown on this sheet are for the purpose of identifying cell names found in the Traffic Control Cell Library (TCZ.Cel).

   The STANDARD HIGHWAY SIGNS MANUAL should be referenced for the official sign codes for use in the development of traffic control plans.

   See Index 700-102 for MOT sign details.

COLOR CODES:

Legend and/or
Symbol Background

R-Red (Reflectorized)
Y-Yellow (Reflectorized)
G-Green (Reflectorized)
O-Orange (Reflectorized)
B-Black (Non-Reflectorized)
W-White (Reflectorized)

10/27/2022 7:36:06 AM

COMMONLY USED WARNING AND REGULATORY SIGNS IN WORK ZONES

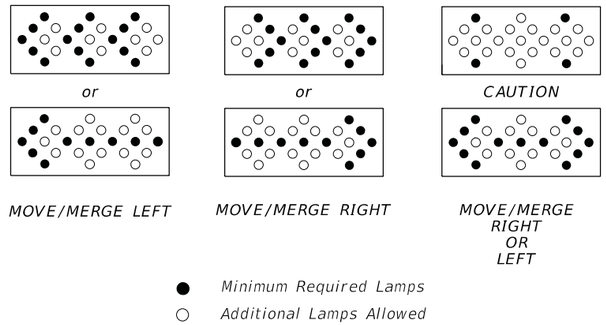

MODES

NOTES:

An arrow board in the arrow or chevron mode shall be used only for stationary or moving lane closures on multilane roadways.

For shoulder work, blocking the shoulder, for roadside work near the shoulder, or for temporarily closing one lane on a two-lane, two-way roadway, an arrow board shall be used only in the caution mode.

A single arrow board shall not be used to merge traffic laterally more than one lane. When arrow boards are used to close multiple lanes, a single board shall be used at the merging taper for each closed lane.

When Advance Warning Arrow Boards are used at night, the intensity of the flashers shall be reduced during darkness when lower intensities are desirable.

ADVANCE WARNING ARROW BOARDS

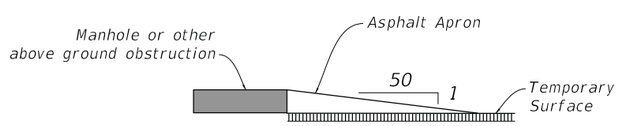

NOTES:

Manholes extending 1" or more above the travel lane and crosswalks having an uneven surface greater than ¼" shall have a temporary asphalt apron constructed as shown above.

All transverse joints that have a difference in elevation of 1" or more shall have a temporary asphalt apron constructed as shown above.

The apron is to be removed prior to constructing the next lift of asphalt. The cost of the temporary asphalt shall be included in the contract unit price for Maintenance of Traffic, LS.

MANHOLES/CROSSWALKS/JOINTS

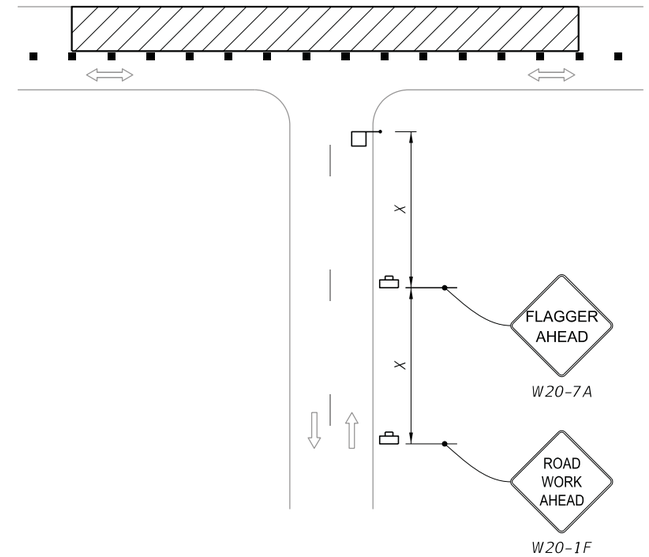

NOTE:

Optionally, use "Flagger Ahead" sign with text (W20-7A) instead of "Flagger Ahead" sign with symbol (W20-7).

SIDE ROAD INTERSECTING THE WORK ZONE

SIGNALS:

Existing traffic signal operations that require modification in order to carry out work zone traffic control shall be included in the Plans and be approved by the District Traffic Operations Engineer.

Refer to Specification 102-9 for additional information.

CHANNELIZING DEVICES:

Channelizing devices for work zone traffic control shall be as prescribed in Part VI of the MUTCD, subject to supplemental revisions provided in the contract documents and the 102 Series of Indexes. Lighting Devices must not be used to supplement channelization. Omit tapers and channelizing devices for paved shoulders less than 4' in width.

CHANNELIZING DEVICE CONSISTENCY:

Barricades, vertical panels, cones, tubular markers and drums shall not be intermixed within either the lateral transition or within the tangent alignment.

TRUCK/TRAILER-MOUNTED ATTENUATORS:

Truck/Trailer-mounted attenuators (TMA) can be used for moving operations and short-term stationary operations. For moving operations, see Index 102-607. For short-term, stationary operations, see Part VI of the MUTCD.

DROP-OFF CONDITION NOTES

1. These conditions and treatments can be applied only in work areas that fall within a properly signed work zone.

2. When drop-offs occur within the clear zone due to construction or maintenance activities, protection devices are required (See Table 8). A drop-off is defined as a drop in elevation, parallel to the adjacent travel lanes, greater than 3" with slope (A:B) steeper than 1:4. In superelevated sections, the algebraic difference in slopes should not exceed 0.25 (See Drop-off Condition Detail).

3. Drop-offs may be mitigated by placement of slopes with optional base material per Specifications Section 285. Slopes shallower than 1:4 may be required to avoid algebraic difference in slopes greater than 0.25. Include the cost for the placement and removal of the material in Maintenance of Traffic, LS. Use of this treatment in lieu of a temporary barrier is not eligible for CSIP consideration. Conduct daily inspections for deficiencies related to erosion, excessive slopes, rutting or other adverse conditions. Repair any deficiencies immediately.

4. For Setback Distance, refer to the Index or Approved Products List (APL) drawing of the selected barrier.

5. For Conditions 1 and 3 provided in Table 8, any drop-off condition that is created and restored within the same work period will not be subject to use of temporary barriers; however, channelizing devices will be required.

6. When permanent curb heights are ≥ 6", no channelizing device will be required. For curb heights < 6", see Table 8.

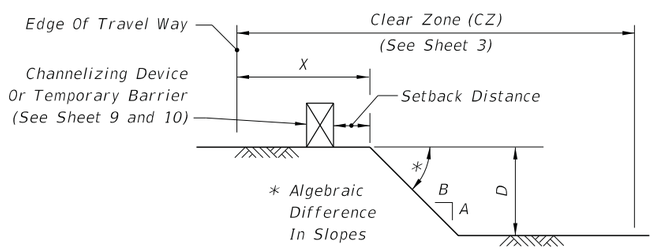

DROP-OFF CONDITION DETAIL

Table 8 Drop-off Protection Requirements			
Condition	X (ft)	D (in.)	Device Required
1	0-12	> 3	Temporary Barrier
2	> 12-CZ	> 3 to ≤ 5	Channelizing Device
3	0-CZ	> 5	Temporary Barrier
4	Removal of Bridge or Retaining Wall Barrier		Temporary Barrier
5	Removal of portions of Bridge Deck		Temporary Barrier

TRAVEL LANE TREATMENT FOR MILLING OR RESURFACING NOTES

1. This treatment applies to resurfacing or milling operations between adjacent travel lanes.

2. Whenever there is a difference in elevation between adjacent travel lanes, the W8-11 sign with "UNEVEN LANES" is required at intervals of ½ mile maximum.

3. If D is 1½" or less, no treatment is required.

4. Treatment allowed only when D is 3" or less.

5. If the slope is steeper than 1:4 (not to be steeper than 1:1), the R4-1 and MOT-1-06 signs shall be used as a supplement to the W8-11; this condition should never exceed 3 miles in length.

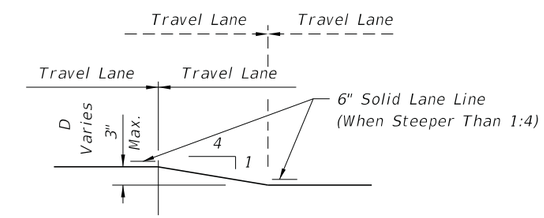

TRAVEL LANE TREATMENT FOR MILLING OR RESURFACING DETAIL

PEDESTRIAN WAY DROP-OFF CONDITION NOTES

1. A pedestrian way drop-off is defined as:

   a. a drop in elevation greater than 10" that is closer than 2' from the edge of the pedestrian way

   b. a slope steeper than 1:2 that begins closer than 2' from the edge of the pedestrian way when the total drop-off is greater than 60"

2. Protect any drop-off adjacent to a pedestrian way with pedestrian longitudinal channelizing devices, temporary barrier wall, or approved handrail.

DROP-OFFS IN WORK ZONES

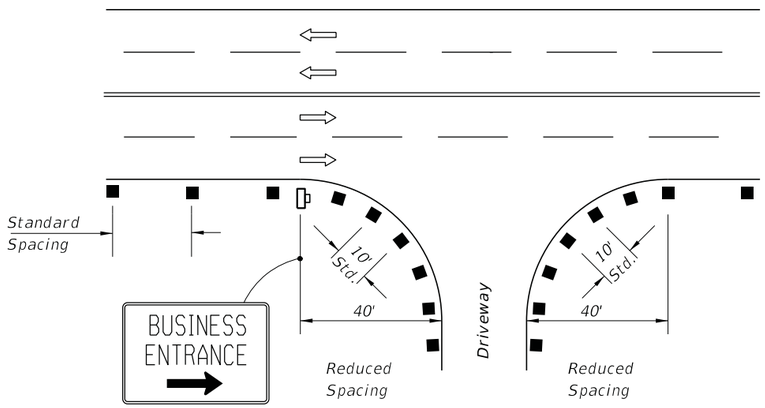

1. For single business entrances, place one 24" x 36" business sign for each driveway entrance affected. Signs shall show specific business names. Logos may be provided by business owners. Standard BUSINESS ENTRANCE sign in Index 700-102 may be used when approved by the Engineer.

2. When several businesses share a common driveway entrance, place one 24" x 36" standard BUSINESS ENTRANCE sign in accordance with Index 700-102 at the common driveway entrance.

3. Channelizing devices shall be placed at a reduced spacing on each side of the driveway entrance, but shall not restrict sight distance for the driveway users.

4. Business entrance signs are intended to guide motorist to business entrances moved/modified or disturbed during construction projects. Business entrance signs are not required where there is minimal disruption to business driveways which is often the case with resurfacing type projects.

PLACEMENT OF BUSINESS ENTRANCE SIGNS AND CHANNELIZING DEVICES AT BUSINESS ENTRANCE

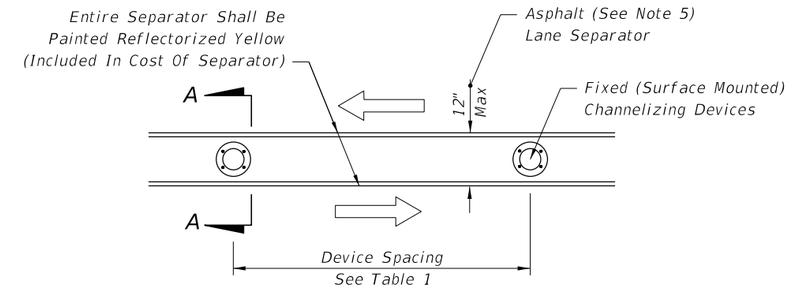

PLAN

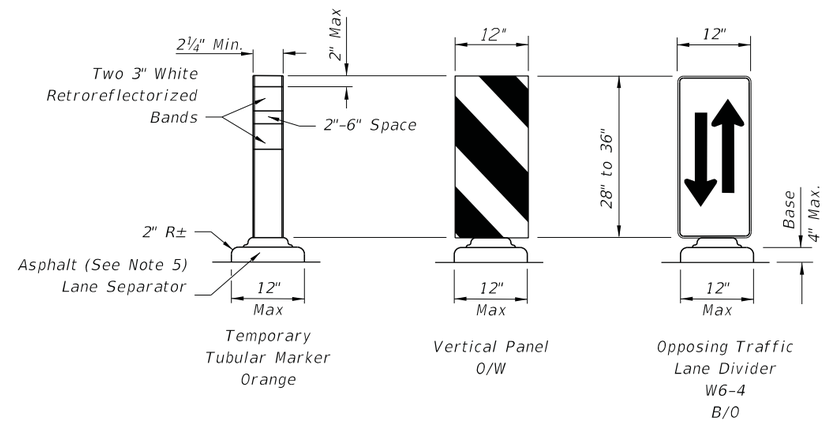

FIXED (SURFACE MOUNTED)
CHANNELIZING DEVICES

SECTION A-A

1. Temporary lane separators shall be supplemented with any of the following approved fixed (surface mounted) channelizing devices: temporary tubular markers, vertical panels, or opposing traffic lane divider panels. Opposing traffic lane divider panels (W6-4) shall only be used as center lane dividers to separate opposing vehicular traffic on a two-lane, two-way operation. Temporary Tubular Markers, Vertical Panels and Opposing Traffic Lane Divider panels shall not be intermixed within the limits where the temporary lane separator is used. The connection between the channelizing device and the temporary lane separator curb shall hold the channelizing device in a vertical position.

2. Reflectorized materials shall have a smooth sealed outer surface which will display the same approximate color day and night. Furnish channelizing devices having retroreflective sheeting meeting the requirements of Section 990.

3. 12" openings for drainage shall be constructed in the asphalt and portable temporary lane separator at a maximum spacing of 25' in areas with grades of 1% or less or 50' in areas with grades over 1% as directed by the Engineer.

4. Tapered ends shall be used at the beginning and end of each run of the temporary lane separator to form a gradual increase in height from the pavement level to the top of the temporary lane separator.

5. The Contractor has the option of using portable temporary lane separators containing fixed channelizing devices in lieu of the temporary asphalt separator and channelizing devices detailed on this sheet. The portable temporary lane separator shall come in portable sections that can be connected to maintain continuous alignment between the separate curb sections. Each temporary lane separator section shall be 36 inches to 48 inches in total length. Portable temporary lane separators shall duplicate the color of the pavement marking. Portable temporary lane separators shall be one of those listed on the Approved Products List.

TEMPORARY LANE SEPARATOR

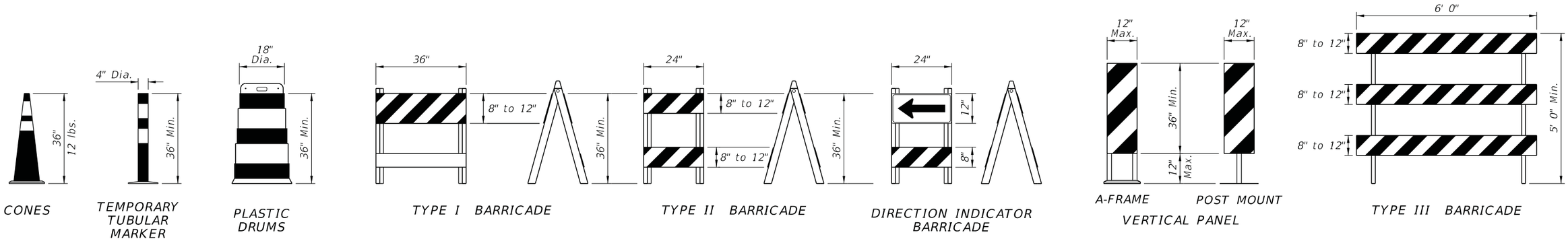

CHANNELIZING DEVICES

CHANNELIZING DEVICE NOTES:

1. The details shown on this sheet are for the following purposes:
   a. For ease of identification and
   b. To provide information that supplements or supersedes that provided by the MUTCD.

2. The Type III Barricade shall have a unit length of 6'-0" only. When barricades of greater lengths are required those lengths shall be in multiples of the 6'-0" unit.

3. No sign panel should be mounted on any channelizing device unless the channelizing device/sign combination was found to be crashworthy and the sign panel is mounted in accordance with the vendor drawing for the channelizing device shown on the Approved Products List (APL).

4. Ballast shall not be placed on top rails or any striped rails or higher than 13" above the driving surface.

5. The direction indicator barricade may be used in tapers and transitions where specific directional guidance to drivers is necessary. If used, direction indicator barricades shall be used in series to direct the driver through the transition and into the intended travel lane.

6. The splicing of sheeting is not permitted on channelizing devices or MOT signs.

7. For rails less than 3'-0" long, 4" stripes shall be used.

8. Cones shall:
   a. Be used only in active work zones where workers are present.
   b. Be reflectorized as per the MUTCD with Department-approved reflective collars when used at night.

9. For pedestrian longitudinal channelizing devices, the device shall have a minimum of 8" continuous detectable edging above the walkway. A gap not exceeding a height of 2" is allowed to facilitate drainage. The top surface of the device shall be a minimum height of 32" and have a ⅛" or less difference in any plane at all connection points between the devices to facilitate hand trailing. The bottom and the top surface of the device shall be in the same vertical plane. If pedestrian drop-off protection is required, the device shall have a footprint or offset of at least 2', otherwise the device must be at least 42" in height above the walkway and be anchored or ballasted to withstand a 200 lb lateral point load at the top of the device.

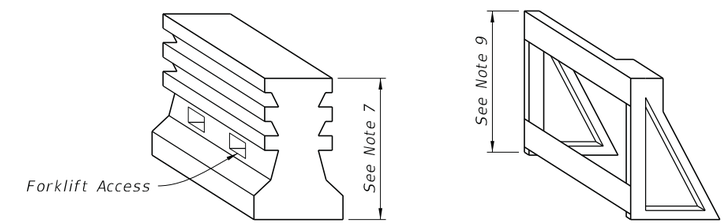

PEDESTRIAN LONGITUDINAL CHANNELIZING DEVICES

TEMPORARY BARRIER NOTES:

1. Where a barrier is specified, any of the types below may be used in accordance with the applicable Index:

Index	Description
102-100	Temporary Barrier
102-120	Low Profile Barrier
536-001	Guardrail

2. Trailer Mounted Barriers may be used to provide positive protection for workers within the work areas. APL drawings may be used as a guide to develop project specific Temporary Traffic Control Plans that are signed and sealed by the Contractor's Engineer.

10/27/2022 7:36:10 AM

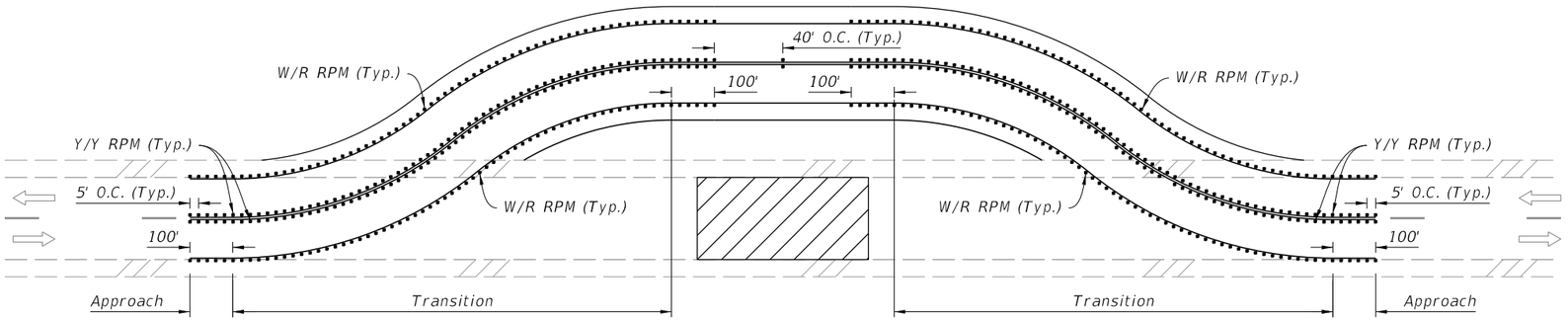

RPM PLACEMENT ON TWO-LANE ROADWAYS

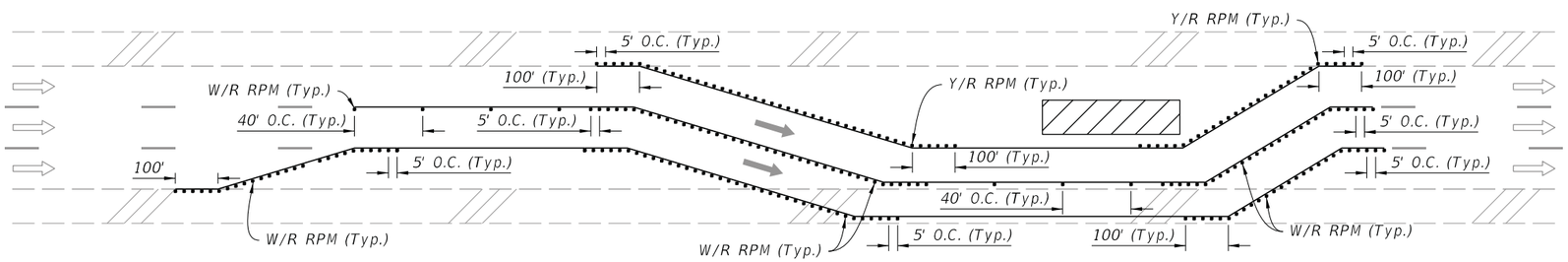

RPM PLACEMENT ON MULTILANE ROADWAYS
(Lane Shift Shown, Other Multilane Typical Applications Similar)

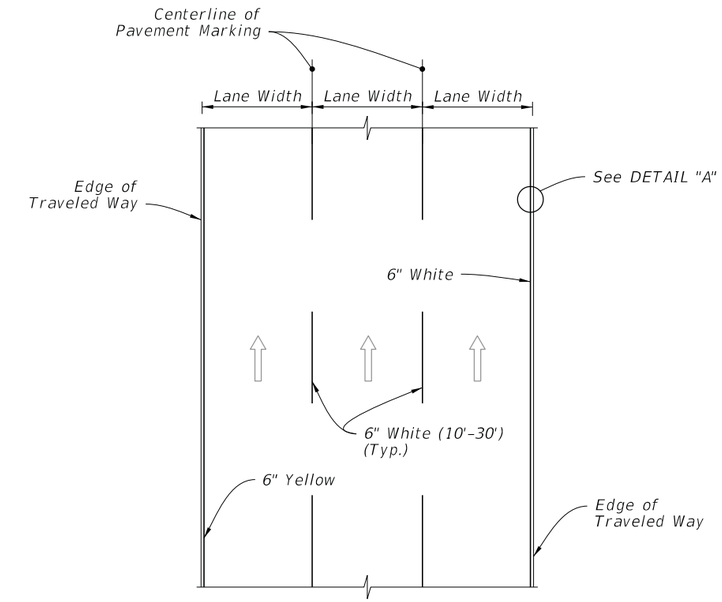

PLAN VIEW

NOTES:

1. Install RPMs as a supplement to:
   a. All lane lines
   b. Edge lines in transitions (e.g., merges, diversions, lane shifts)
   c. Edge lines of gore areas

2. Extend pavement marking and 5' RPM spacing by 100' in each direction for all transitions regardless of the line type.

3. Place RPMs in accordance with this detail and Index 706-001.

SYMBOLS:

Work Area

Lane Identification and Direction of Traffic

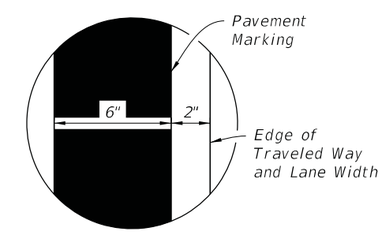

DETAIL "A"

RPM PLACEMENT IN WORK ZONES

PAVEMENT MARKINGS PLACEMENT

WORK ZONE PAVEMENT MARKINGS

LAST REVISION	REVISION	DESCRIPTION:			INDEX	SHEET
11/01/20			FY 2023-24 STANDARD PLANS	GENERAL INFORMATION FOR TRAFFIC CONTROL THROUGH WORK ZONES	102-600	11 of 11

10/27/2022 7:36:11 AM

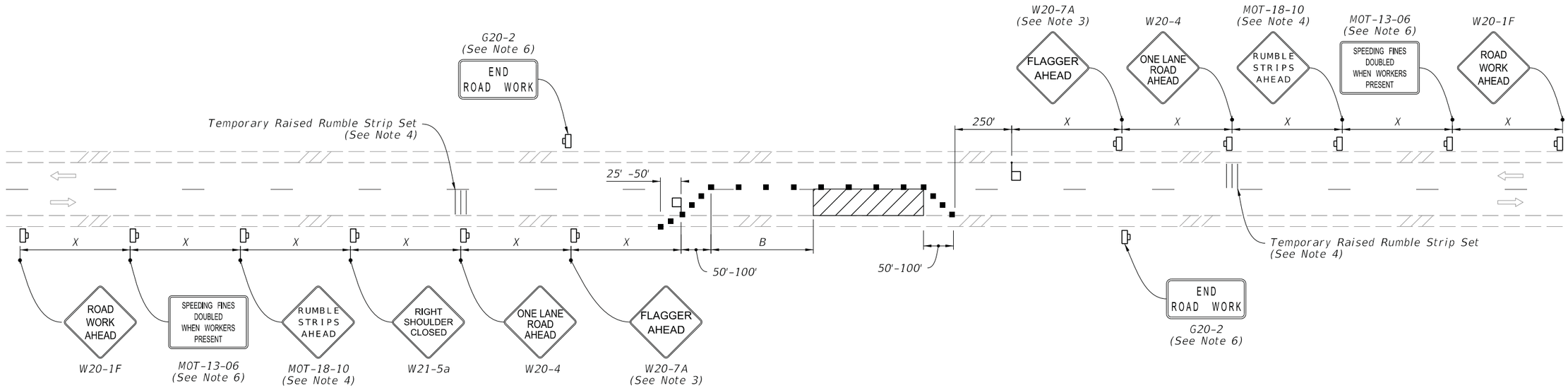

NOTES:

1. This Index applies to Two-Lane, Two-Way Roadways with work within the traveled way.

2. L = Taper Length
   B = Buffer Length
   X = Work Zone Sign Spacing
   See Index 102-600 for "L", "B", "X" and channelizing device spacing values.

3. Optionally, use "Flagger Ahead" sign with symbol (W20-7) instead of "Flagger Ahead" sign with text (W20-7A).

4. Use temporary raised rumble strips when the existing posted speed is 55 mph or greater and the work duration is greater than 60 minutes. If temporary raised rumble strips are not used, omit "Rumble Strips Ahead" signs (MOT-18-10) and associated work zone sign spacing.

5. Additional one-way control may be provided by the following means:
   a. Flag-carrying vehicle
   b. Official vehicle
   c. Pilot vehicles
   d. Traffic signals

   When flaggers are the sole means of one-way control, the flaggers must be in sight of each other or in direct communication at all times.

6. The "Speeding Fines Doubled When Workers Present" signs (MOT-13-06) and "End Road Work" signs (G20-2), along with associated work zone sign spacing, may be omitted when the work operation will be in place for 24 hours or less.

7. Automated Flagger Assistance Devices (AFADs) may be used in accordance with Specification Sections 102, 990 and the APL vendor drawings.

8. Railroad Crossings:

   a. If an active railroad crossing is located closer to the Work Area than the queue length plus 300 feet, extend the Buffer Space as shown on Sheet 2.

   b. If the queuing of vehicles across an active railroad crossing cannot be avoided, provide a uniformed traffic control officer or flagger at the highway-rail grade crossing to prevent vehicles from stopping within the highway-rail grade crossing, even if automatic train warning devices are in place.

SYMBOLS:

- Work Area
- Channelizing Device (See Index 102-600)
- Work Zone Sign
- Flagger
- Lane Identification and Direction of Traffic

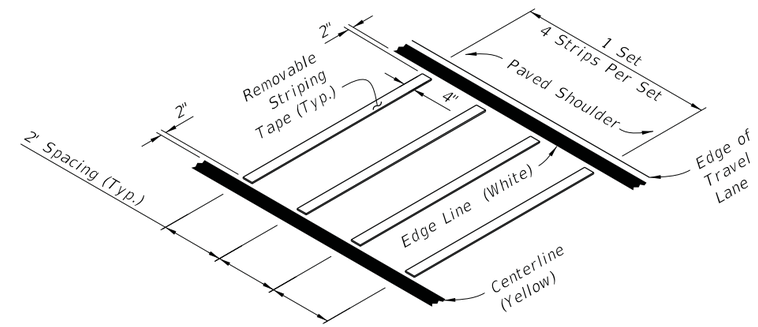

OPTION - 1
REMOVABLE STRIPING TYPE

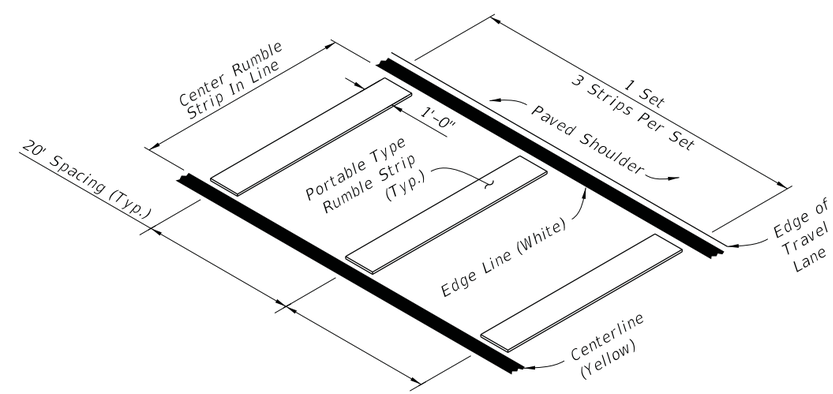

OPTION - 2
PORTABLE TYPE

RUMBLE STRIP SETS

LAST REVISION	REVISION	DESCRIPTION:			INDEX	SHEET
11/01/21			FY 2023-24 STANDARD PLANS	TWO-LANE, TWO-WAY WORK WITHIN THE TRAVEL WAY	102-603	1 of 2

10/6/2022 1:24:30 PM

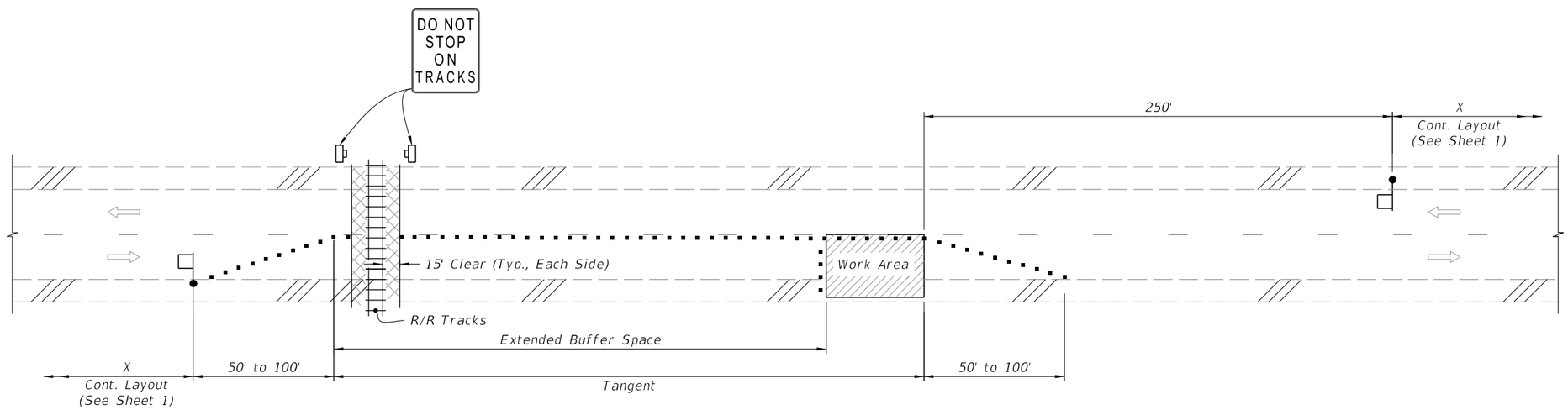

TEMPORARY RAILROAD CROSSING BUFFER SPACE EXTENSION

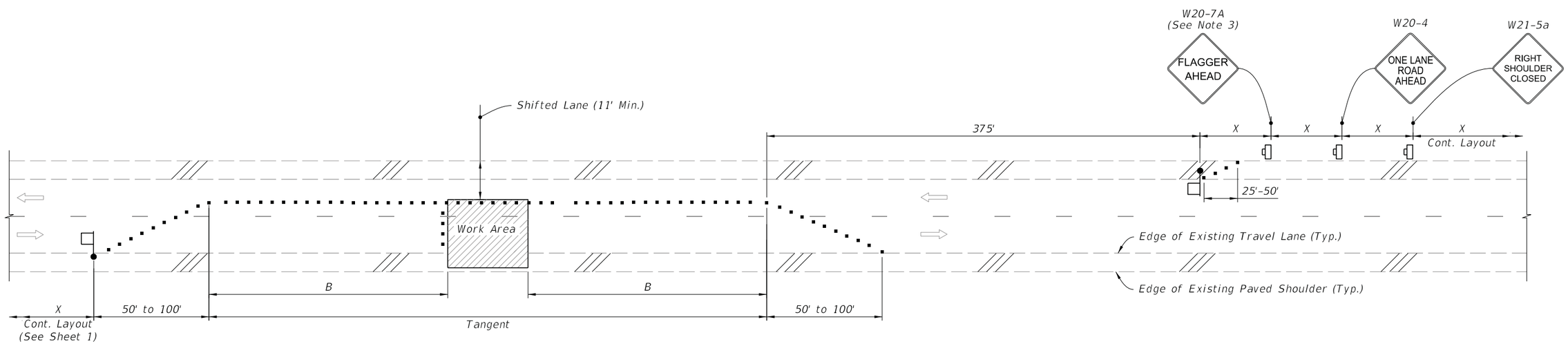

TEMPORARY LANE SHIFT TO SHOULDER WHEN WORK AREA ENCROACHES ON THE CENTERLINE
(For Work Operations In place 24 Hours or Less)

SYMBOLS:

- Work Area
- Channelizing Device (See Index 102-600)
- Work Zone Sign
- Flagger
- Lane Identification and Direction of Traffic

SPECIAL CONDITIONS

LAST REVISION	REVISION	DESCRIPTION:			INDEX	SHEET
11/01/21			FY 2023-24 STANDARD PLANS	TWO-LANE, TWO-WAY WORK WITHIN THE TRAVEL WAY	102-603	2 of 2

10/6/2022 1:24:30 PM

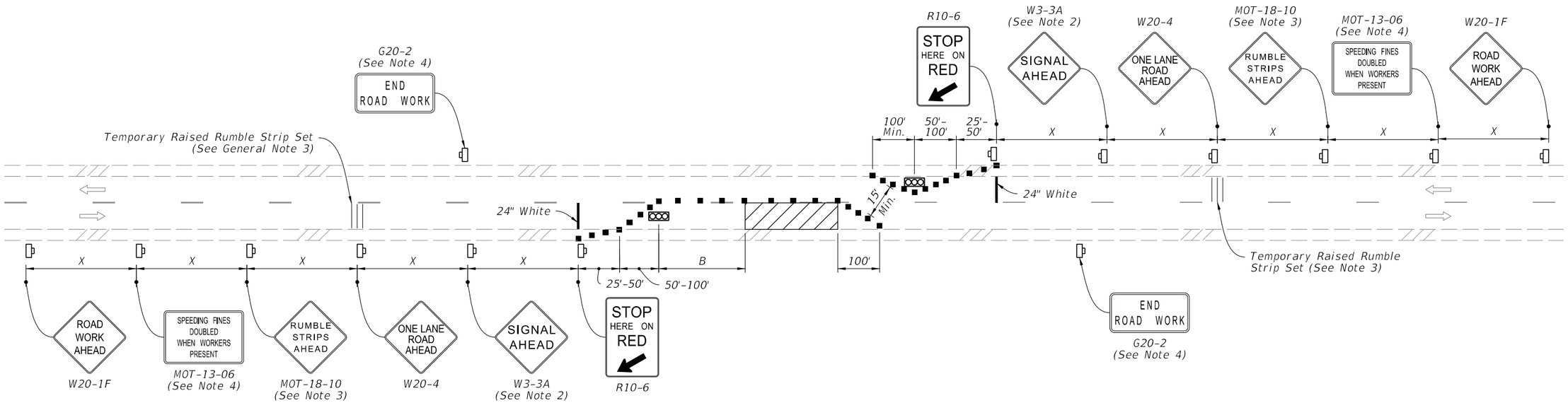

NOTES:

1. L = Taper Length
   B = Buffer Length
   X = Work Zone Sign Distance
   See Index 102-600 for "L", "B", "X", and channelizing device spacing values.

2. Optionally, use "Signal Ahead" signs with symbols (W3-3) instead of "Signal Ahead" signs with text (W3-3A).

3. Use temporary raised rumble strips in accordance with Index 102-603.

4. The "Speeding Fines Doubled When Workers Present" signs (MOT-13-06) and "End Road Work" signs (G20-2), along with associated work zone sign distances, may be omitted when the work operation will be in place for 24 hours or less.

5. For the maximum distance between temporary traffic signals, do not exceed the distance at which the temporary traffic signals can safely communicate. When the distance temporary traffic signals is greater than 0.25 miles, use a combination of a pilot vehicle and manually-controlled temporary traffic signals.

6. Monitor temporary traffic signals by having one or more workers present during operation. In the event of a temporary traffic signal failure, use flaggers to control traffic.

SYMBOLS:

- Work Area
- Channelizing Device (See Index 102-600)
- Work Zone Sign
- Temporary Traffic Signal
- Lane Identification and Direction of Traffic

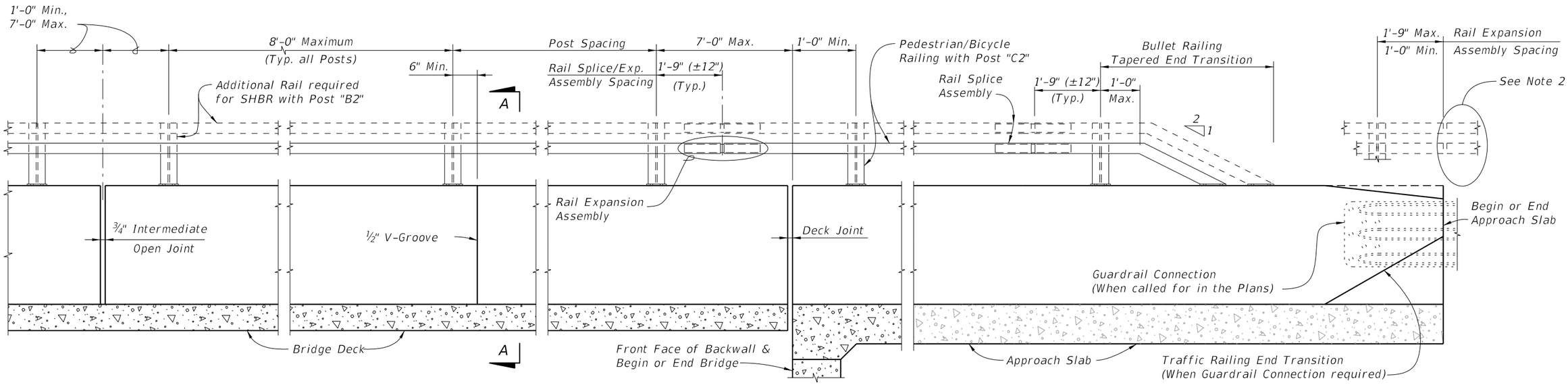

ELEVATION OF INSIDE FACE OF TRAFFIC RAILING WITH PEDESTRIAN/BICYCLE BULLET RAILING

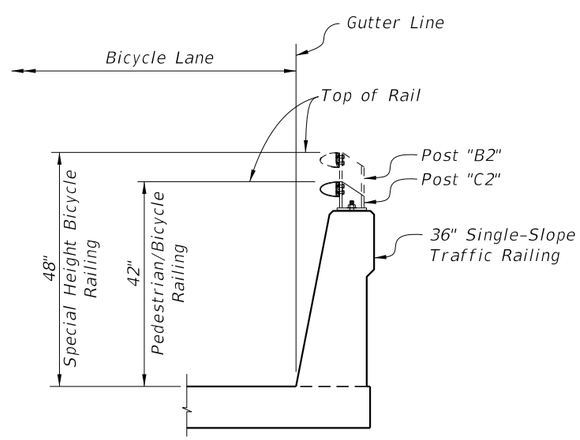

SECTION A-A
TYPICAL SECTION THRU BRIDGE DECK
(APPROACH SLAB SIMILAR)

NOTES:

1. A Bullet Railing Tapered-End Transition is required for all approach ends of Bullet Railings on Traffic Railings. When Guardrail Connection is required terminate the Bullet Railing Tapered-End Transition at beginning of the Traffic Railing End Transition.

2. Where Bullet Railing continues on retaining wall mounted Traffic Railings or Barriers, provide a Bullet Railing Tapered End Transition at the terminus of the Bullet Railing.

CROSS REFERENCES:

Work in conjunction with Index 515-022.

For Traffic Railing Details, Reinforcement and Notes see Index 521-427.

10/6/2022 11:20:43 AM

LAST REVISION	REVISION	DESCRIPTION:				
11/01/17			FY 2023-24 STANDARD PLANS	PEDESTRIAN/BICYCLE BULLET RAILING FOR TRAFFIC RAILING	INDEX 515-021	SHEET 1 of 1

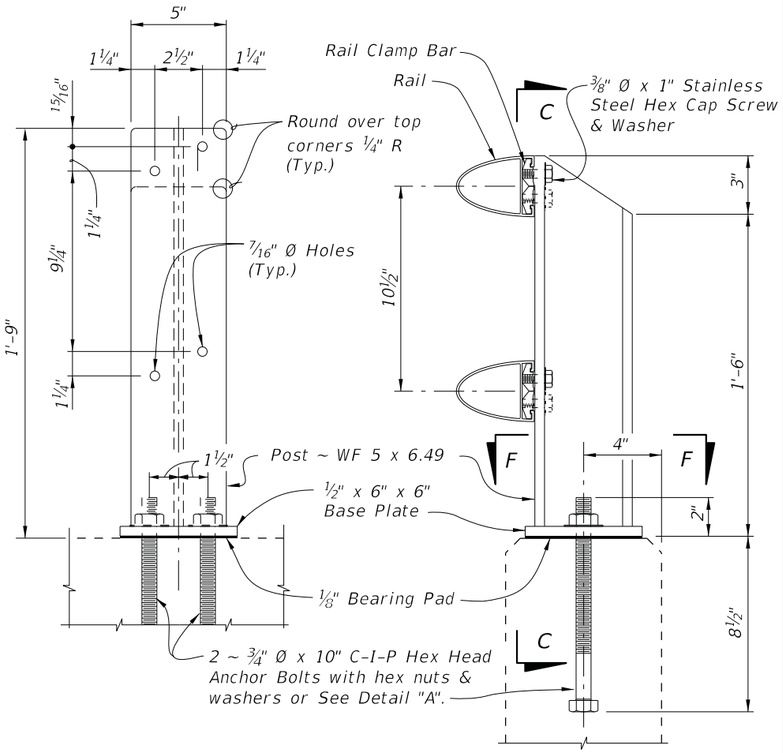

SECTION C-C
(RAILS NOT SHOWN)

ELEVATION
OF POST "D"

POST "D" DETAILS FOR SPECIAL HEIGHT BICYCLE RAILING (SHBR) ON CONCRETE PARAPET (INDEX 521-820)

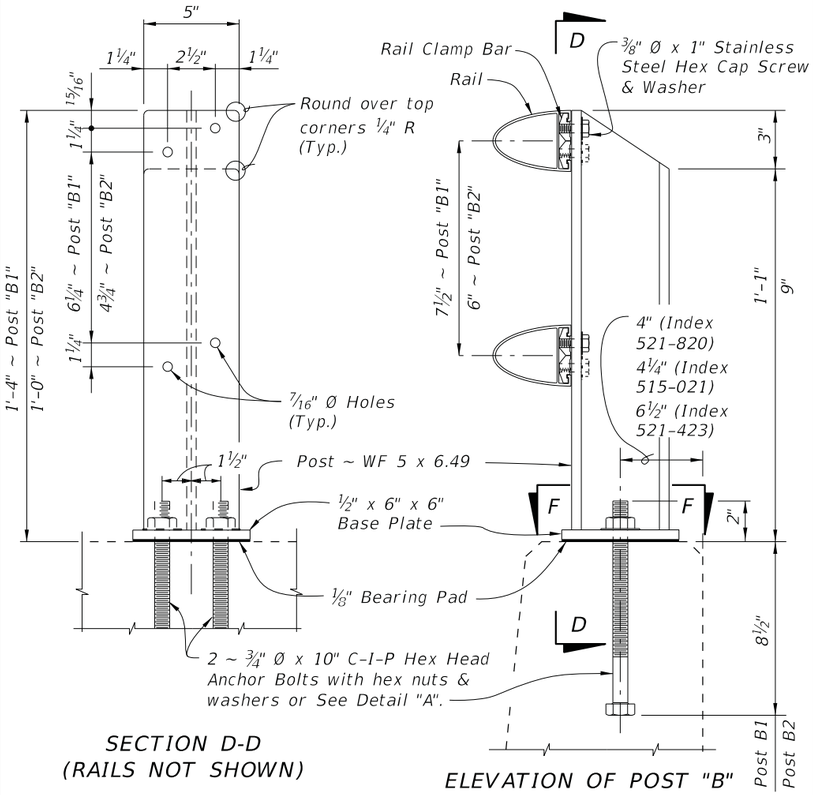

SECTION D-D
(RAILS NOT SHOWN)

ELEVATION OF POST "B"

POST "B1" DETAILS FOR SHBR ON TRAFFIC RAILING (INDEX 521-423) AND FOR PEDESTRIAN/BICYCLE RAILING (PBR) ON CONCRETE PARAPETS (INDEX 521-820)
POST "B2" DETAILS FOR SHBR ON TRAFFIC RAILING (INDEX 521-427 AND 515-021)

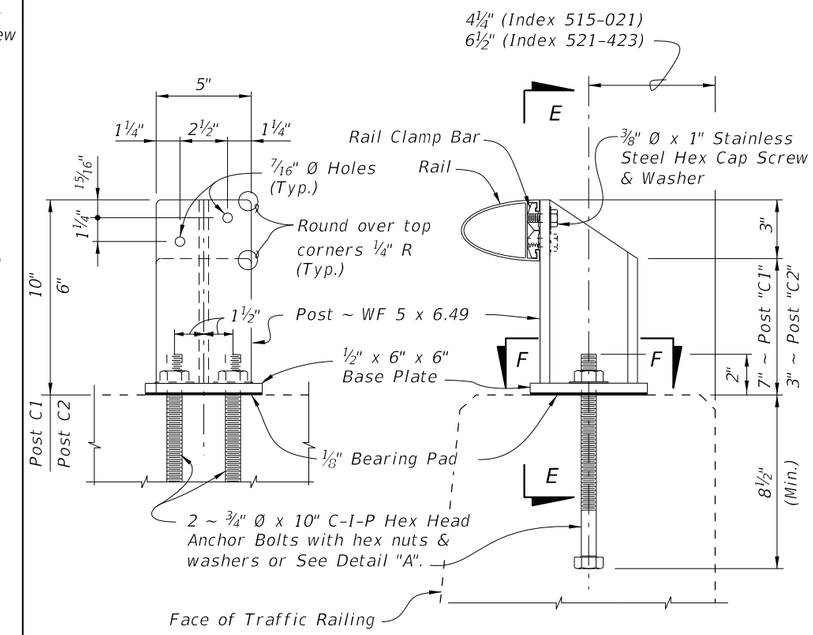

SECTION E-E
(RAIL NOT SHOWN)

ELEVATION
OF POST "C"

POST "C1" DETAILS FOR PEDESTRIAN/BICYCLE RAILING (PBR) ON TRAFFIC RAILINGS (INDEX 521-423)
POST "C2" DETAILS FOR PBR ON TRAFFIC RAILING (INDEX 521-427 & 515-021)

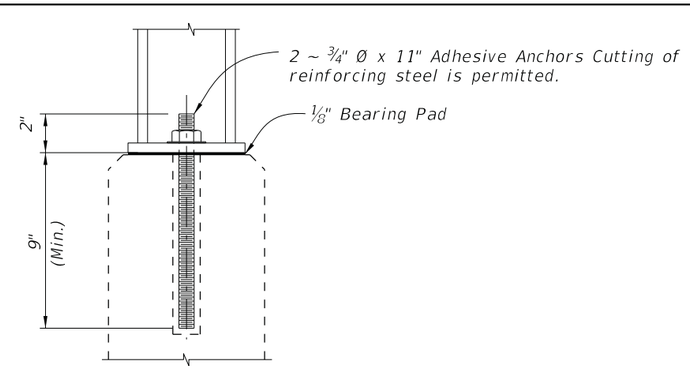

DETAIL "A"
ALTERNATE ANCHOR BOLT
(Concrete Parapet Shown,
Traffic Railings Similar)

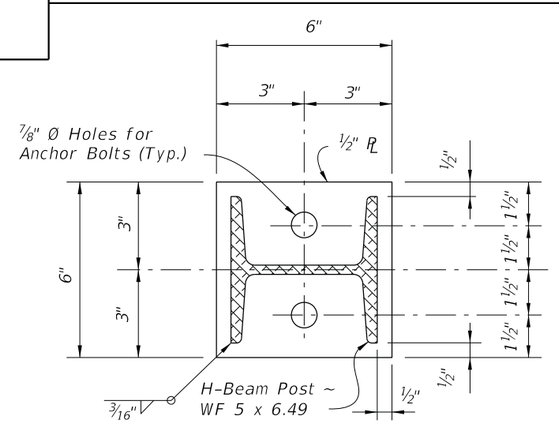

SECTION F-F
BASE PLATE DETAIL

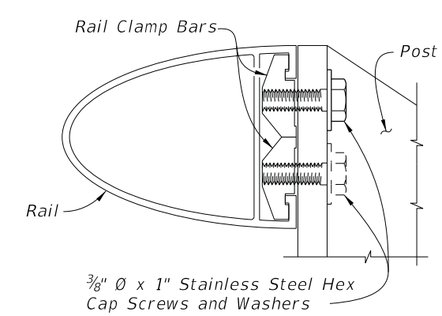

RAIL TO POST CONNECTION DETAIL

CROSS REFERENCES:

For post spacing on Concrete Parapets see Index 521-820.

For post spacing on Traffic Railings see Index 515-021.

For Rail Details see Sheet 2.

For Railing Notes and Tapered End Transition Details see Sheet 3.

10/6/2022 11:21:03 AM

LAST REVISION	REVISION	DESCRIPTION:			INDEX	SHEET
11/01/17			FY 2023-24 STANDARD PLANS	PEDESTRIAN/BICYCLE BULLET RAILING DETAILS	515-022	1 of 3

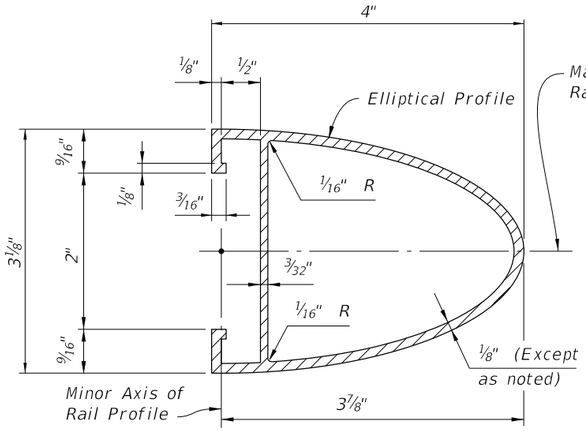

SECTION A-A
TYPICAL SECTION THRU RAIL

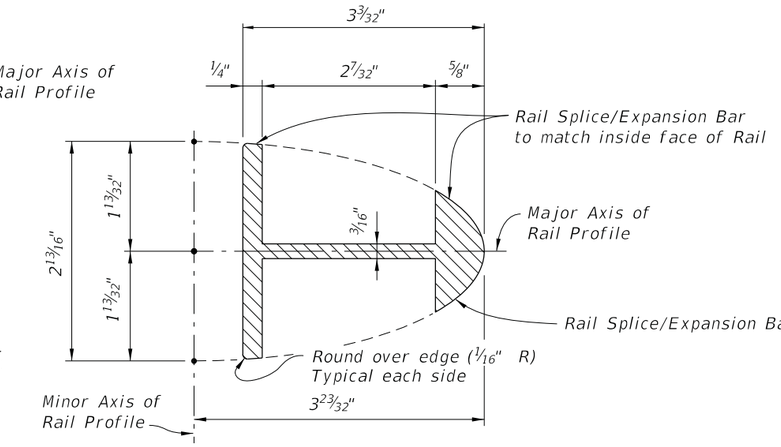

SECTION B-B - RAIL SPLICE/EXPANSION BAR
(Rail not shown for clarity)

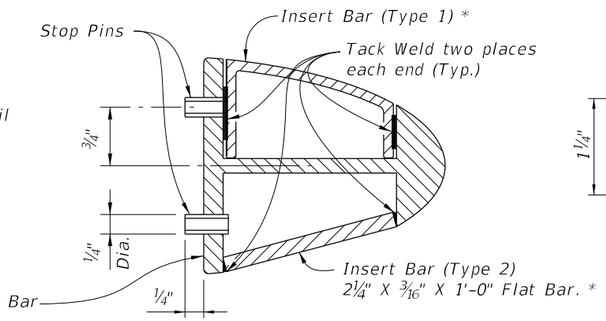

SECTION C-C
RAIL SPLICE/EXPANSION
BAR ASSEMBLY

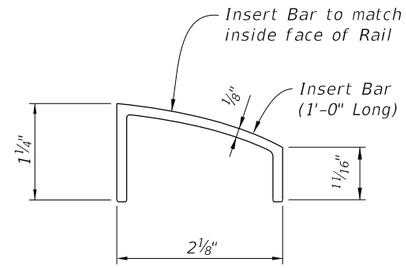

INSERT BAR DETAIL (TYPE 1)

* Use of either Type 1 or Type 2 Insert Bars is at the option of the Contractor.

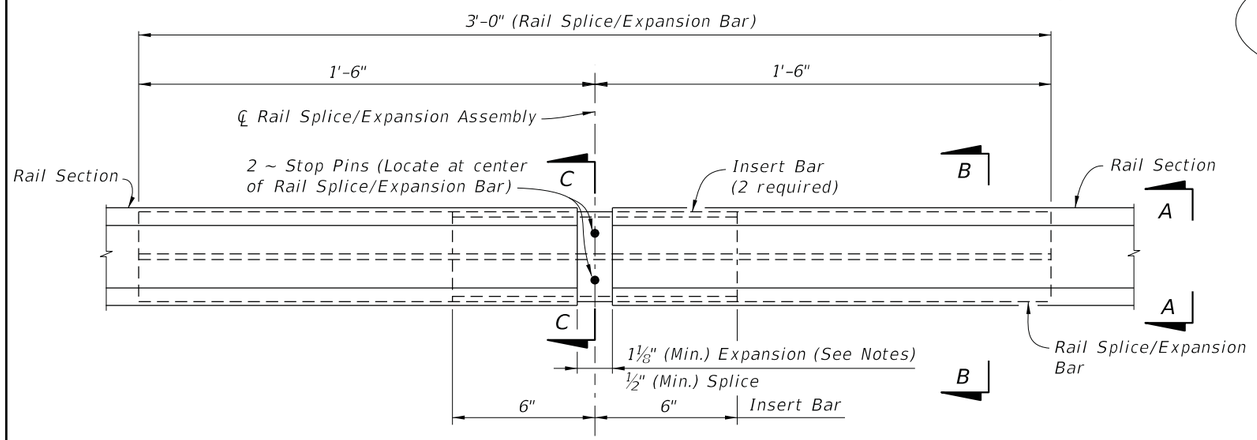

RAIL SPLICE/EXPANSION ASSEMBLY DETAIL

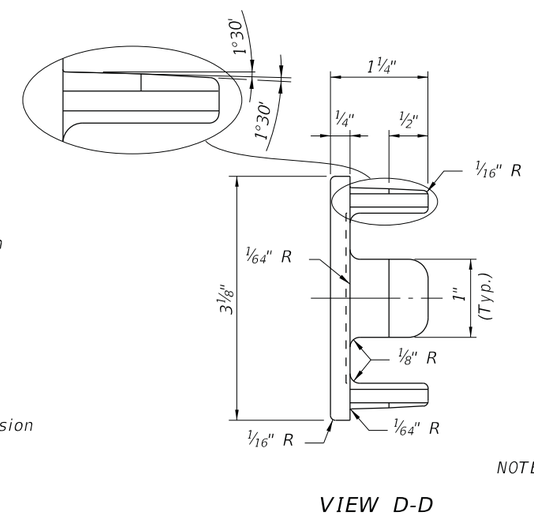

VIEW D-D

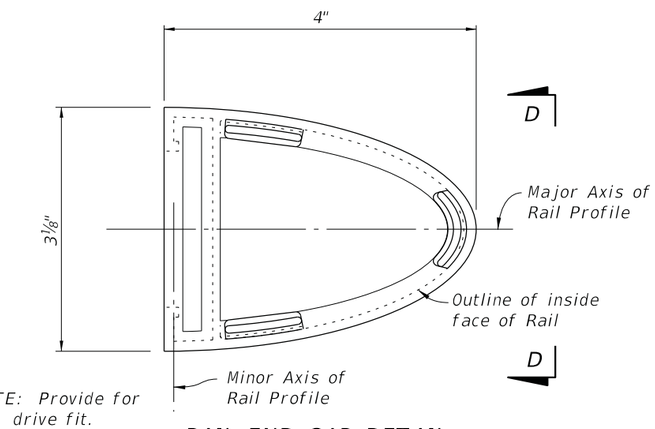

NOTE: Provide for drive fit.

RAIL END CAP DETAIL

CROSS REFERENCE:
For Notes and Tapered End Transition Details, See Sheet 3.

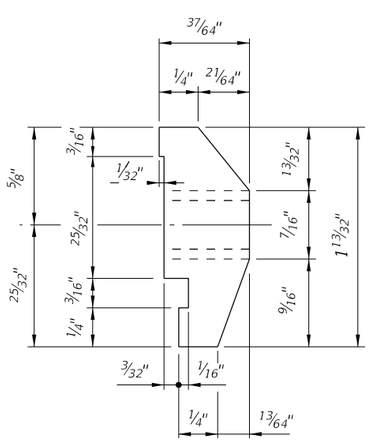

VIEW E-E

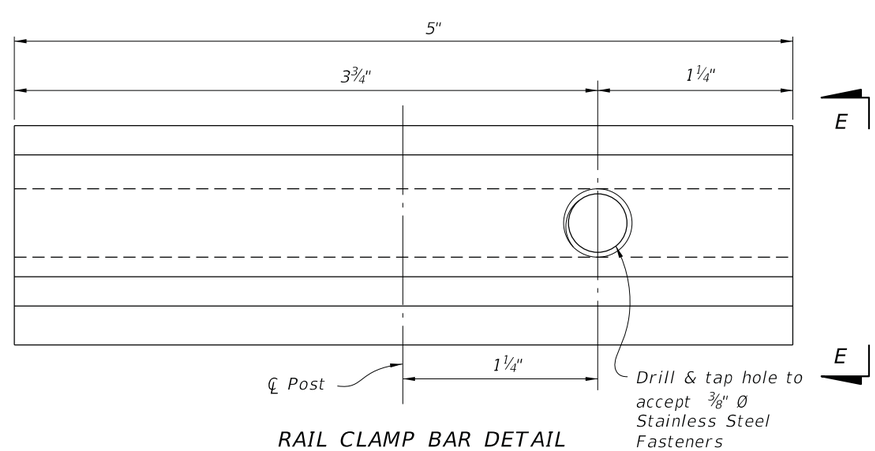

RAIL CLAMP BAR DETAIL

LAST REVISION	REVISION	DESCRIPTION:			INDEX	SHEET
07/01/14			FY 2023-24 STANDARD PLANS	PEDESTRIAN/BICYCLE BULLET RAILING DETAILS	515-022	2 of 3

10/6/2022 11:21:03 AM

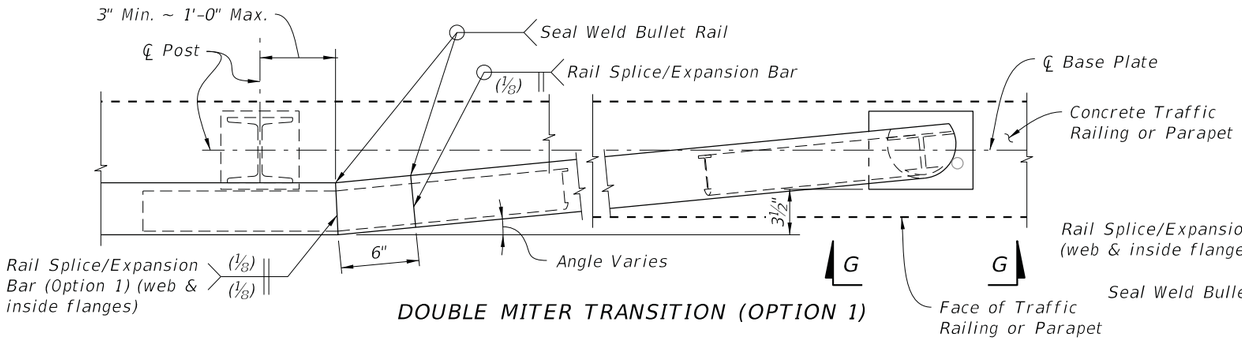

DOUBLE MITER TRANSITION (OPTION 1)

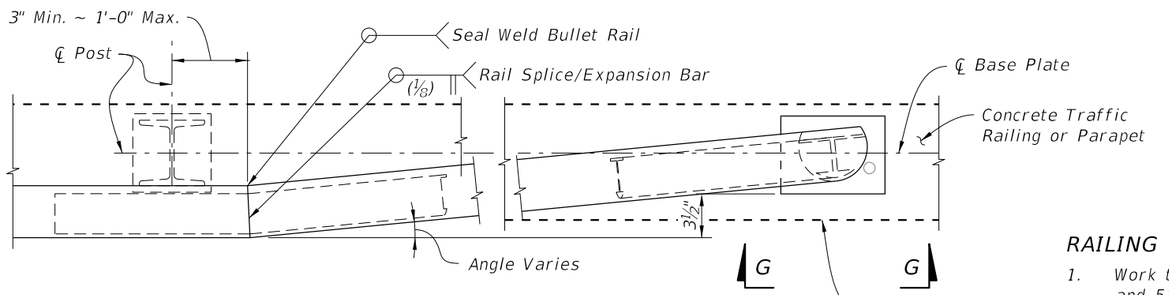

COMPOUND MITER TRANSITION (OPTION 2)

PARTIAL PLAN OF TAPERED END TRANSITIONS

(Single Rail Shown, Double or Triple Rail Similar)

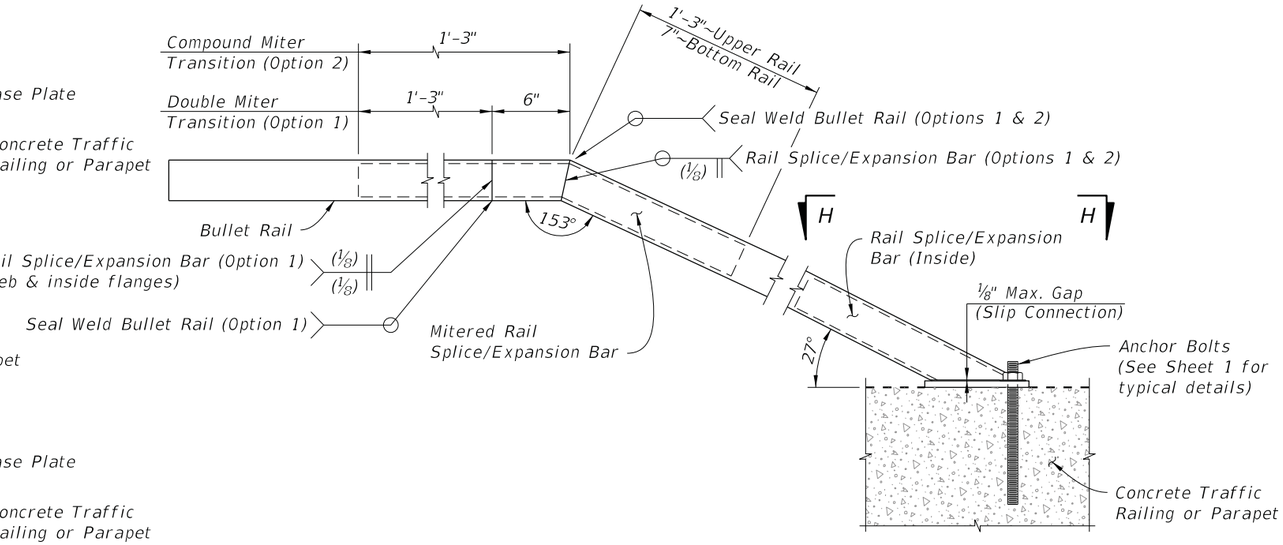

ELEVATION OF TAPERED END TRANSITION
(Single Rail Shown, Double or Triple Rail Similar)

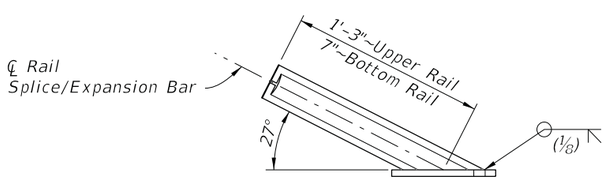

VIEW G-G TRANSITION BASE PLATE
(Bullet Rail not shown for Clarity)

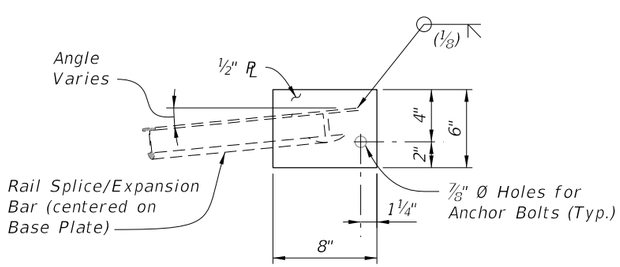

VIEW H-H TRANSITION BASE PLATE
(Bullet Rail not shown for Clarity)

RAILING NOTES:

1. Work this Index with Index 521-423, 521-427, 521-428, 521-820 and 515-021 and Specification Section 515.
2. Shop Drawings: Submit shop drawings prior to fabrication.
   A. Include post and rail splice/expansion assembly location for curved alignments with radii < 40 feet and for all end terminations.
3. Materials:
   A. Supply Aluminum materials In accordance with Specification Section 965 and the following:
      Wrought Aluminum Post: ASTM B221, Alloy 6061-T6 or 6351-T5
      Rail End Cap: ASTM B26 sand cast aluminum alloy 356.0-F
      Plate and Bars: ASTM B209 Alloy 6061-T6
      Rails: ASTM B221 Alloy 6061-T6 or 6351-T5.
      Stop Pins: Press-fit aluminum or stainless steel pins or tubes
   B. Stainless Steel Fasteners: ASTM F-593, Alloy Group 2 (316).
   C. Bearing Pads: Plain or Fiber Reinforced meeting Specification Section 932 for Ancillary Structures.
   D. Anchor Bolts: Galvanized ASTM A307 Grade 36 Hex Head. Galvanized ASTM 1554 Grade 55 Threaded rods for Adhesive Anchors.
4. Layout:
   A. Posts shall be uniformly spaced with reasonable consistency.
   B. Tapered End Transitions are required at the terminus of the approach ends of Bullet Railing mounted on a Traffic Railing. Bullet Railings on concrete parapets shielded by a traffic railing do not require Tapered End Transitions unless noted otherwise in the Plans.
   C. Adjust post spacing's to avoid parapet obstacles, such as armor expansion plates, by 9 inches minimum.
   D. Rails shall be continuous over a minimum of 3 posts, except that lengths less than 12 feet need only be continuous over 2 posts.
   E. Space splices at 40 feet maximum. Splice all rails in a given railing section at about the same center line.
   F. Provide rail expansion assemblies in panels between posts on either side of a bridge expansion joint. Rail expansion assemblies are similar to the rail splice assemblies with increased space at the expansion assembly to allow for movement equal to 1.5 times the bridge joint opening or 1" greater than the expected joint movement.
5. Installation:
   A. Set rails near bridge expansion joints to allow for expected movement.
   B. Cutting of reinforcing steel is permitted for post installed anchors.
6. Payment: Includes the full cost of installed bullet railing. Cost of the Concrete Parapet or Traffic Railing is separate.

10/6/2022 11:21:04 AM

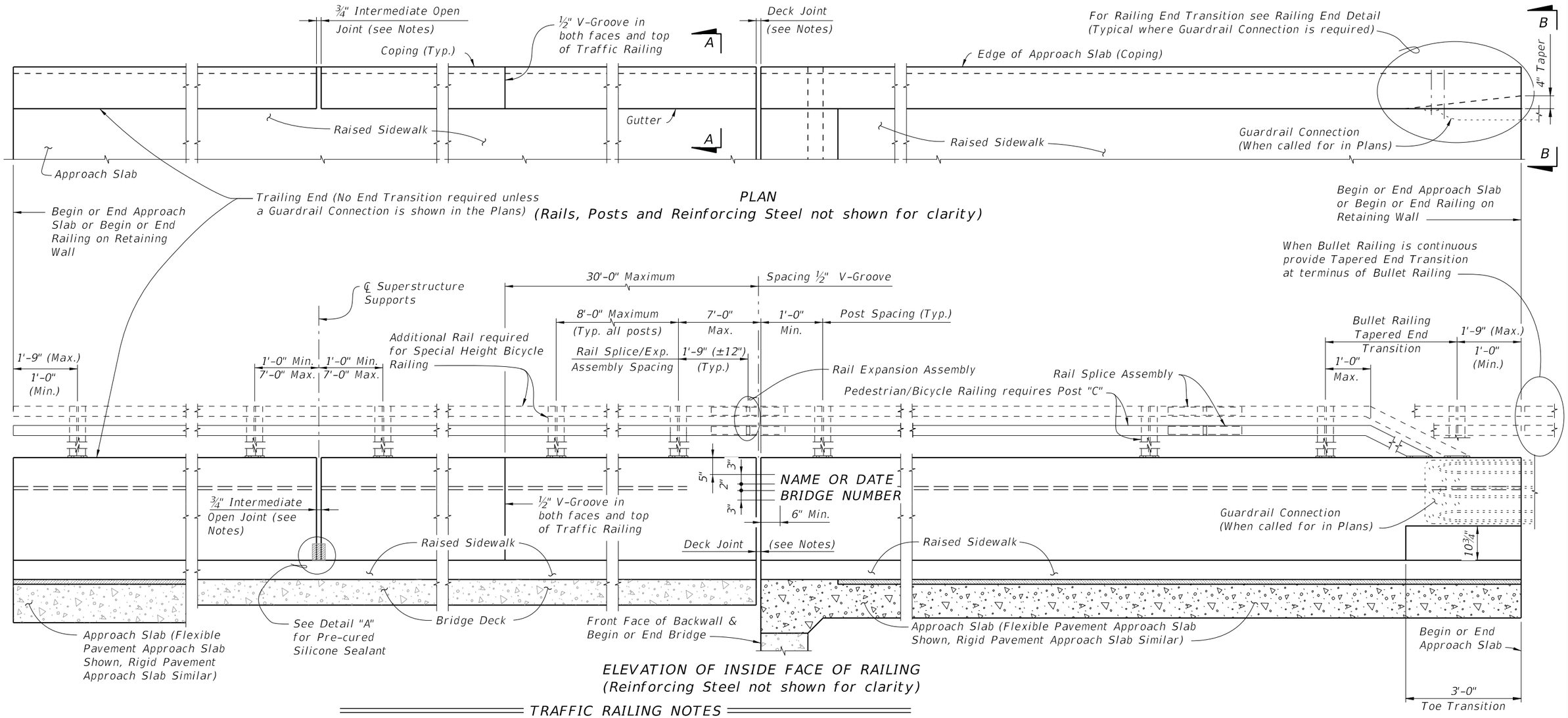

ELEVATION OF INSIDE FACE OF RAILING
(Reinforcing Steel not shown for clarity)

TRAFFIC RAILING NOTES

1. Materials: See Structures Plans, General Notes
2. Guardrail Connection Details: See Index 536-001
3. Traffic Railings may be constructed perpendicular to the sidewalk surface.
   If an adjoining railing is constructed plumb, transition the end of the Traffic Railing from perpendicular to plumb over a minimum distance of 20'-0". The cost of all modifications will be at the Contractor's expense.
4. Name, Date & Bridge Number: Place the Name and Bridge Number on the Traffic Railing on the driver's right side when approaching the bridge. Place the Date on the driver's left side when approaching the bridge. Use the Name as shown in the General Notes of the Structures Plans. The Date is the year the bridge is completed. For a widening when the existing railing is removed, use both the date on the removed rail and the year of the widening. Form letters and figures with ⅜" V-Grooves using preformed letters and figures. Black plastic letters and figures 3" tall may be used, if approved by the Engineer.
5. Open Joints: See the Superstructure Plans, Approach Slab and Retaining Wall Sheets for Deck Joint dimensions and orientation. Provide Open Railing Joints matching the dimensions of the Deck Joint at Deck Expansion Joint locations.
   A. For treatment of railings on skewed bridges see Sheet 3.
6. Open Joints: Provide ¾" Open Joints at:
   A. Superstructure supports where the slab is continuous.
   B. At ends of approach slabs when adjacent to retaining walls and at expansion joints on retaining wall junction slabs.
7. V-Grooves: Construct ½" V-Grooves plumb. Space V-Grooves equally between ¾" Open Joints and/or Deck Joints and the at V-Groove locations on the Retaining Wall footing/junction slabs.
8. Barrier Delineators: Install Barrier Delineators on top of the Traffic Railing 2" from the face of the traffic side in accordance with Specification Section 705. Match the Barrier Delineator to the color (white or yellow) of the near edgeline.
9. For embedded conduit and junction boxes see Index 630-010.
10. For Traffic Railings with Pedestrian/Bicycle Bullet Railings see Index 515-021 and 515-022 for Notes, Details and post spacing.

CROSS REFERENCE:
For Section A-A and View B-B, see Sheet 2.
For Detail "A" see Sheet 3.

10/6/2022 11:23:58 AM

LAST REVISION	REVISION	DESCRIPTION:			INDEX	SHEET
11/01/20			FY 2023-24 STANDARD PLANS	TRAFFIC RAILING - (32" VERTICAL SHAPE)	521-423	1 of 3

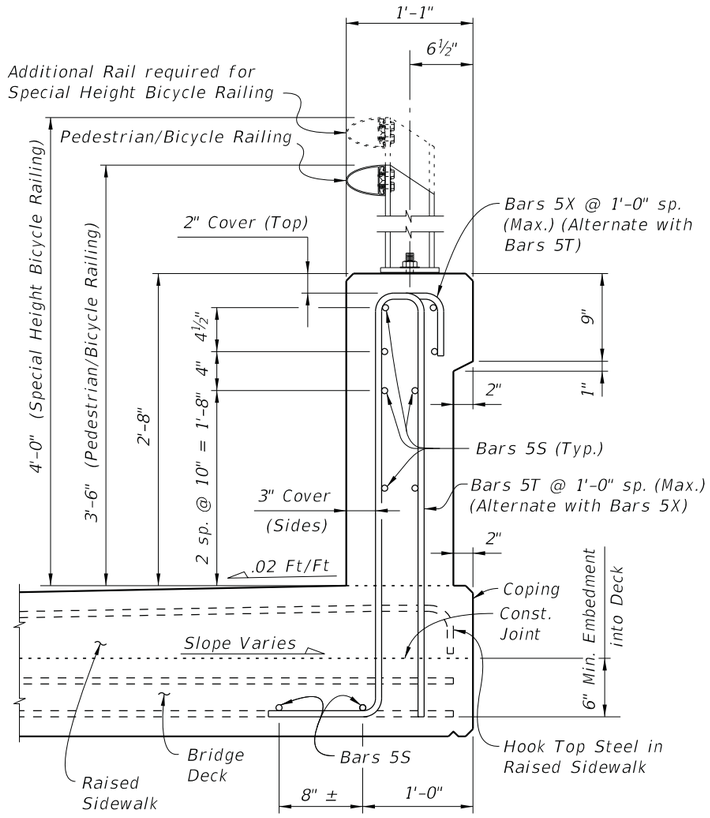

SECTION A-A
TYPICAL SECTION THRU TRAFFIC RAILING
(Section Thru Bridge Deck shown)

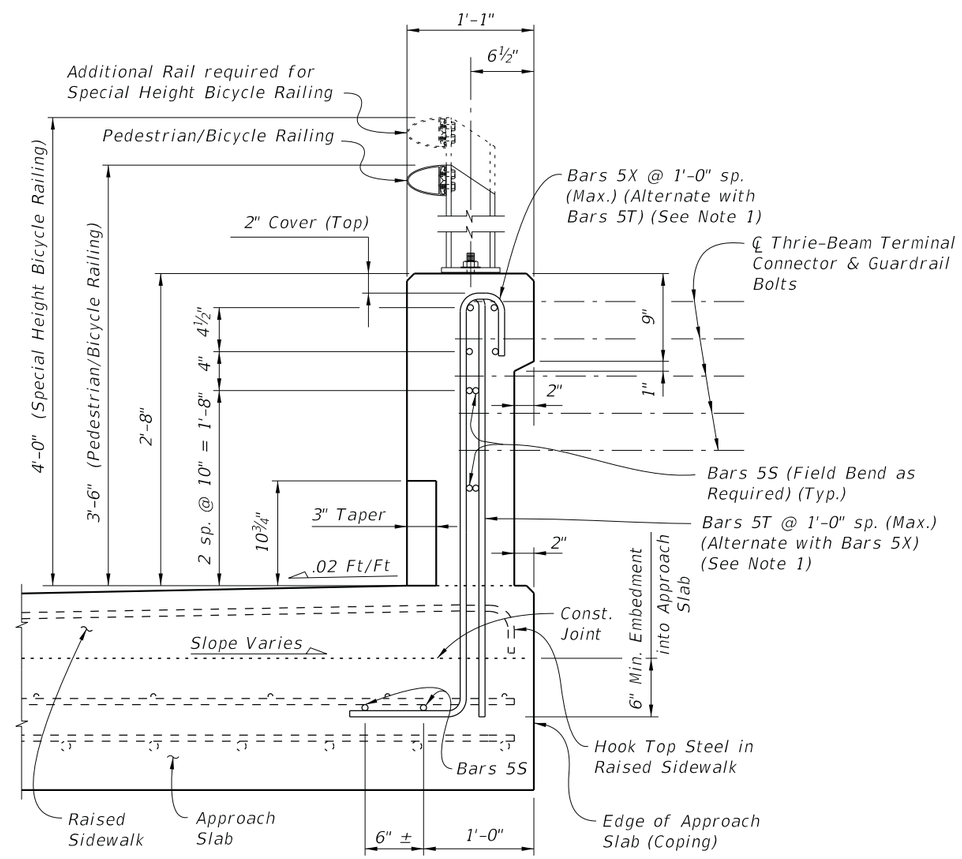

VIEW B-B
APPROACH SLAB END VIEW
OF TRAFFIC RAILING

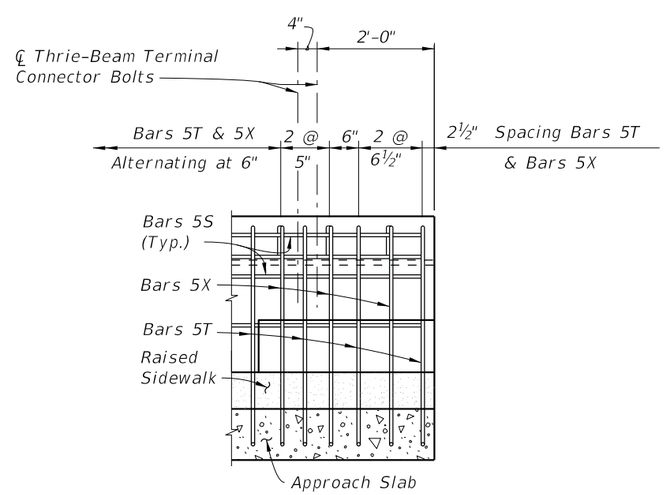

RAILING END DETAIL
(Guardrail Not Shown For Clarity)

NOTES:

1. Begin placing Railing Bars 5T and 5X on Approach Slab at the railing end and proceed toward Begin or End Bridge to avoid conflict with guardrail bolt holes. If required, adjustments to the bar spacing for Bars 5T and 5X shall be made immediately adjacent to Begin or End Bridge. Cut, shift and rotate Bars 5T and 5X as required to maintain cover in Railing End Transition.

2. Omit Railing End Transition and Guardrail if Concrete Traffic Railing is used beyond the Approach Slab or Retaining Wall. See Structures Plans, Plan and Elevation Sheet and Roadway Plans. If Taper and Railing End Transition is omitted, extend Typical Section to end of the Approach Slab or limiting station on Retaining Wall, and space Bars 5T and 5X at 1'-0" (Typ.)

CROSS REFERENCE:
For location of Section A-A and View B-B see Sheet 1.

NOTE: For Bullet Railing Details, see Index 515-022.

10/6/2022 11:23:59 AM

LAST REVISION	REVISION	DESCRIPTION:			INDEX	SHEET
11/01/17			FY 2023-24 STANDARD PLANS	TRAFFIC RAILING - (32" VERTICAL SHAPE)	521-423	2 of 3

CONVENTIONAL REINFORCING STEEL BENDING DIAGRAMS

BILL OF REINFORCING STEEL		
MARK	SIZE	LENGTH
S	5	As Reqd.
T	5	9'-0"
X	5	5'-10"

ROADWAY CROSS-SLOPE	ØA	
	LOW GUTTER	HIGH GUTTER
0% to 2%	90°	90°
2% to 6%	87°	93°
6% to 10%	84°	96°

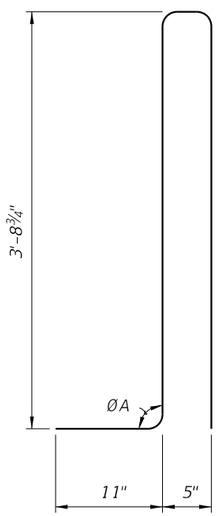

STIRRUP BAR 5T

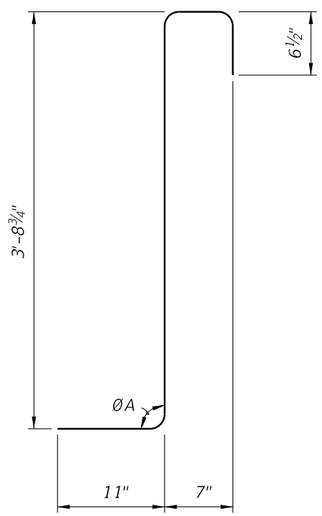

STIRRUP BAR 5X

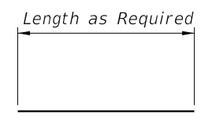

BAR 5S

REINFORCING STEEL NOTES:

1. All bar dimensions in the bending diagrams are out to out.
2. The 3'-8¾" vertical dimensions shown for Bars 5T and 5X are based on a bridge deck with a 6" thick x 6' wide raised sidewalk at low side of deck, 2% deck cross slope and a counter 2% raised sidewalk cross slope. If the raised sidewalk thickness, width or cross slopes vary from the above amounts, adjust these vertical dimensions accordingly to achieve a 6" minimum embedment into the bridge deck.
3. The reinforcement for the railing on a Retaining Wall shall be the same as detailed with ØA = 90°.
4. All reinforcing steel at the open joints shall have a 2" minimum cover.
5. Bars 5S may be continuous or spliced at the construction joints. Bar splices for Bars 5S shall be a minimum of 2'-2".
6. The Contractor may utilize Welded Wire Reinforcement (WWR) when approved by the Engineer. WWR must consist of Deformed wire meeting the requirements of Specification Section 931.

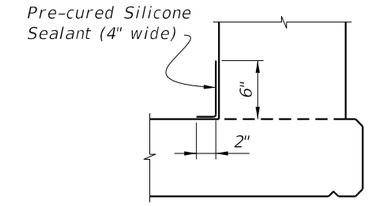

DETAIL "A" - SECTION
AT INTERMEDIATE OPEN JOINT

INTERMEDIATE JOINT SEAL NOTES:

1. At Intermediate Open Joints, seal the lower 6" portion of the open joint with Pre-cured Silicone Sealant in accordance with Specification Section 932.
2. Apply sealant prior to any Class V finish coating and remove all curing compound and loose material from the surface prior to application of bonding agent.
3. The cost of the Pre-cured Silicone Sealant shall be included in the Contract Unit Price for the Traffic Railing.

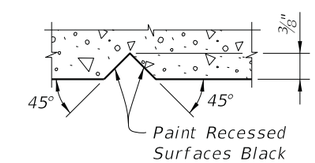

SECTION THRU RECESSED "V" GROOVE
TO FORM INSCRIBED LETTERS AND FIGURES

ESTIMATED TRAFFIC RAILING QUANTITIES		
ITEM	UNIT	QUANTITY
Concrete	CY/LF	0.095
Reinforcing Steel	LB/LF	25.90

(The above quantities are based on a 6" thick x 6' wide raised sidewalk at low side of deck, 2% deck cross slope and counter 2% sidewalk cross slope.)

10/14/2022 8:10:06 AM

SHEET	CONTENTS
1	General Notes; Index Contents
2	General, TL-3 Guardrail - Installed Plan and Elevation
3	Low-Speed, TL-2 Guardrail - Installed Plan and Elevation
4	W-Beam and Thrie-Beam Panel Details
5	Post and Offset Block Details
6	Guardrail Sections - Heights and Adjacent Slopes
7	End Treatment - Approach Terminal Geometry, Parallel
8	End Treatment - Approach Terminal Geometry, Curbed and Double Faced
9	End Treatment - Trailing Anchorage
10	End Treatment - Component Details
11	End Treatment - Controlled Release Terminal (CRT) System
12	Layout for CRT System - Side Roads and Driveways
13	Approach Transition Connection to Rigid Barrier - General, TL-3
14	Approach Transition Connection to Rigid Barrier - General, TL-3 - Curb Connections
15	Approach Transition Connection to Rigid Barrier - Low-Speed, TL-2
16	Approach Transition Connection to Rigid Barrier - Low-Speed, TL-2 - Curb Connections
17	Approach Transition Connection to Rigid Barrier - Details
18	Approach Transition Connection to Rigid Barrier - Double Faced Guardrail
19	Layout to Rigid Barrier - Approach Ends
20	Layout to Rigid Barrier - Approach Ends with Double Faced Guardrail Layout to Rigid Barrier - Trailing Ends Trailing End Transition Connection to Rigid Barrier
21	Rub Rail Details
22	Pedestrian Safety Treatment - Pipe Rail
23	Modified Mount - Special Steel Post for Concrete Structure Mount; Modified Mount - Encased Post for Shallow Mount; Modified Mount - Frangible Leave-Out for Concrete Surface Mount
24	Barrier Delineators - Post Mounted; Clear Space - Reduced Post Spacing for Hazards; ⅝" Button-Head Bolt System

GENERAL NOTES:

1. INSTALLATION: Construct guardrail in accordance with Specification 536.

   This Index, along with the plans and the manufacturers' drawings on the Approved Products List (APL), is sufficiently detailed for installation of General Guardrail, Low-Speed Guardrail, End Treatment assemblies, and their connecting options shown herein. This precludes requirements for shop drawing submittals unless otherwise specified in the plans.

2. COMPATIBILITY: The General Guardrail in this Index is based on the Midwest Guardrail System (MGS) design, with an approximate height of 31" at the top of the Panel (2'-1" mounting height at vertical ℄ of Panel) and a midspan panel splice as shown on Sheet 2. Guardrail components included on the APL, which are compatible with this Index, may also be identified as 31" or MGS Guardrail.

3. STANDARD COMPONENTS: Standard guardrail components, including posts, panels, and bolt systems, are based on the Task Force 13 Publication: Guide to Roadside Hardware Components (http://tf13.org/Guides/componentGuide/).

4. BUTTON-HEAD BOLTS: Install Button-Head Bolts where indicated using bolts, nuts, and washers as defined on Sheet 24. Place washers under nuts. Do not place washers between bolt heads and panels, except where otherwise shown in this Index.

5. HEX-HEAD BOLTS: Install Hex-Head Bolts where indicated using bolts, nuts, and washers in accordance with material properties of Specification 967. Place washers under nuts.

6. MISCELLANEOUS ASPHALT PAVEMENT: Install Miscellaneous Asphalt Pavement where indicated with a tolerance of ± ½" depth and in accordance with Specification 339.

7. ADJACENT SIDEWALKS & SHARED USE PATHS: When guardrail posts are placed within 4'-0" of a sidewalk or shared use path, use timber posts, or use steel posts only if treated with Pipe Rail as shown on Sheet 22.

   When timber posts are used, one of the following safety treatments is required for the bolt(s) protruding from the back face of the posts:
   a. After tightening the nut, trim the protruding post bolt flush with the nut and galvanize per Specification 562.
   b. Use post bolts 15" in length and countersink the washer and nut between 1" and 1½" deep into the back face of the post.
   c. Use 15" post bolts with sleeve nuts and washers.

   When End Treatment posts are within 4'-0" of a sidewalk or shared use path, steel posts are not permitted within the End Treatment segment. Terminate the Pipe Rail outside of End Treatment segments, as noted per Sheet 22.

8. NESTED W-BEAM: Where called for in the plans, install two W-Beam Panels mounted flush per location, securing all panels with Button-Head Bolts threaded through aligned slots and holes. 2" Button-Head Bolts are permitted for panel splice locations.

9. CONNECTION TO RIGID BARRIER: The connections to Rigid Barrier in this Index only apply to newly constructed bridge Traffic Railing and Concrete Barrier or where the complete Approach Transition Connection to Rigid Barrier shown herein can be installed without conflicting with existing Traffic Railings, structures, or approach slabs.

   For connecting guardrail to existing bridge Traffic Railings, see Indexes 536-002, 521-404, and 521-405.

10. CONNECTION TO EXISTING GUARDRAIL: Where a transition to existing guardrail at 27" height is required, linearly transition the new guardrail height over a distance ranging from 25'-0" to 31'-3". Height transitions must occur outside of End Treatment and Approach Transition segments.

    Provide an immediate transition to the required midspan panel splice using the available panel options on Sheet 4 (9'-4½" or 15'-7½" panel). Alternatively, this transition to midspan panel splice may be achieved by installing a single reduced post spacing of 3'- 1½" within the new guardrail, immediately adjacent to the connection location.

11. PLANS CALLOUTS: Begin/End Station labels are shown throughout this Index as they correspond to the station and offset callouts specified in the plans.

    In the plans, Begin/End Guardrail Station refers to the General TL-3 Guardrail Pay Item, and it may be abbreviated as Begin/End GR. Station. Where the Low-Speed TL-2 Guardrail Pay Item is specifically required, the callout in the plans will then specify Begin/End TL-2 GR. Station.

12. QUANTITY MEASUREMENT: Measure guardrail and corresponding components as defined in Specification 536. The Guardrail length is measured along the centerline of installed Panels, between the points labeled Begin/End Guardrail Station shown on the following Index Sheets and defined in the plans (typically measured from the ℄ of the panel's post bolt slots at the approach/trailing ends).

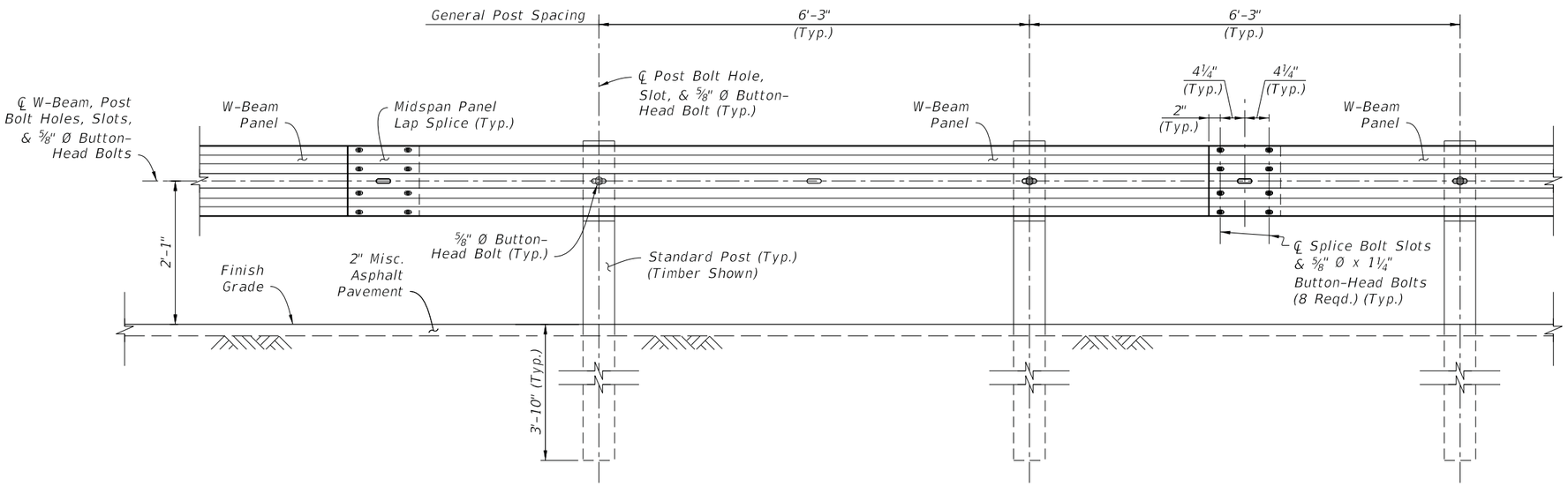

GENERAL GUARDRAIL
INSTALLED ELEVATION

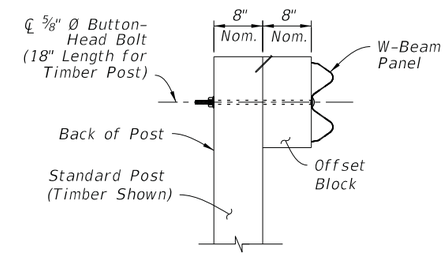

INSTALLED SECTION

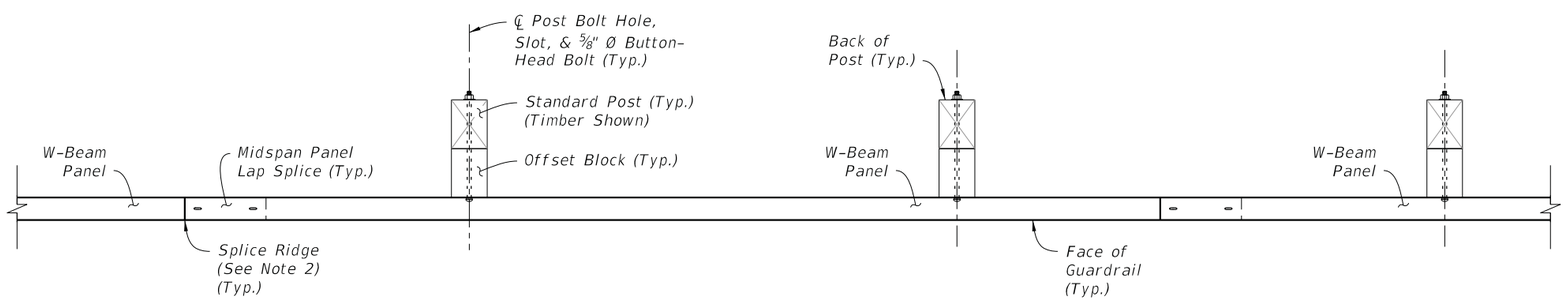

INSTALLED PLAN

NOTES:

1. GENERAL: Install the General Guardrail configuration where indicated in the plans. This may include tapered segments if called for in the plans.

   Use 12'-6" or longer W-Beam Panels. A single 6'-3" Panel may be used at the end of the run to meet the nominal Begin/End Guardrail Sta. requirements.

   Where a differing guardrail configuration is required for constructability beyond the options shown in this Index or the plans, obtain approval from the Engineer prior to installation.

2. MIDSPAN PANEL LAP SPLICE: For proper structural function, place all Lap Splices at midspan unless otherwise indicated.

   Lap the Panels with the Splice Ridge oriented downstream of the final Direction of Traffic in the nearest traffic lane. For reverse lane conditions, orient the Splice Ridge downstream of the lane direction with the highest traffic volume. Orienting Lap Splices for Temporary Traffic Control phasing is not required.

3. CONNECTION DETAILS: Connections to End Treatments, Approach Transitions, or other segment types are defined in the following Index Sheets, APL Drawings, or the plans.

4. W-BEAM PANEL DETAILS: See Sheet 4.

5. POST & OFFSET BLOCK DETAILS: See Sheet 5.

6. GUARDRAIL SECTIONS: For Sections showing typical mounting heights, grading, and lateral offsets in relation to adjacent roadway features, see Sheet 6.

7. MODIFIED MOUNTS: Where concrete structures, concrete sidewalk, or shallow depth conditions are encountered, see Sheet 23 for additional post mounting options.

8. DEFINED SEGMENTS: The General Guardrail shown provides the base configuration, including Post Spacing and splice locations, for Defined Segment modifications where indicated in the plans and using the Guardrail Types, Sections, and/or hardware as shown in this Index (e.g. Double Faced W-Beam, Deep Posts at Slope Breaks, Pipe Rail, Rub Rail, or Reduced Post Spacing for Hazards).

GENERAL, TL-3 GUARDRAIL DETAILS

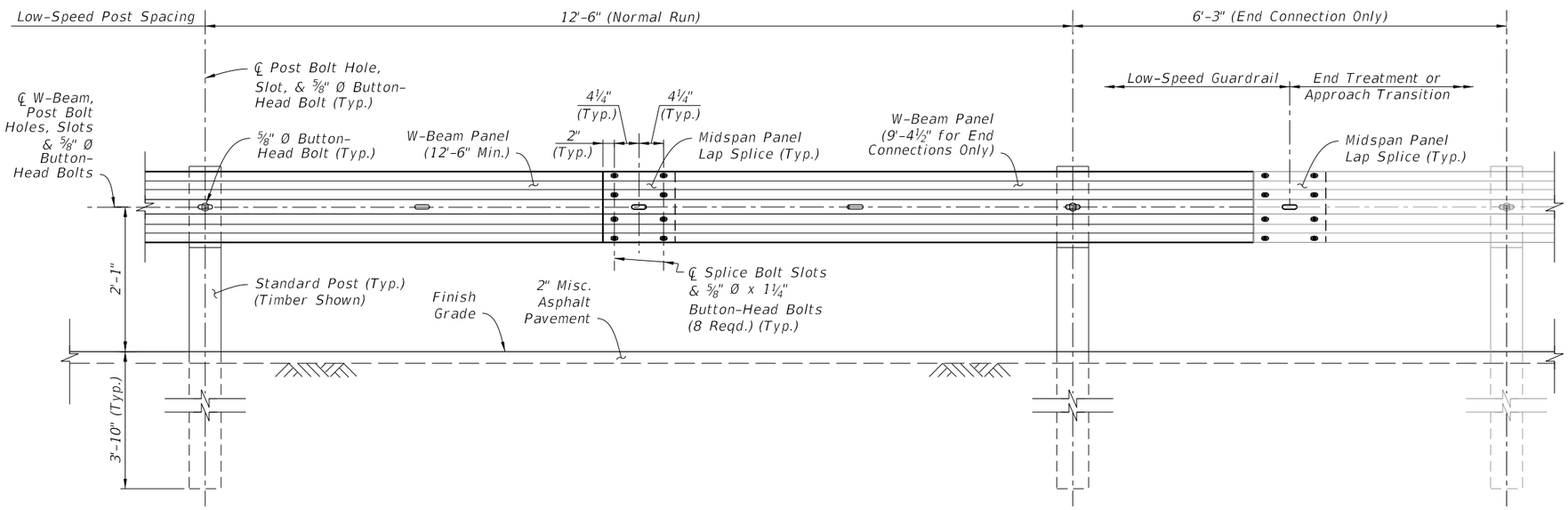

LOW-SPEED GUARDRAIL
INSTALLED ELEVATION

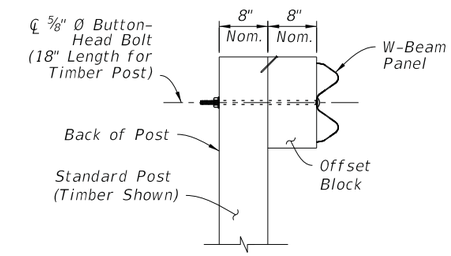

INSTALLED SECTION

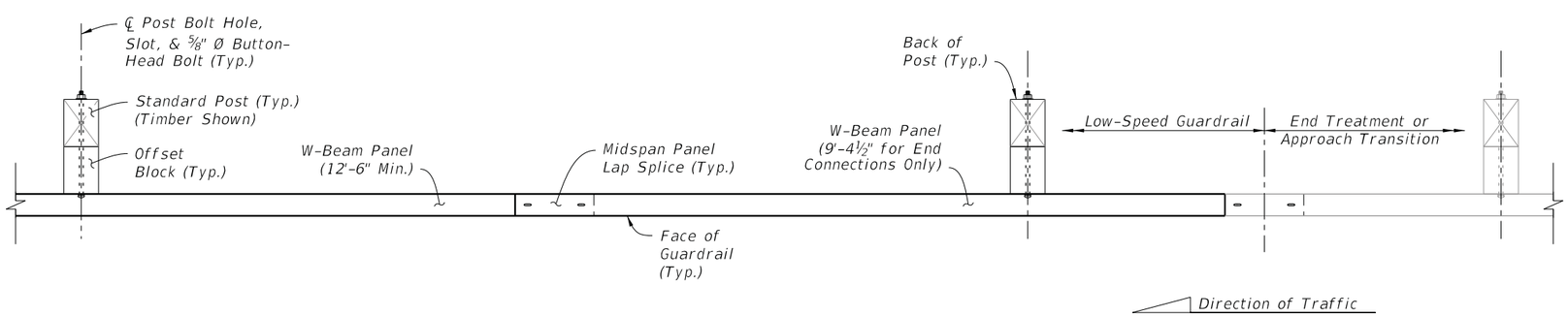

INSTALLED PLAN

NOTES:

1. GENERAL: Install the Low-Speed Guardrail configuration where indicated in the plans. Low-Speed Guardrail may include tapered segments if called for in the plans.

   Use 12'-6" or 25'-0" W-Beam Panels for normal spans, and use 9'-4½" Panels for end connections to adjoining segments as shown. A single 6'-3" Panel may be used at the end of the Low-Speed Guardrail run along with a single reduced 6'-3" post spacing to meet the nominal Begin/End Guardrail Sta. required.

   Where a differing guardrail configuration is required for constructability beyond the options shown in this Index or the Plans, obtain approval from the Engineer prior to installation.

2. MIDSPAN PANEL LAP SPLICE: For proper structural function, place all Lap Splices at midspan unless otherwise indicated.

   Lap the Panels with the Splice Ridge oriented downstream of the final Direction of Traffic in the nearest traffic lane. For reverse lane conditions, orient the Splice Ridge downstream of the lane direction with the highest traffic volume. Orienting Lap Splices for Temporary Traffic Control phasing is not required.

3. CONNECTION DETAILS: Connections to End Treatments, Approach Transitions, or other segment types are defined in the following Index Sheets, APL Drawings, or the plans.

4. W-BEAM PANEL DETAILS: See Sheet 4.

5. POST & OFFSET BLOCK DETAILS: See Sheet 5.

6. GUARDRAIL SECTIONS: For Sections showing typical mounting heights, grading, and lateral offsets in relation to adjacent roadway features, see Sheet 6.

7. MODIFIED MOUNTS: Where concrete structures, concrete sidewalk, or shallow depth conditions are encountered, see Sheet 23 for additional post mounting options.

8. RESTRICTIONS: Low-Speed Guardrail segments are not permitted for use with items including, but not limited to, Double Faced W-Beam, Deep Posts at Slope Breaks, Raised Curb, Pipe Rail, and/or Rub Rail.

LOW-SPEED, TL-2 GUARDRAIL DETAILS

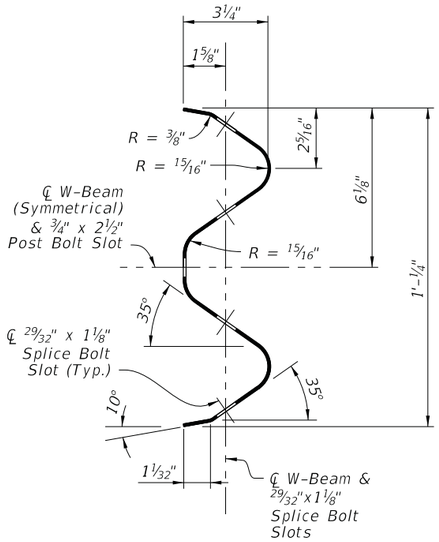

W-BEAM PANEL SECTION

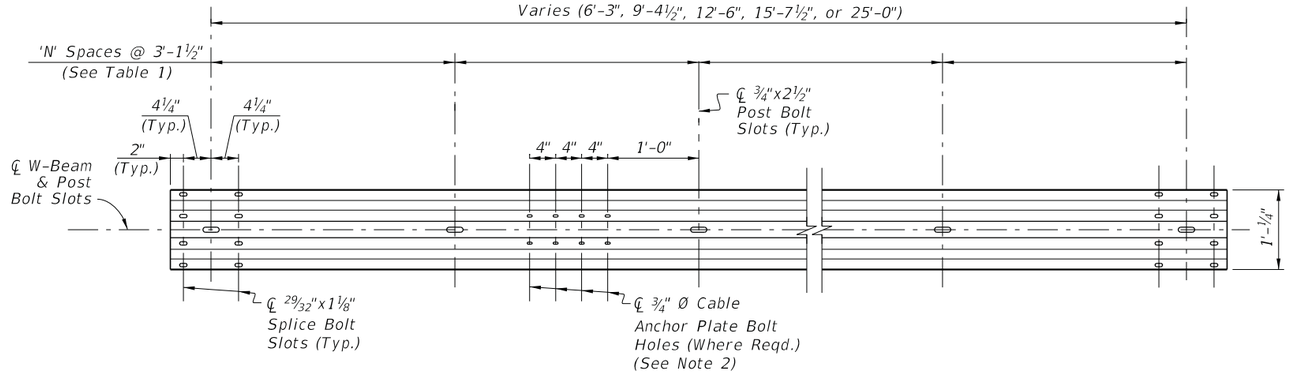

W-BEAM PANEL ELEVATION

PANEL SUMMARY TABLE:

Panel Type	Number of Spaces 'N'	Gauge
6'-3" W-Beam	2	12
9'-4½" W-Beam	3	12
12'-6" W-Beam	4	12
15'-7½" W-Beam	5	12
25'-0" W-Beam	8	12
3'-1½" Thrie-Beam	1	10
6'-3" Thrie-Beam	2	12
12-6" Thrie-Beam	4	12
25-0" Thrie-Beam	8	12
Thrie-Beam Trans.	2	10

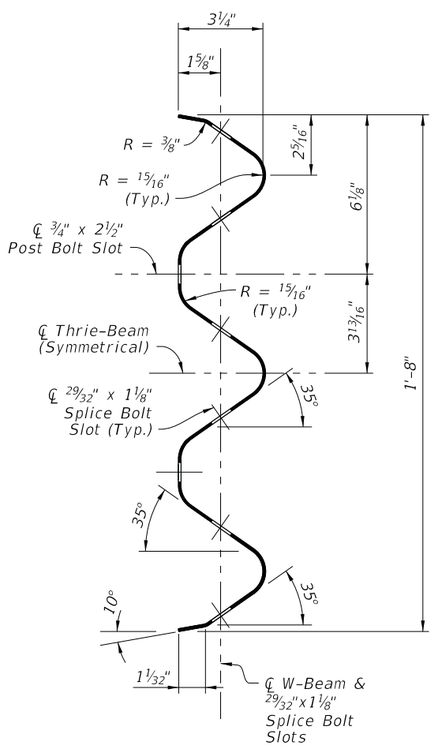

THRIE-BEAM PANEL SECTION

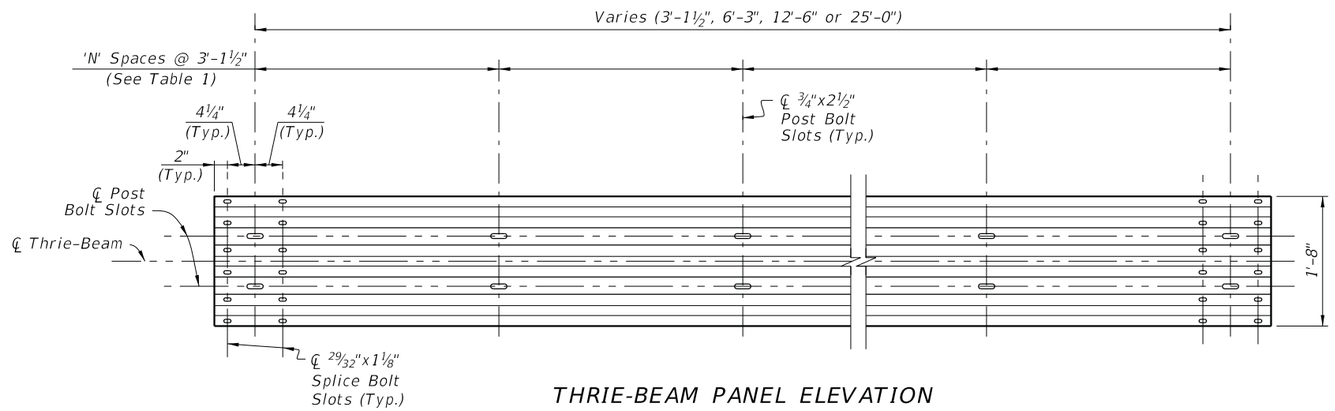

THRIE-BEAM PANEL ELEVATION

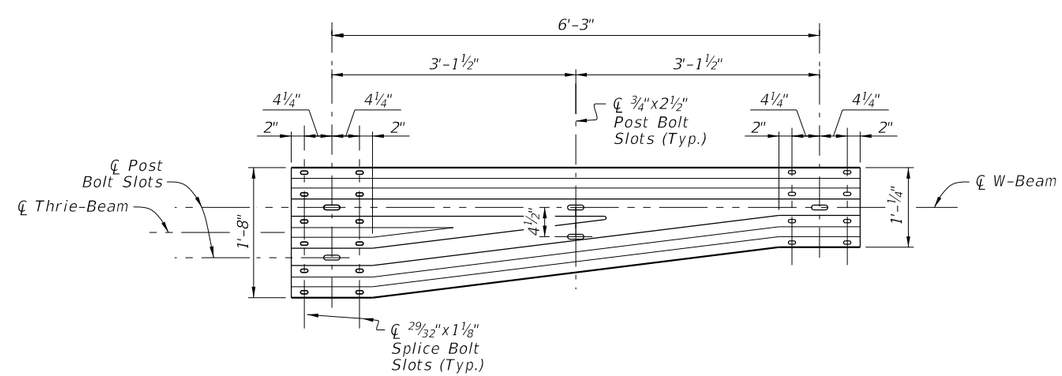

THRIE-BEAM TRANSITION PANEL ELEVATION
(Reverse Direction Similar by Opposite Hand)

NOTES:

1. MATERIALS:
   Use corrugated steel panels in accordance with Specification 967 and made from either Class A, 12 gauge steel or Class B, 10 gauge steel as specified in the 'Panel Summary Table' above.

2. CABLE ANCHOR PLATE BOLT HOLES:
   Include ¾" Ø Cable Anchor Plate Bolt Holes only where required for installation of the Cable Anchor Plate shown on Sheet 9, 10, & 11.

   29/32" x 1⅛" slots may substitute for the ¾" Ø holes shown.

W-BEAM AND THRIE-BEAM PANEL DETAILS

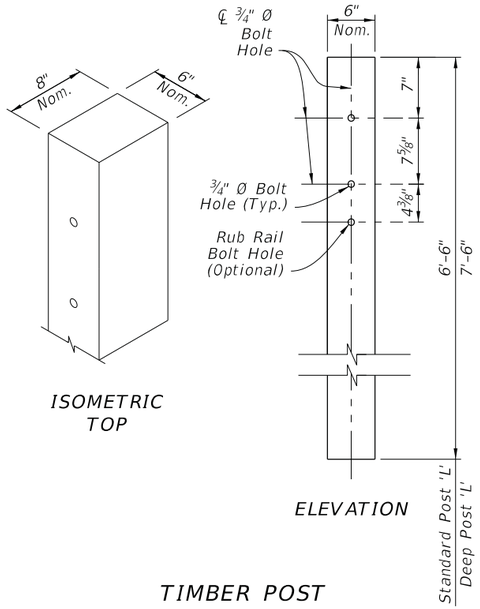

TIMBER POST
(6"X8" Nominal)

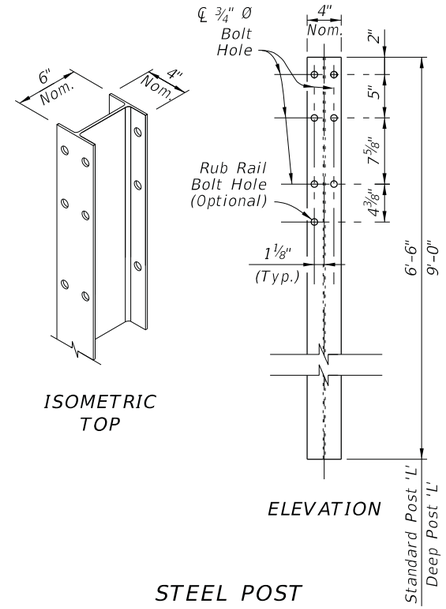

STEEL POST
(W6X8.5 or W6X9)

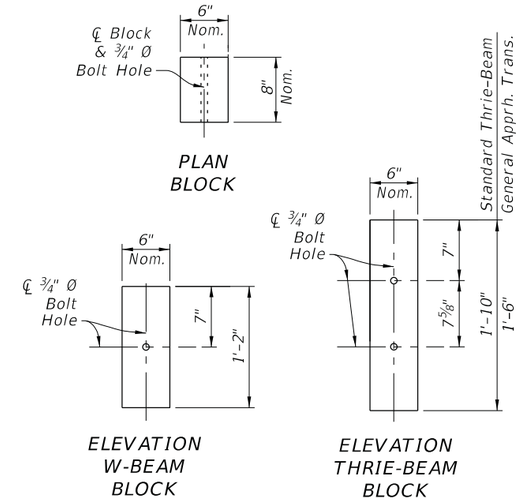

TIMBER OFFSET BLOCK
(6"X8" Nominal)

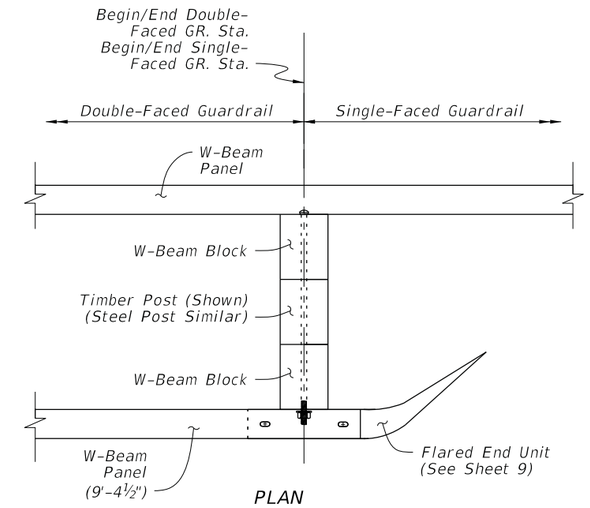

SINGLE-FACED / DOUBLE-FACED
GUARDRAIL CONNECTION

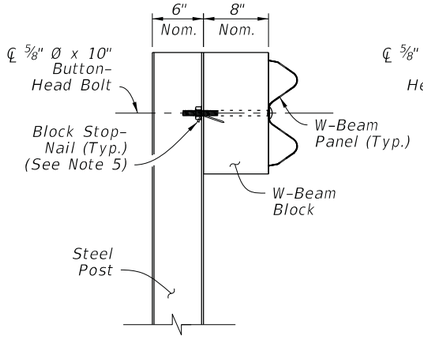

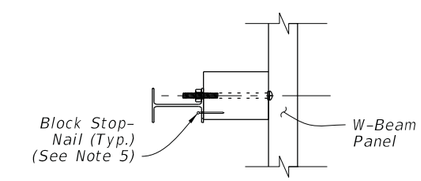

SINGLE-FACED
W-BEAM
STEEL POST

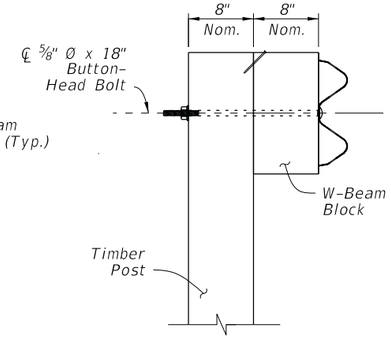

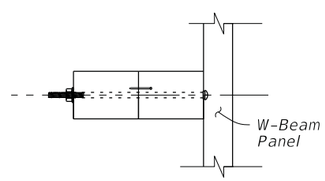

SINGLE-FACED
W-BEAM
TIMBER POST

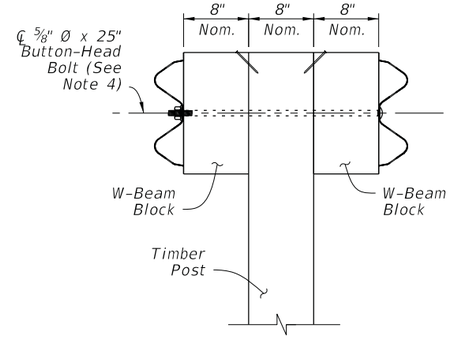

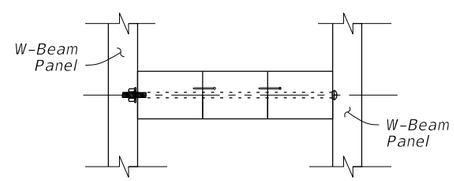

DOUBLE-FACED W-BEAM
TIMBER POST
(Thrie-Beam Similar)
(Steel Post Similar)

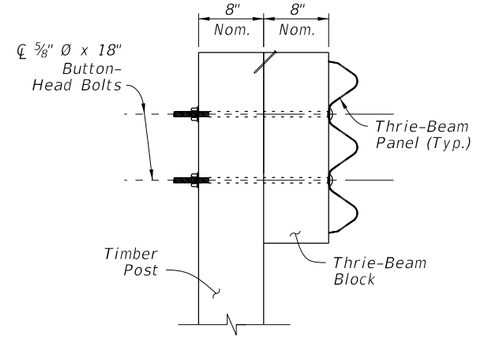

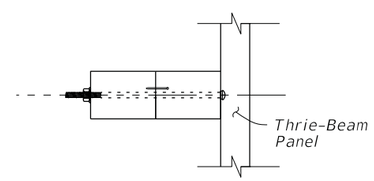

THRIE-BEAM
TIMBER POST
(Steel Post Similar)

NOTES:

1. STANDARD POSTS: Where Standard Posts are called for in this Index, use either a Timber Post or Steel Post at the Length, 'L', shown for Standard Posts. Use a single post material type consistently per each run of guardrail. Only where specified in the Plans, use the Deep Post 'L' for Slope Break Conditions as shown on Sheet 6.
2. OFFSET BLOCKS: For each Panel type, install the corresponding Offset Block type as shown. For General, TL-3 (Single Faced) Approach Transitions only, use the 1'-6" Thrie-Beam Block (See Sheet 13).
3. BOLT HOLES: ¾" Ø Bolt Holes shown in posts within this Index may be substituted with 13⁄16" Ø Bolt Holes.
4. DOUBLE FACED GUARDRAIL: Orient Post Bolts with the Button-Head located on the side nearest the traffic lane. The bolt's threaded portion is not permitted to extend beyond ¾" from the face of the tightened nut; trim the threaded portion as needed and galvanize in accordance with Specification 562.
5. BLOCK STOP-NAIL: Drive one nail per Standard Offset Block as shown to prevent Block rotation. Use steel 3½" Type 16d nails with ASTM A153 hot-dip galvanization. For steel posts, drive the nail through the unused flange Bolt Hole and bend the nail so its head contacts the flange.
6. MATERIALS: Use timber and steel posts and offset blocks in accordance with Specification 967. Composite offset blocks may be substituted as approved on the APL. Use a single offset block type consistently per each run of guardrail. Steel offset blocks are only permitted for Modified Thrie Beam.

POST AND OFFSET BLOCK DETAILS

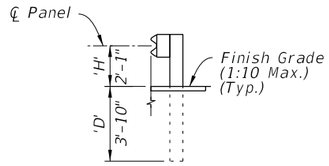

W-BEAM

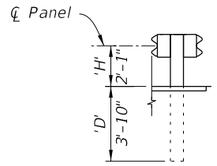

DOUBLE FACED W-BEAM

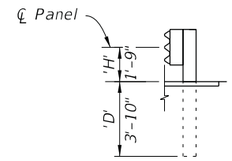

THRIE-BEAM

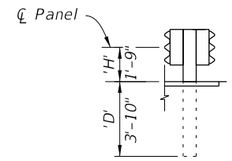

DOUBLE FACED THRIE-BEAM

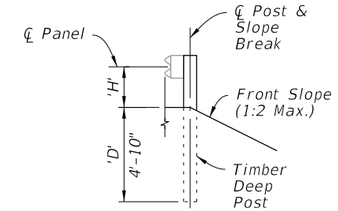

SLOPE BREAK CONDITION TIMBER DEEP POST

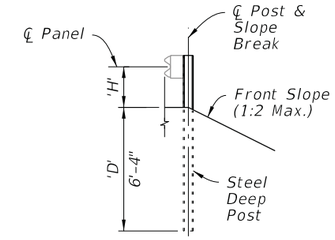

SLOPE BREAK CONDITION STEEL DEEP POST

GUARDRAIL TYPES - MOUNTING HEIGHTS & POST DEPTHS

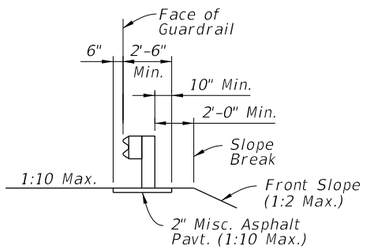

TYPICAL GRADING & PAVT. PLACEMENT DETAIL (See Note 2)

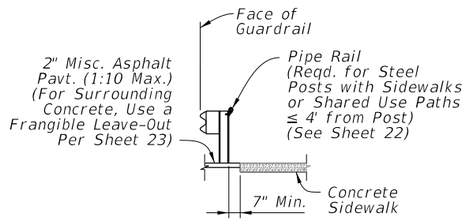

TYPICAL SIDEWALK DETAIL (Work with Other Sections as Reqd.)

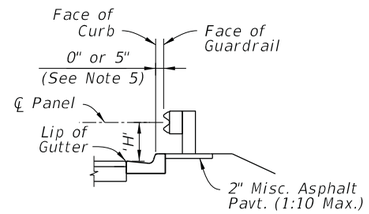

ADJACENT TO CURB (Type F Curb Shown)

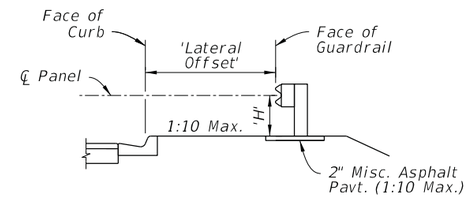

BEHIND CURB (Type F Curb Shown)

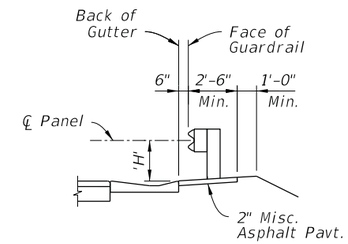

ADJACENT TO SHOULDER GUTTER

GUARDRAIL SECTIONS - TYPICAL

GUARDRAIL SECTIONS - CURB & GUTTER

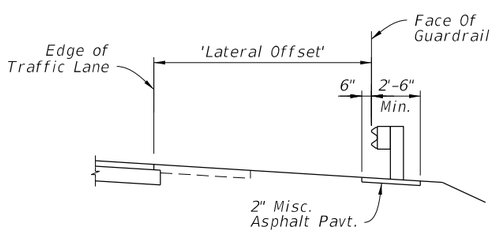

UNPAVED OR PARTIALLY PAVED SHOULDER

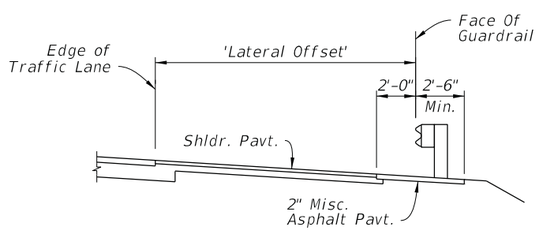

FULLY PAVED SHOULDER

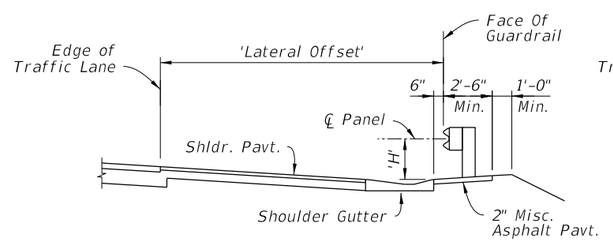

SHOULDER GUTTER

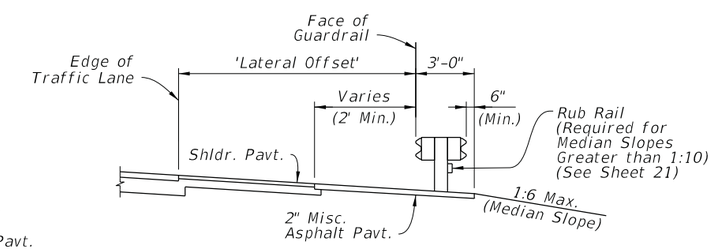

DOUBLE FACED GUARDRAIL (Shown In Median)

GUARDRAIL SECTIONS - SHOULDERS

GUARDRAIL HEIGHT SUMMARY TABLE:			
Type:	Min. Depth 'D':	Mounting Height 'H':	Post Length 'L':
W-Beam (Single and Double Faced)	3'-10"	2'-1"	6'-6"
Thrie-Beam (Single and Double Faced)	3'-10"	1'-9"	6'-6"
Timber Deep Post	4'-10"	See Above	7'-6"
Steel Deep Post	6'-4"	See Above	9'-0"

NOTES:

1. GUARDRAIL SECTIONS: Construct Sections as indicated in the plans. The details shown herein depict W-Beam Guardrail, but are applicable to the other defined Guardrail Types placed at the corresponding height, 'H'. Use components per Sheets 4 & 5. Steel and timber post types are interchangeable unless otherwise defined. The 1:10 Max. cross slope shown is the maximum slope permitted for proper guardrail function, but project-specific cross slope requirements are governed by additional design criteria, per the plans.

2. TYPICAL GRADING & PAVEMENT PLACEMENT DETAIL: Construct features as depicted except where superceded by specific Guardrail Sections or the plans. Place the Slope Break a Minimum of 2' behind the post. For Deep Posts, the slope break may be placed at the ℄ Post with the 2" Miscellaneous Asphalt Pavement omitted.

3. SLOPE BREAK CONDITION: Install Deep Posts only where called for in the plans. Deep Posts are only permitted where post spacing is 6'-3" or less.

4. LATERAL OFFSETS: The Lateral Offsets shown are governed by the station and offset call outs for Face of Guardrail, as shown in the plans.

5. ADJACENT TO CURB: Place the Face of Guardrail consistently offset either flush with the Face of Curb or 5" behind the Face of Curb, as indicated by the plans station and offset callout. For offset changes, transition the Face of Guardrail as shown in the plans.

GUARDRAIL SECTIONS

10/6/2022 2:17:13 PM

LAST REVISION	REVISION	DESCRIPTION:				INDEX	SHEET
11/01/19			FDOT	FY 2023-24 STANDARD PLANS	GUARDRAIL	536-001	6 of 24

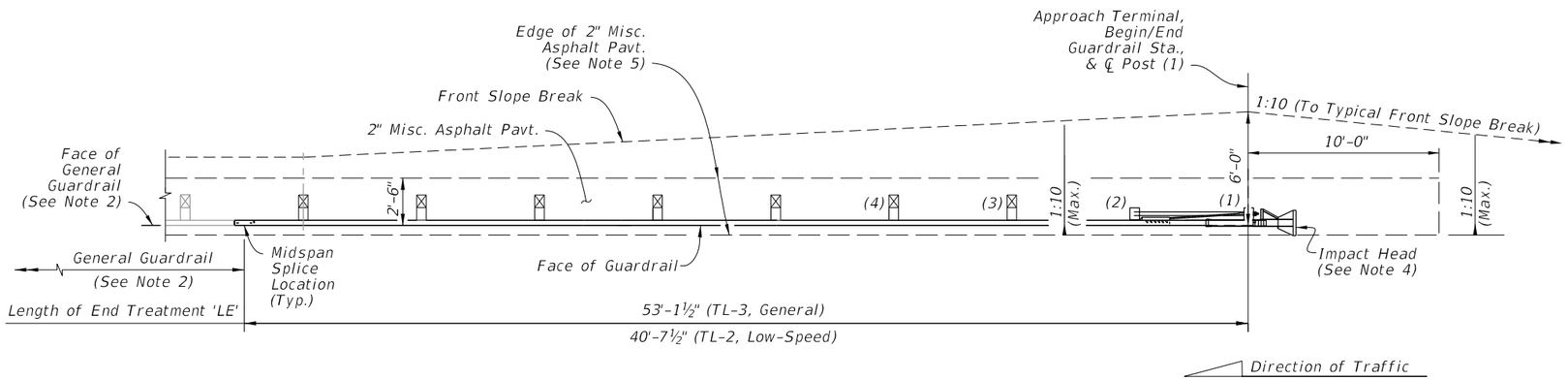

APPROACH TERMINAL ASSEMBLY
'PARALLEL' TYPE - PLAN VIEW

NOTES:

1. INSTALLATION: Locate Approach Terminals where called for in the plans, with the Post (1) ℄ placed at the Begin/End Guardrail Station indicated in the plans.

   The Plan Views shown herein are schematic only, showing basic geometry for Approach Terminals listed on the APL. The predefined Length of End Treatment, 'LE', includes the proprietary portion of various Approach Terminals and provides for more consistent planning of assembly installations across the differing Approach Terminal types. Forward-anchoring style Approach Terminals may vary from the planned lengths shown by up to 3'-0".

   Construct Approach Terminals as shown in the APL and in accordance with the manufacturer's unique drawing details, procedures, and specifications.

   Install posts in accordance with the manufacturer's drawings. The Special Posts on Sheet 23, including Special Steel Posts, Encased Posts, and Frangible Leave-Outs, are not permitted within the Approach Terminal segment unless otherwise called for in the plans.

   Align panel lap splices in accordance with the manufacturer's drawings, regardless of the direction of traffic.

   Install adjacent grading, gutters, and/or curbing as shown herein.

2. GENERAL GUARDRAIL: General Guardrail typically includes Panels and Post Spacing as shown on Sheet 2, including parallel and tapered segments.

   Approach Transitions, Low-Speed Guardrail, or Reduced Post Spacing Guardrail segments may be substituted for the General Guardrail shown herein if indicated in the plans.

3. APPROACH TERMINAL TEST LEVEL: Install either a Test Level 3 (TL-3) or Test Level 2 (TL-2) Approach Terminal as specified in the plans. TL-3 Approach Terminals may substitute for TL-2 Approach Terminals unless the substitution is specifically prohibited in the plans. TL-2 Approach Terminals may not substitute for TL-3 installations.

4. IMPACT HEAD END DELINEATOR: Apply Yellow Retroreflective Sheeting to the nose of the End Terminal in accordance with Specification 536.

5. 2" MISCELLANEOUS ASPHALT PAVEMENT: The Plan View depicts the Unpaved Shoulder condition. For Fully Paved Shoulder and Shoulder Gutter conditions, extend the 2" Misc. Asphalt Pavement as shown in the corresponding 'Section at Post (1)' details below.

   The 2" Misc. Asphalt Pavement shown upstream of Post (1) may be substituted with a different pavement type where called for in the Plans.

6. CLEAR AREA REQUIREMENT: Do not place any permanent aboveground installations within the areas shown with 1:10 maximum grading. For the finished condition, keep this area free of all aboveground obstructions, including dense vegetation and trees.

7. 'CURBED' AND 'DOUBLE FACED' GUARDRAIL SEGMENTS: See Sheet 8.

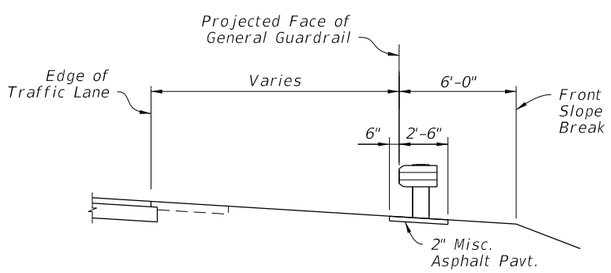

SECTION AT POST (1)
WITH UNPAVED SHOULDER

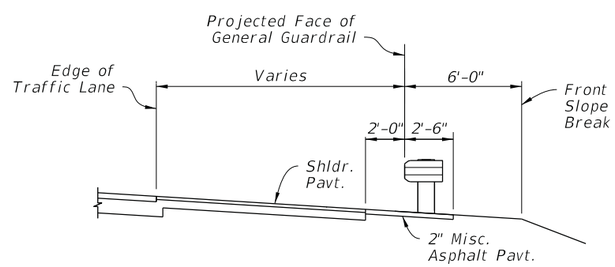

SECTION AT POST (1)
WITH FULLY PAVED SHOULDER

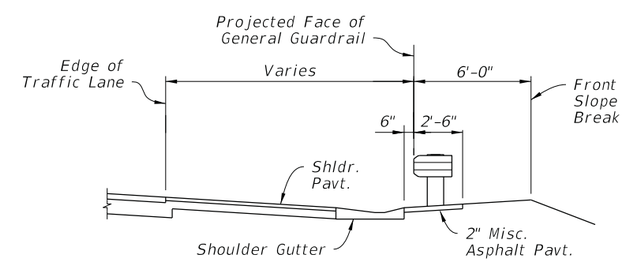

SECTION AT POST (1)
WITH SHOULDER GUTTER

END TREATMENT - APPROACH TERMINAL GEOMETRY - PARALLEL

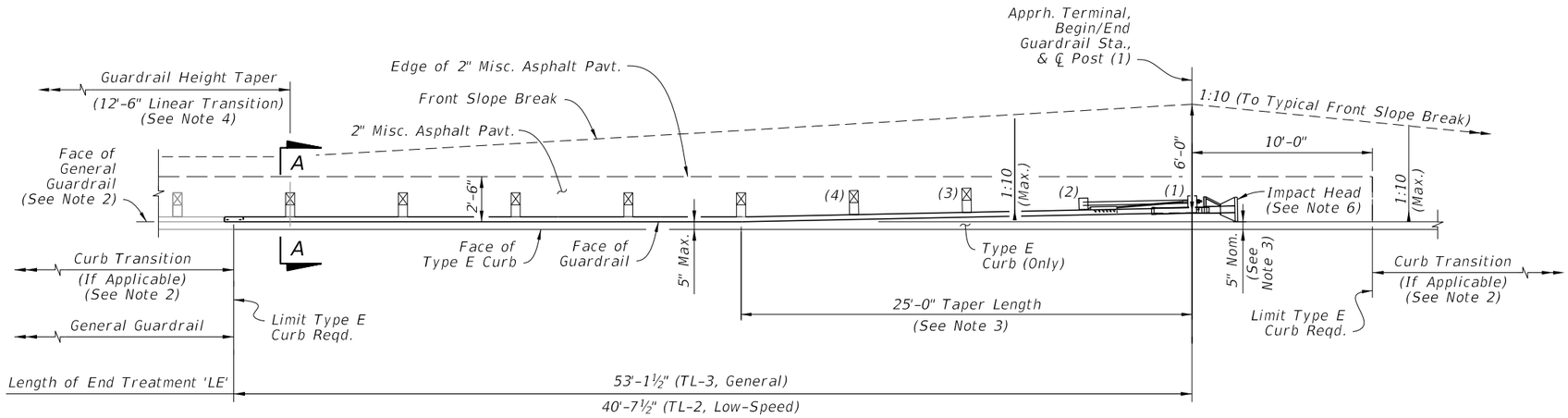

APPROACH TERMINAL ASSEMBLY
'CURBED' SEGMENT - PLAN VIEW

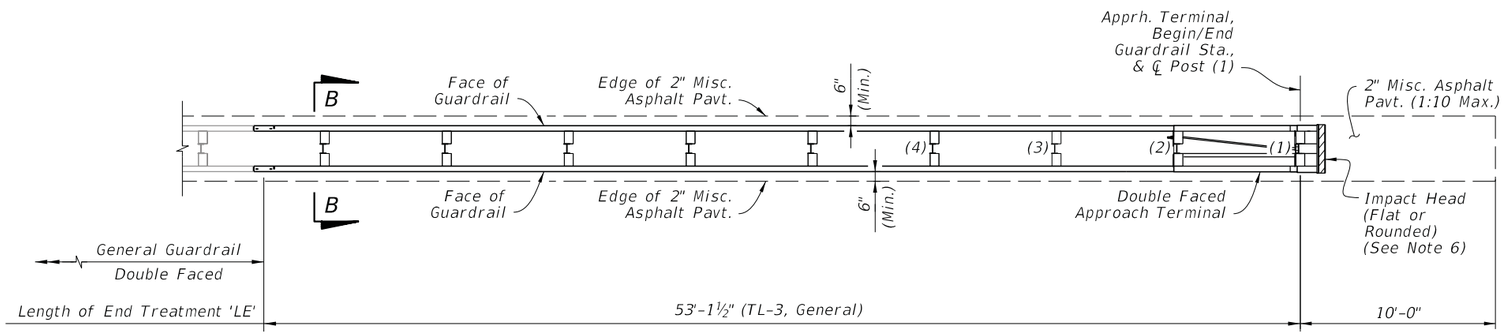

APPROACH TERMINAL ASSEMBLY
'DOUBLE FACED' SEGMENT - PLAN VIEW

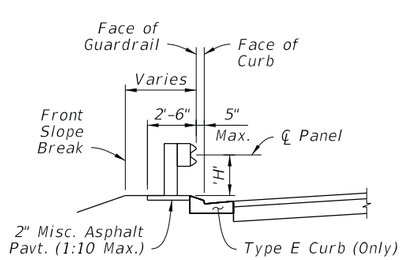

'CURBED' SECTION A-A
(Height, 'H', Measured from
Misc. Asphalt Pavt.)

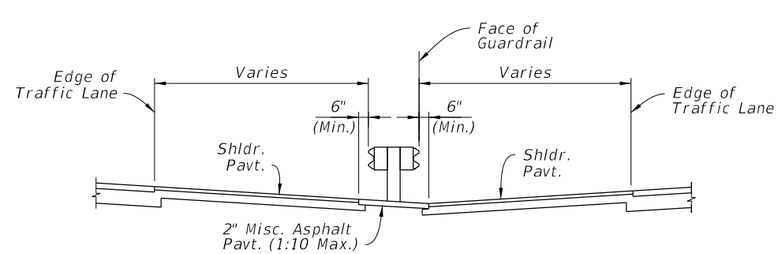

'DOUBLE FACED' SECTION B-B
(1:10 Slope or Flatter Reqd.)

NOTES:

1. GENERAL: See Notes 1 through 3 on Sheet 7.
2. CURBED SEGMENTS: Type E curb is required within the limits shown. When a different curb type is called for outside of the Type E curb limits, transition the curb shape linearly, over a nominal distance ranging 5'-0" to 10'-0"
3. TAPER LENGTH: For Curbed Segments, taper the guardrail away from the roadway where shown to place the inside edge of the Impact Head at 5" behind the face of the curb. Where additional lateral offset is required to fit the Approach Terminal Assembly hardware, such as a soil plate, place the Impact Head as close to the curb as the hardware allows, not to exceed 2'-0" from the face of curb.
4. GUARDRAIL HEIGHT TAPER: For Curbed Segments, the connecting General Guardrail Mounting Height, 'H', is typically measured from the Lip of Gutter (See Sheet 6 Guardrail Sections, 'Adjacent to Curb'), while the End Terminal Assembly 'H' is measured from the Misc. Asphalt Pavt. (See Section A-A). Linearly taper the difference in Mounting Height over a minimum length of 12'-6", starting where indicated herein.
5. DOUBLE FACED SEGMENT: Connect to Double Faced General Guardrail. Use consistent Posts and Offset Block types as specified in the APL drawings over the entire Length of End Treatment, 'LE'. Posts and Offset Blocks in the adjoining General Guardrail segment may be different from those inside of the 'LE'. A change in post type between timber and steel is permitted, immediately outside of the 'LE' segment.

   Maintain the 1:10 maximum grading as shown in Section B-B throughout segment 'LE'. Where required, transition to differing adjacent slopes linearly, over a minimum longitudinal length of 25'-0".
6. IMPACT HEAD END DELINEATOR: Apply Yellow Retroreflective Sheeting to the nose of the End Terminal in accordance with Specification 536.
7. CLEAR AREA REQUIREMENT: Do not place any permanent aboveground installations within the areas shown with 1:10 maximum grading. For the finished condition, keep this area free of all aboveground obstructions, including dense vegetation and trees.
8. 2" MISCELLANEOUS ASPHALT PAVEMENT: The 2" Misc. Asphalt Pavement shown upstream of Post (1) may be substituted with a different pavement type where called for in the Plans.
9. SINGLE FACED 'PARALLEL' SEGMENTS: See Sheet 7.

10/6/2022 2:17:14 PM

END TREATMENT - APPROACH TERMINAL GEOMETRY CURBED AND DOUBLE FACED

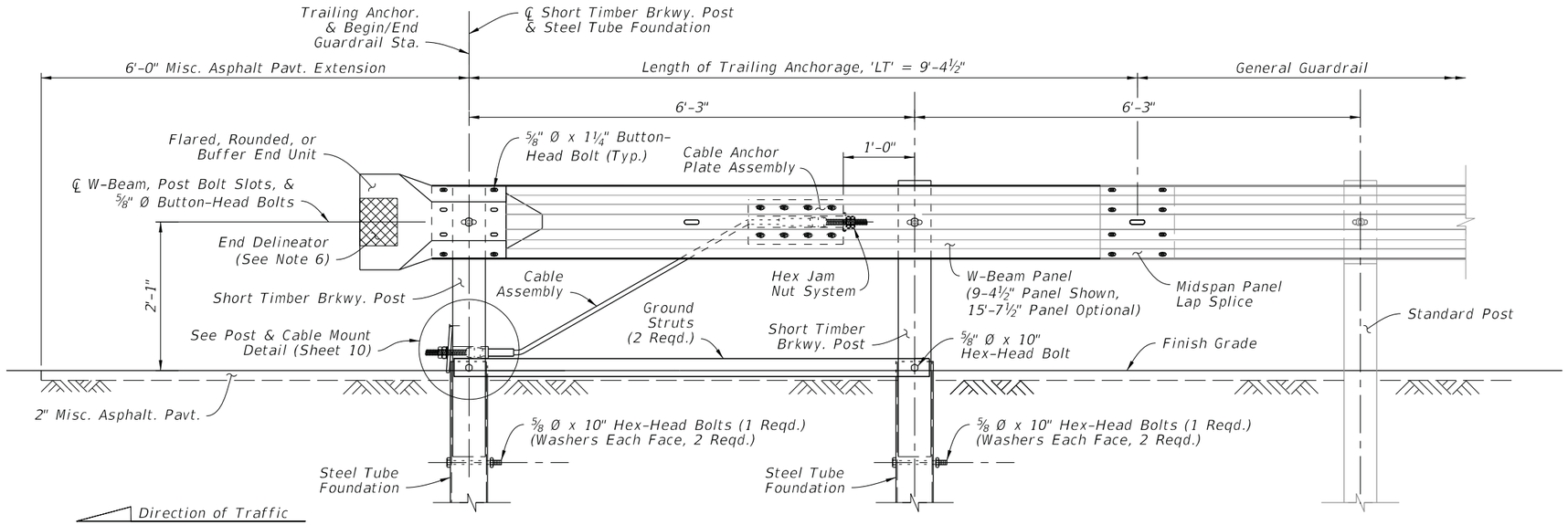

INSTALLED ELEVATION

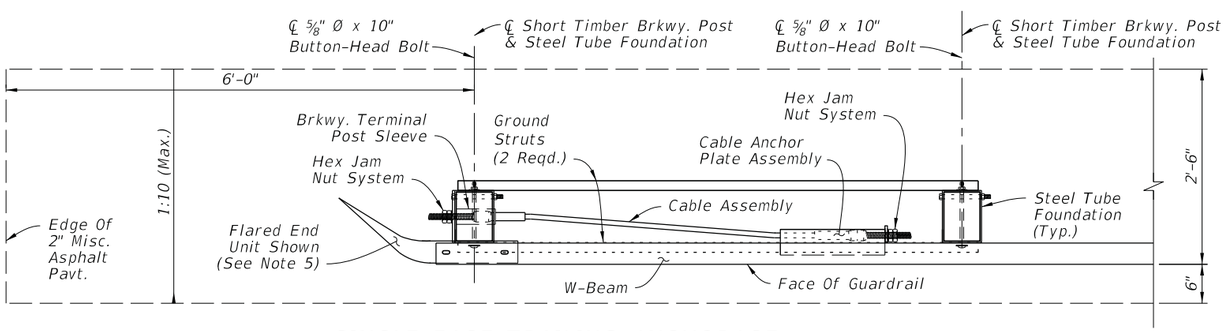

SINGLE FACE TRAILING ANCHORAGE
INSTALLED PLAN

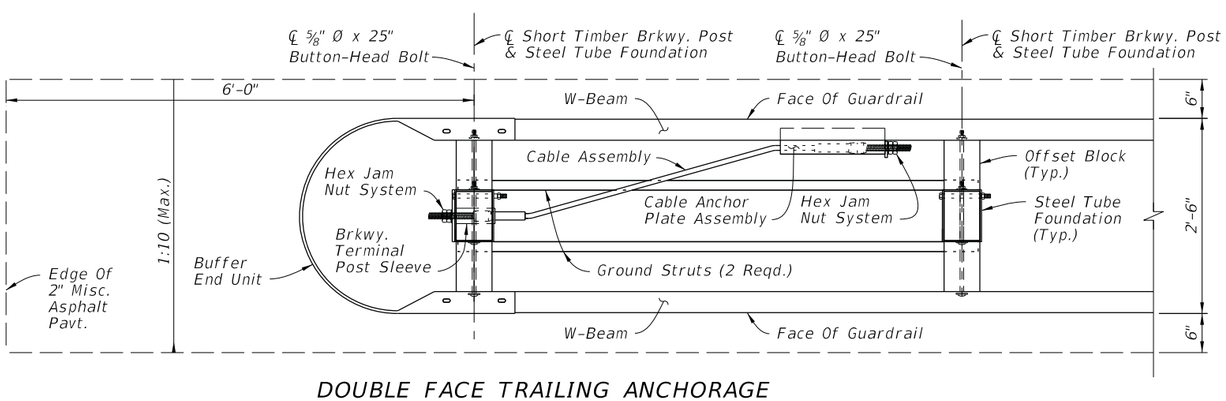

DOUBLE FACE TRAILING ANCHORAGE
INSTALLED PLAN

NOTES:

1. COMPONENT DETAILS: For additional component details, See Sheet 10.
2. END UNITS: Use materials for end units as defined in Specifications Section 967. End Units are referred to as "End or Buffer Sections" in AASHTO M180.

   Lap the Flared End Unit behind the W-Beam; lap the Rounded and Buffered End Units over the face of the W-Beam.
3. FOUNDATIONS: Install Steel Tubes by either of the following methods:

   a. Excavate, backfill, and compact material to provide full passive soil resistance to the surface of the Tube.

   b. Drive the Tube using a dummy timber post to prevent damage to the Breakaway Post.
4. GENERAL GUARDRAIL: General Guardrail typically includes Panels and Post Spacing as shown on Sheet 2, including parallel and tapered segments. Transitions, Low-Speed Guardrail, or Reduced Post Spacing Guardrail segments may be substituted for the General Guardrail shown herein if indicated in the plans.
5. SIDEWALK REQUIREMENTS: When sidewalks are located adjacent to the End Treatment, install a Rounded End Unit (Flared End Unit not permitted for this case).
6. END DELINEATOR: Mount retroreflective sheeting to the approach face of the End Unit in accordance with Specification Sections 536 and 967.

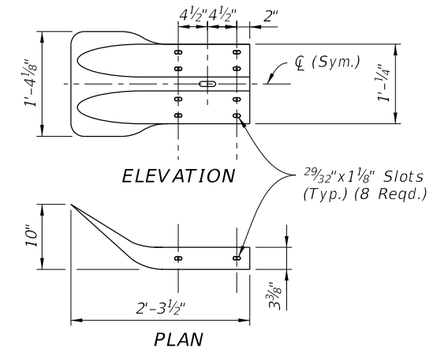

FLARED END UNIT

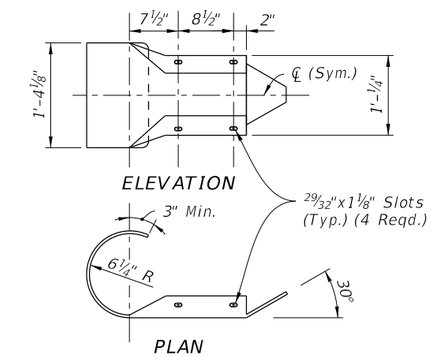

ROUNDED END UNIT

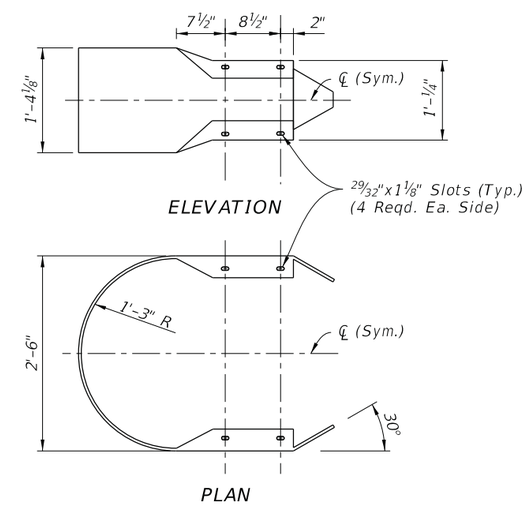

BUFFER END UNIT

END TREATMENT - TRAILING ANCHORAGE

10/6/2022 2:17:15 PM

LAST REVISION	REVISION	DESCRIPTION:			INDEX	SHEET
11/01/20			FY 2023-24 STANDARD PLANS	GUARDRAIL	536-001	9 of 24

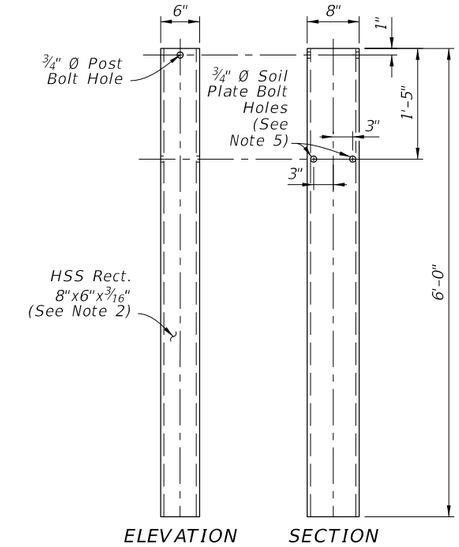

STEEL TUBE FOUNDATION

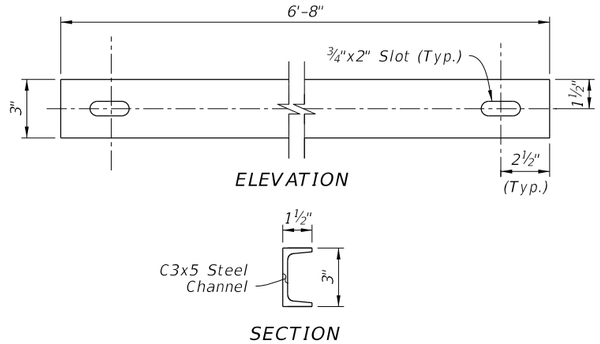

GROUND STRUT

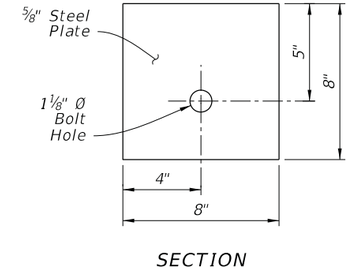

BEARING PLATE

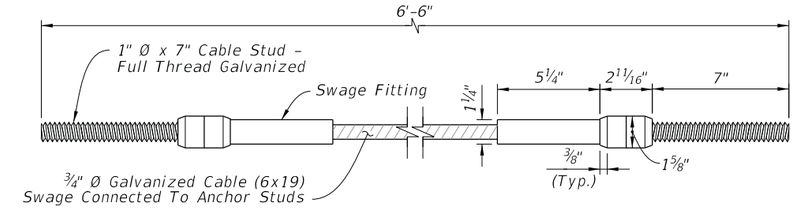

CABLE ASSEMBLY

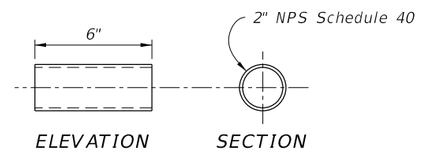

BREAKAWAY TERMINAL POST SLEEVE

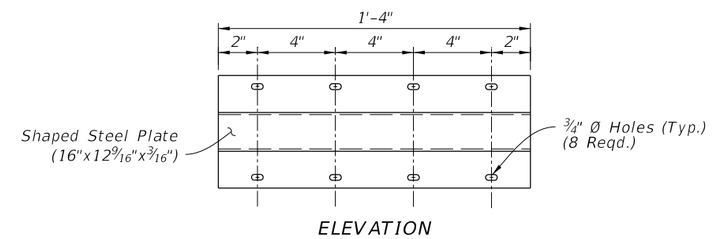

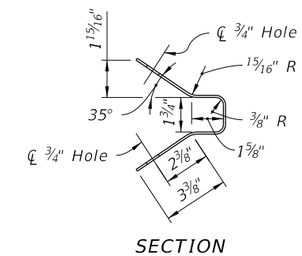

CABLE ANCHOR PLATE

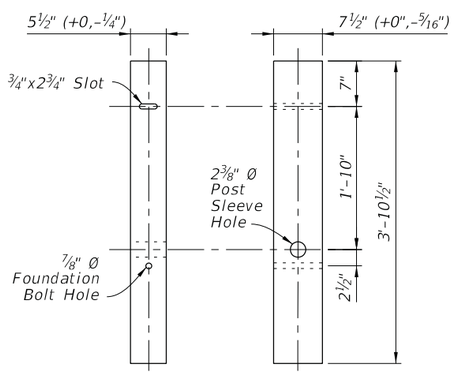

SHORT TIMBER BREAKAWAY POST (6"x8" Nom.)

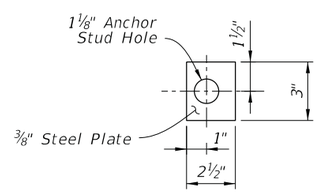

STEEL END PLATE

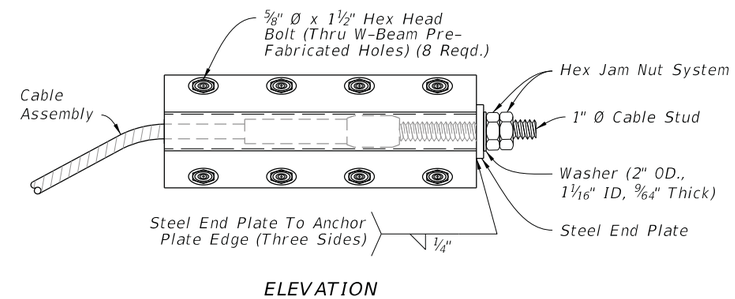

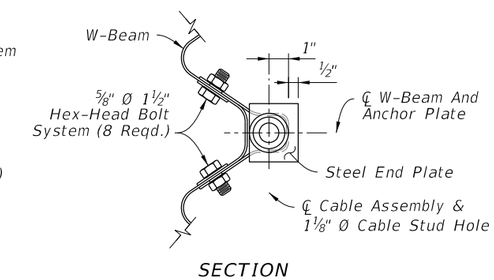

CABLE ANCHOR PLATE ASSEMBLY

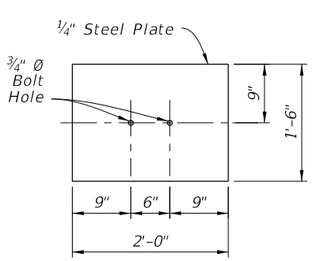

SOIL PLATE

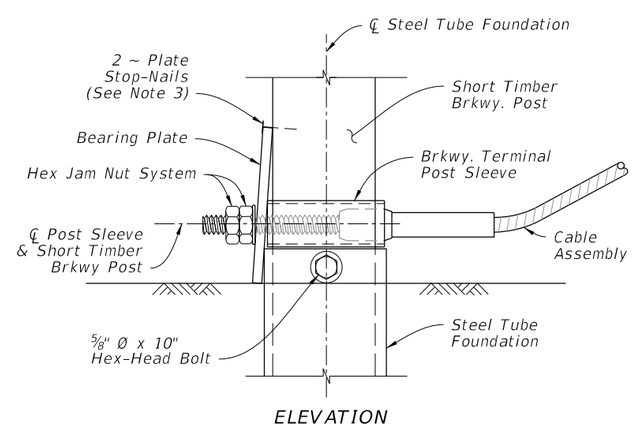

POST & CABLE MOUNT ASSEMBLY

NOTES:

1. INSTALLATION: Use components as shown on Sheets 9 & 11.
2. MATERIALS: Use steel plates, channels, and Cable Assemblies in accordance with Specification 967.

   Use Short Timber Breakaway Posts and Steel Tube Foundations in accordance with Specification 536.

   Use Hex Nuts, Hex Jam Nuts, and Washers in accordance with the AASHTO-AGC-ARTBA Guide to Standardized Barrier Hardware with English unit equivalents of components FNX24a and FWC24a, respectively. Two Hex Nuts may be used for the Hex Jam Nut System.
3. PLATE STOP-NAILS: To prevent rotation of the Bearing Plate, drive steel 2½" Type 8d nails with ASTM A153 hot-dip galvanization.
4. CABLE ANCHOR PLATE ASSEMBLY INSTALLATION: Mount to the pre-fabricated Cable Anchor Plate Bolt Holes in the W-Beam Panel, as shown on Sheet 4. These panel holes are only permitted for this Cable Anchor Plate Assembly application.
5. SOIL PLATE BOLT HOLE(S): For Trailing Anchorage installations as shown on Sheet 9, the two bolt holes shown may be substituted with a single bolt hole located at the tube centerline.

END TREATMENT - COMPONENT DETAILS

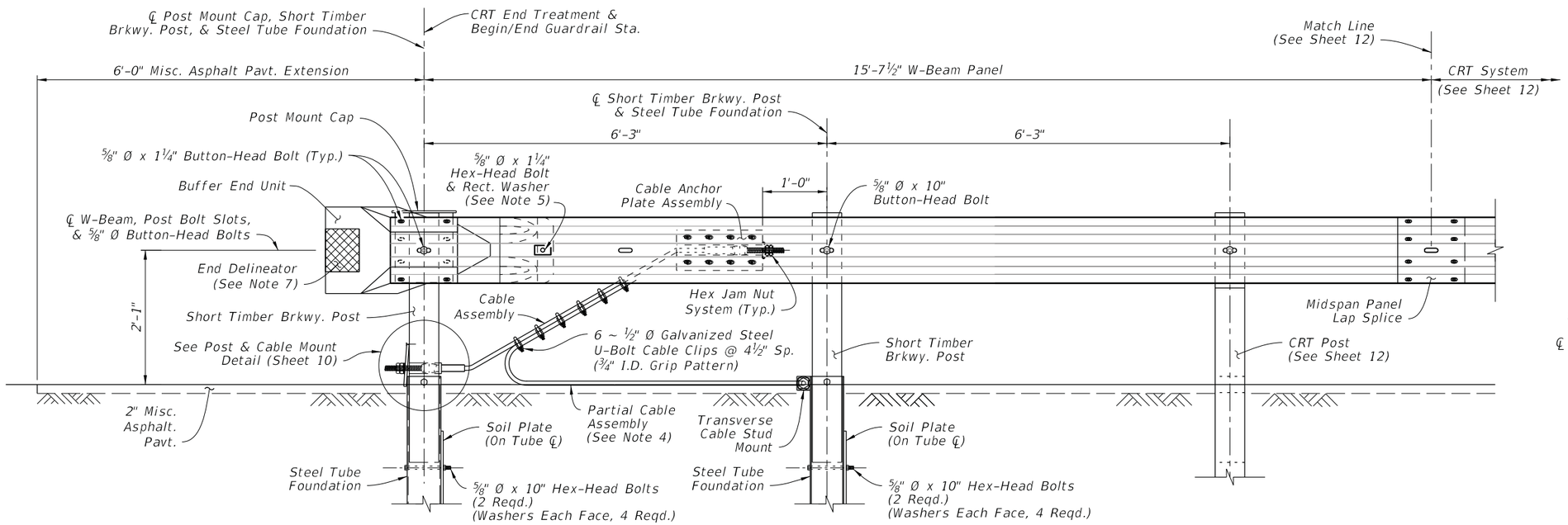

INSTALLED ELEVATION

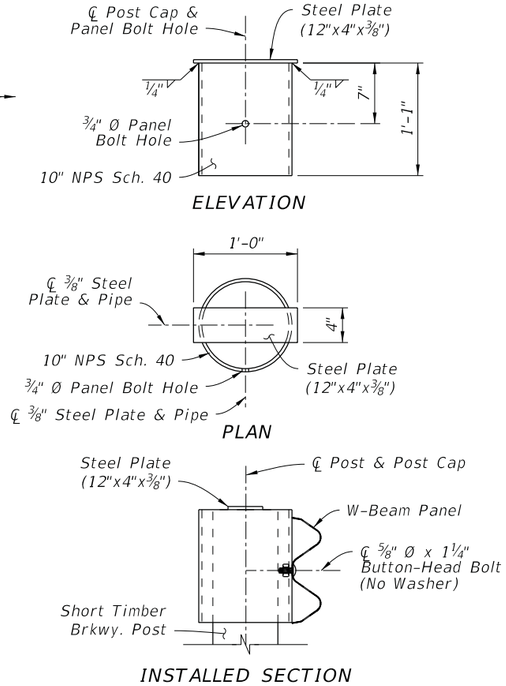

POST MOUNT CAP

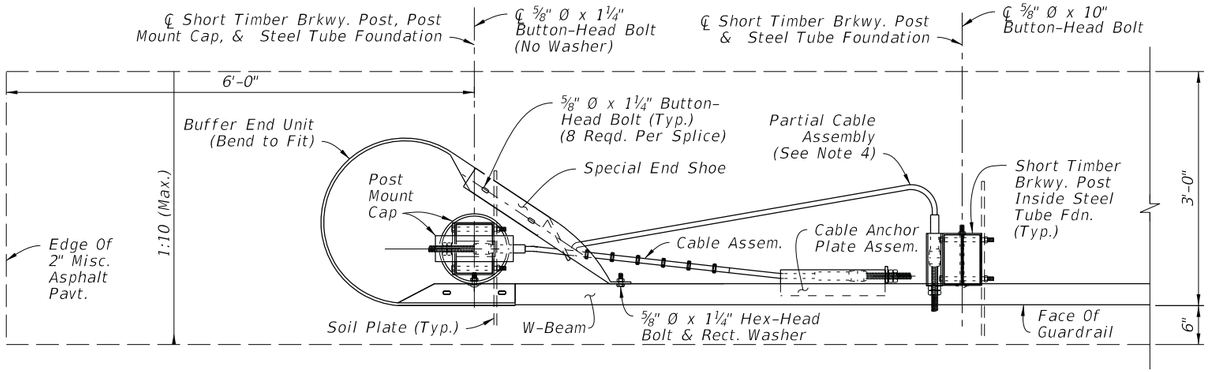

INSTALLED PLAN

CRT END TREATMENT ASSEMBLY

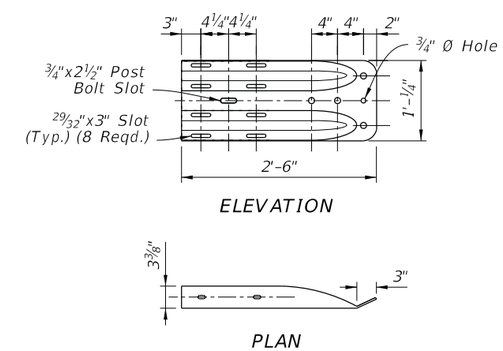

SPECIAL END SHOE

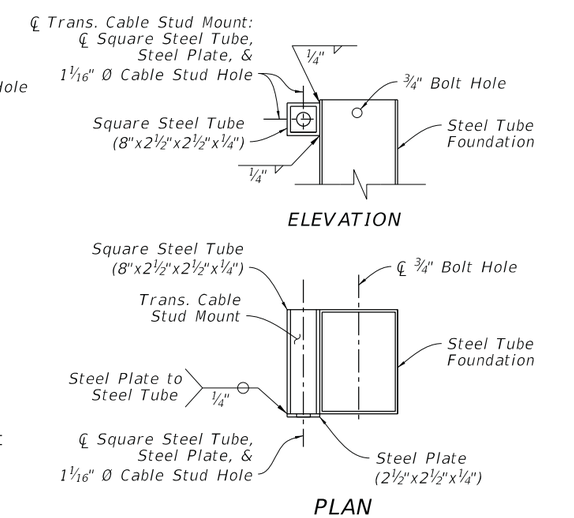

TRANSVERSE CABLE STUD MOUNT

NOTES:

1. INSTALLATION: Use with CRT Systems as required on Sheet 12.
2. COMPONENT DETAILS: For additional component details, See Sheet 10 & 12. For the Rectangular Washer detail, see Sheet 24.
3. MATERIALS: Use steel End Shoes, Plates, Tubes, and pipes in accordance with Specification 967.
4. PARTIAL CABLE ASSEMBLY: The Partial Cable Assembly is similar to the Cable Assembly defined on Sheet 10, except with a 9'-0" total length and the Swage Fitting and Cable Stud omitted from one end.

   Feed the Cable Stud through the Cable Stud Hole of the Transverse Cable Stud Mount as shown, and secure it with the Hex Jam Nut System as defined on Sheet 10.
5. SPECIAL END SHOE MOUNT: Punch a ¾" Ø hole in the W-Beam Panel as needed to secure the Special End Shoe with the ⅝" Ø Hex-Head Bolt. Galvanize hole per Specification 562.
6. FOUNDATIONS: Install Steel Tubes with attached Soil Plates by either of the following methods:

   a. Excavate, backfill, and compact material to provide full passive soil resistance to all surfaces of the tube and soil plate.

   b. Drive the steel tube and soil plate as a single unit using a dummy timber post to prevent damage to the breakaway post.
7. END DELINEATOR: Mount retroreflective sheeting to the approach face of the Buffer End Unit in accordance with Specifications 536 and 967.

10/6/2022 2:17:17 PM

END TREATMENT - CONTROLLED RELEASE TERMINAL (CRT) SYSTEM

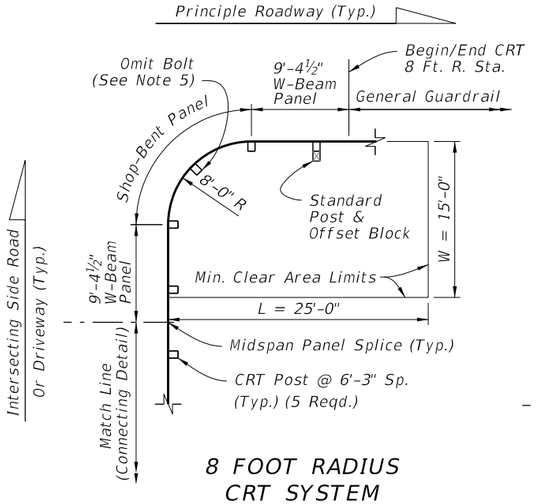

8 FOOT RADIUS CRT SYSTEM PLAN VIEW

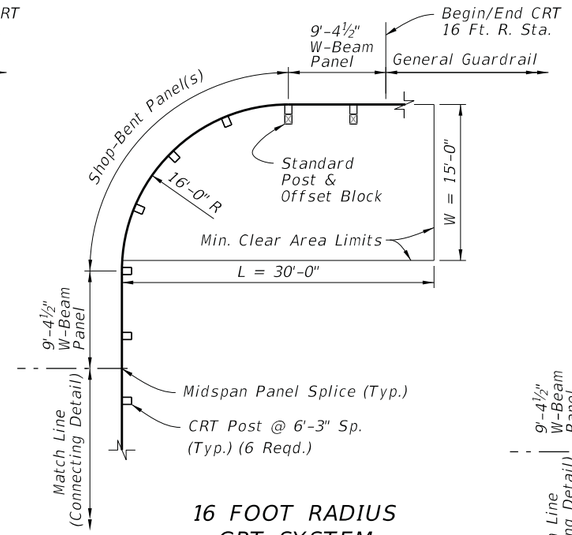

16 FOOT RADIUS CRT SYSTEM PLAN VIEW

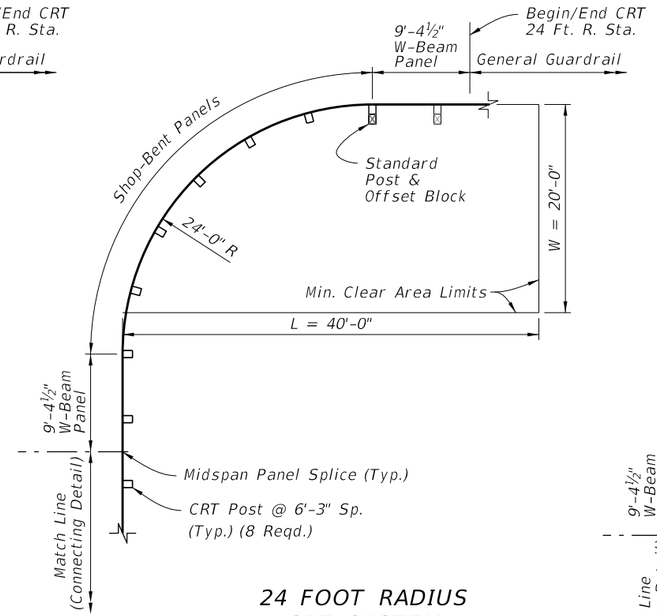

24 FOOT RADIUS CRT SYSTEM PLAN VIEW

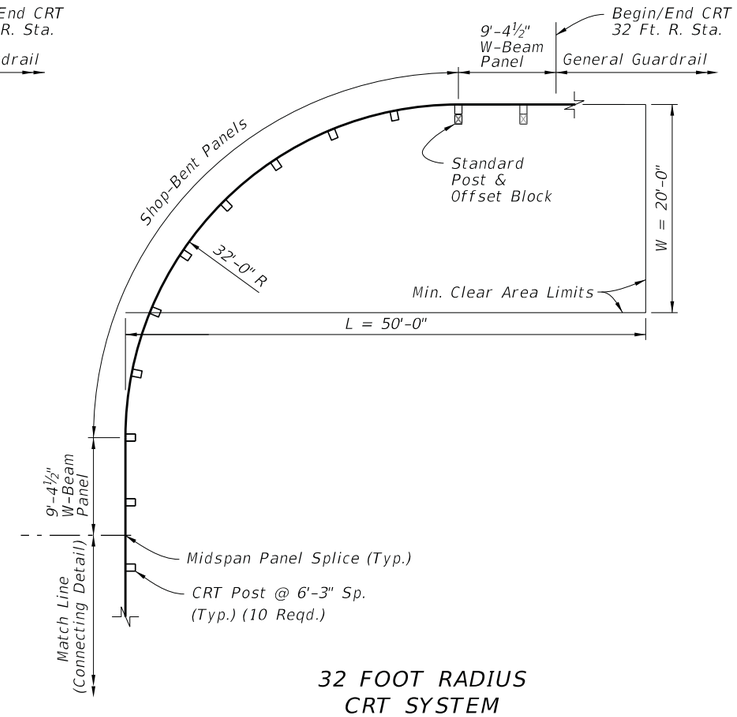

32 FOOT RADIUS CRT SYSTEM PLAN VIEW

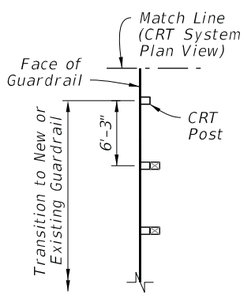

CONTINUING OPTION

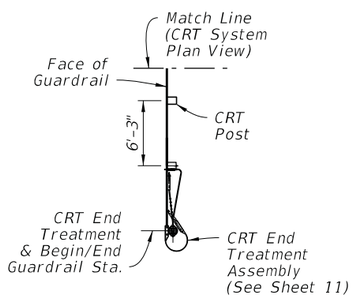

END TREATMENT OPTION

CONNECTING DETAIL

CRT SYSTEM SUMMARY TABLE:

RETURN RADIUS (FT.)	LENGTH OF SHOP-BENT PANEL(S) (FT.)	QUANTITY OF CRT POSTS	AREA CLEAR OF HAZARDS 'L' x 'W' (FT.)
8	12.5	5	25 x 15
16	25.0	6	30 x 15
24	37.5	8	40 x 20
32	50.0	10	50 x 20

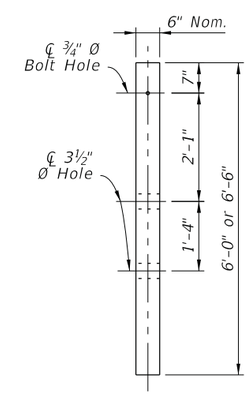

CRT POST ELEVATION (6"x8" Nom. Timber)

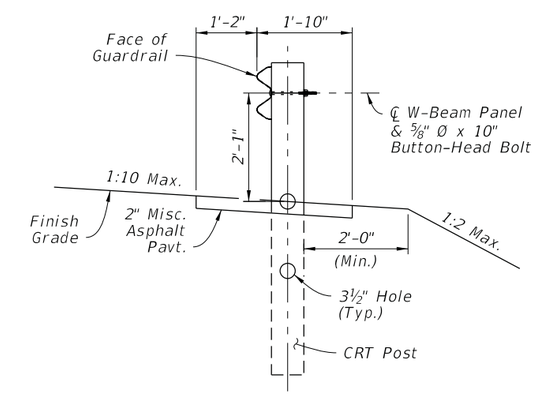

CRT INSTALLED SECTION

NOTES:

1. INSTALLATION: Construct the specified radius layout and Connecting Detail option as shown in the plans.
2. MIN. CLEAR AREA: Keep the area behind the CRT free of fixed objects and aboveground hazards within the Min. Clear Area limits shown. Maintain a slope not steeper than 1:10 for a minimum 2' behind the posts, and maintain a slope not steeper than 1:2 beyond 2' from the posts.
3. APPROACH GRADING: Maintain grading on the roadway side of the guardrail face at a maximum slope of 1:10.
4. MATERIALS: For CRT Posts, use Timber Post material in accordance with Specification 967. Use steel panels and hardware in accordance with Specification 967.
5. BOLT OMISSION: For the 8 Foot Radius CRT System only, do not place a panel-to-post mount bolt at the center CRT Post (omit the ⅝" Button-Head Bolt only at the location shown).
6. SHOP-BENT PANELS: Install Shop-Bent panel(s) where indicated using 12'-0" or 25'-0" W-Beam Panels. Splice at post locations within the CRT radius using the General configuration of ⅝" Ø Button-Head Bolts (8 reqd. per splice).
7. GENERAL GUARDRAIL: General Guardrail typically includes Panels and Post Spacing as shown on Sheet 2, including parallel and tapered segments. Approach Transitions, Low-Speed Guardrail, or Reduced Post Spacing Guardrail segments may be substituted for the General Guardrail shown herein if indicated in the plans.

10/6/2022 2:17:18 PM

LAYOUT FOR CONTROLLED RELEASE TERMINAL (CRT) SYSTEMS - SIDE ROADS AND DRIVEWAYS

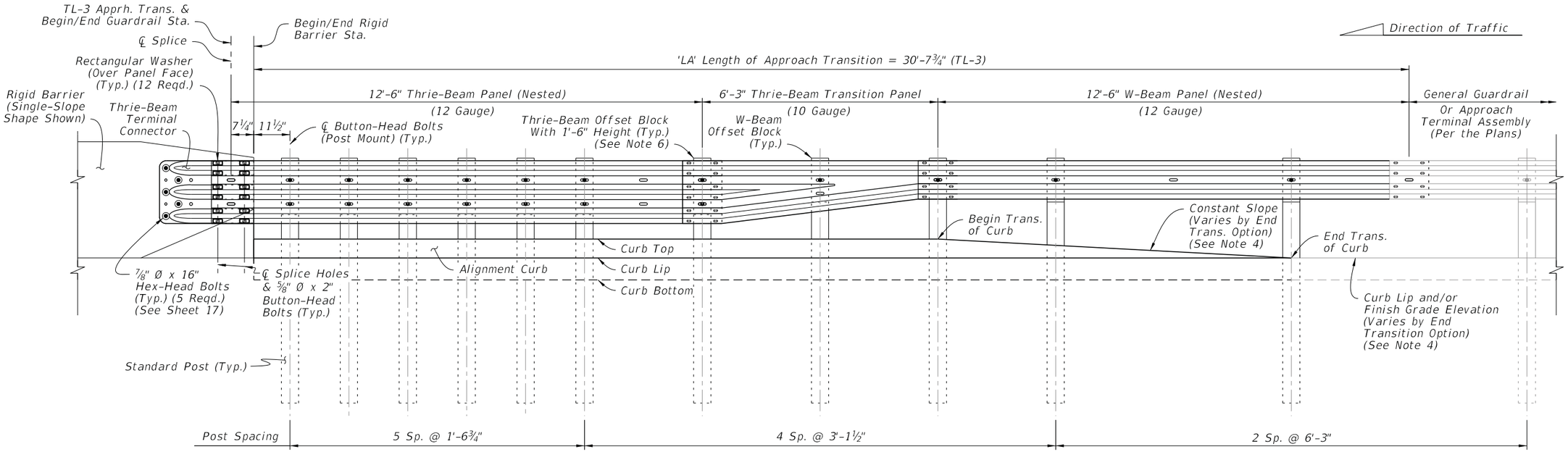

TL-3 APPROACH TRANSITION INSTALLED ELEVATION

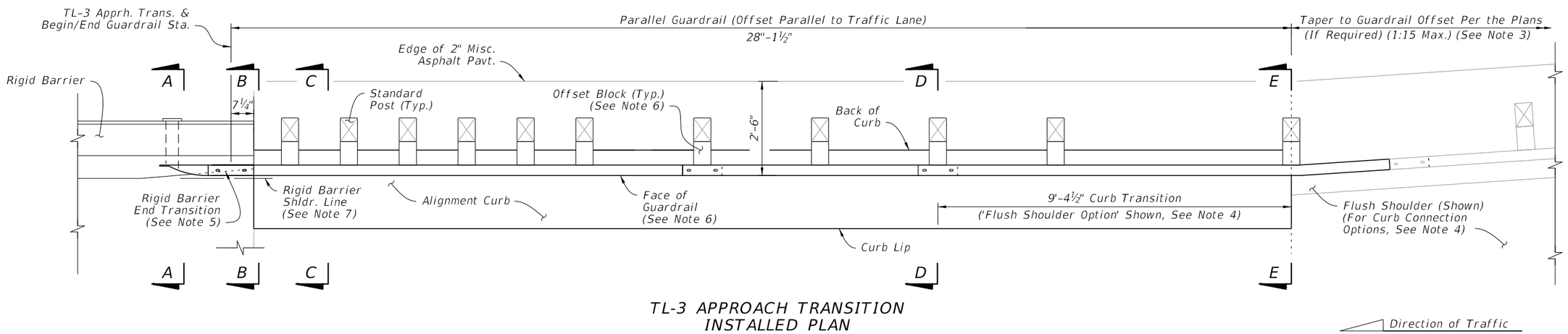

TL-3 APPROACH TRANSITION INSTALLED PLAN

NOTES:

1. INSTALLATION: Construct the Approach Transition segment where indicated in the plans. For example Layouts showing the Approach Transition's fit among other guardrail segments, see Sheet 19.

   For existing bridge connection options, see Indexes 536-002, 521-404, and 521-405.

2. SECTION VIEWS & DETAILS: For cross sections and details, including the barrier mounting hardware, curb transition, adjacent grading, and installation dimensions, see Sheet 17.

3. GUARDRAIL TAPER: The connecting guardrail may require a different lateral offset if shown in the plans. At the location shown herein, taper the guardrail to the connecting guardrail offset. If the adjacent guardrail segment has the same offset as the Approach Transition segment, then no taper is required.

4. END TRANSITION OF CURB OPTIONS: The Plan and Elevation views depict an example Curb Transition to Flush Shoulder from Section D-D to E-E, but this transition may require a different shape depending on the End Transition option shown in the plans (Either a 'Shoulder Gutter Option', 'Raised Curb Option', or 'Flush Shoulder Option'). See Sheet 14 for additional curb options and Sheet 17 for curb shape details.

5. RIGID BARRIER END TRANSITION: Taper the Rigid Barrier toe as shown. See Concrete Barrier, Index 521-001, and Traffic Railing, Indexes 521-422 and 521-428, for details.

6. OFFSET BLOCKS: For Thrie-Beam post locations within the Length of Approach Transition segment, use the Timber Offset Blocks with 1'-6" height shown on Sheet 5.

   For the midspan of the Thrie-Beam Transition Panel and for all other W-Beam locations shown herein, use the W-Beam Offset Blocks with 1'-2" height.

7. OFFSET: The required offset difference between the Face of Guardrail and Rigid Barrier Shoulder Line is considered negligible and may not be shown in the guardrail offset callouts in the plans. A consistent guardrail offset deviation of up to 4 inches outside of the Rigid Barrier Shoulder Line is permitted over the length 'LA'.

8. GENERAL GUARDRAIL: General Guardrail typically includes Panels and Post Spacing as shown on Sheet 2, including parallel and tapered segments. Approach Terminals, Low-Speed Guardrail, or Reduced Post Spacing Guardrail segments may be substituted for the General Guardrail shown herein if indicated in the plans.

10/6/2022 2:17:19 PM

APPROACH TRANSITION CONNECTION TO RIGID BARRIER - GENERAL, TL-3

LAST REVISION	REVISION	DESCRIPTION:	FY 2023-24 STANDARD PLANS	GUARDRAIL	INDEX	SHEET
11/01/19					536-001	13 of 24

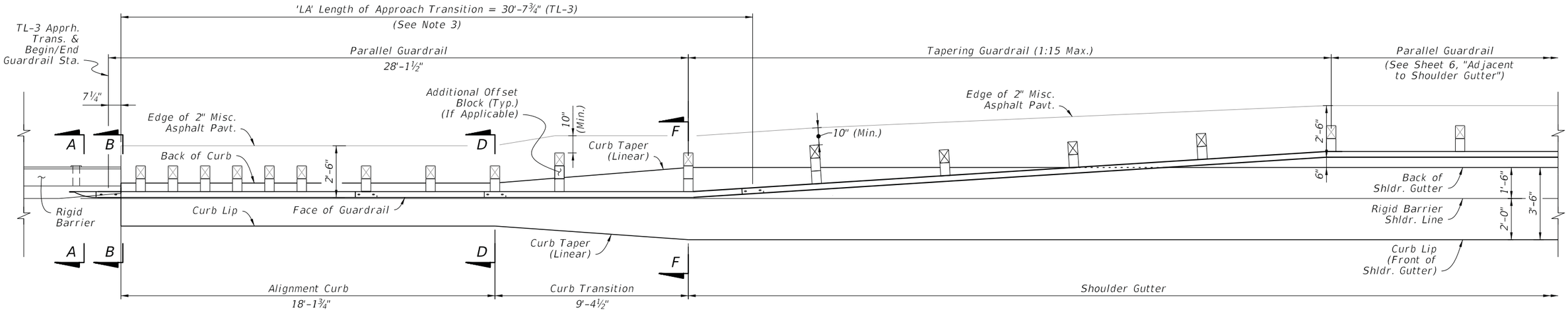

TL-3 APPROACH TRANSITION WITH 'SHOULDER GUTTER' CONNECTION - PLAN VIEW

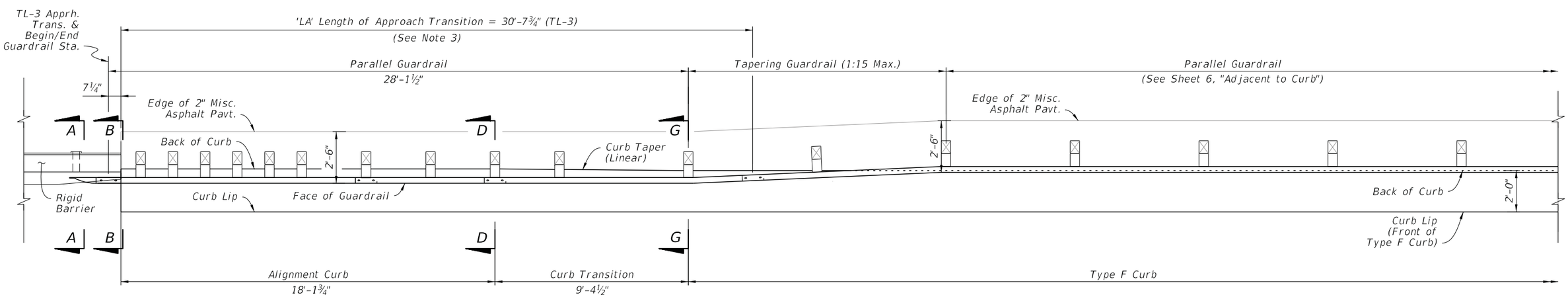

TL-3 APPROACH TRANSITION WITH 'TYPE F CURB' CONNECTION - PLAN VIEW

NOTES:

1. GENERAL: See the applicable notes and details on Sheet 13.
2. SECTION VIEWS & DETAILS: For cross sections and details, including the barrier mounting hardware, curb transition, adjacent grading, and installation dimensions, see Sheet 17.
3. ELEVATION VIEW: For post and panel installation details within 'LA', see the elevation view on Sheet 13. The curb details will differ depending on curb option required.

10/6/2022 2:17:19 PM

APPROACH TRANSITION CONNECTION TO RIGID BARRIER - GENERAL, TL-3 CURB CONNECTIONS

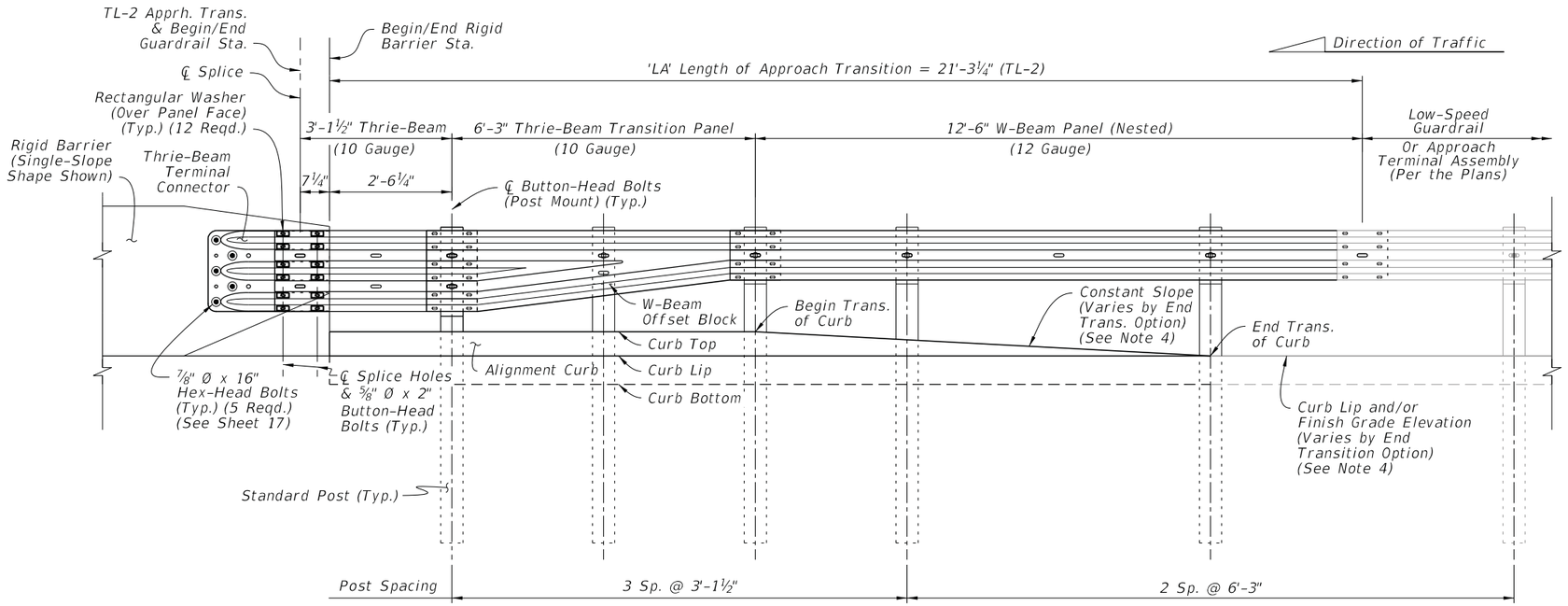

TL-2 APPROACH TRANSITION
INSTALLED ELEVATION

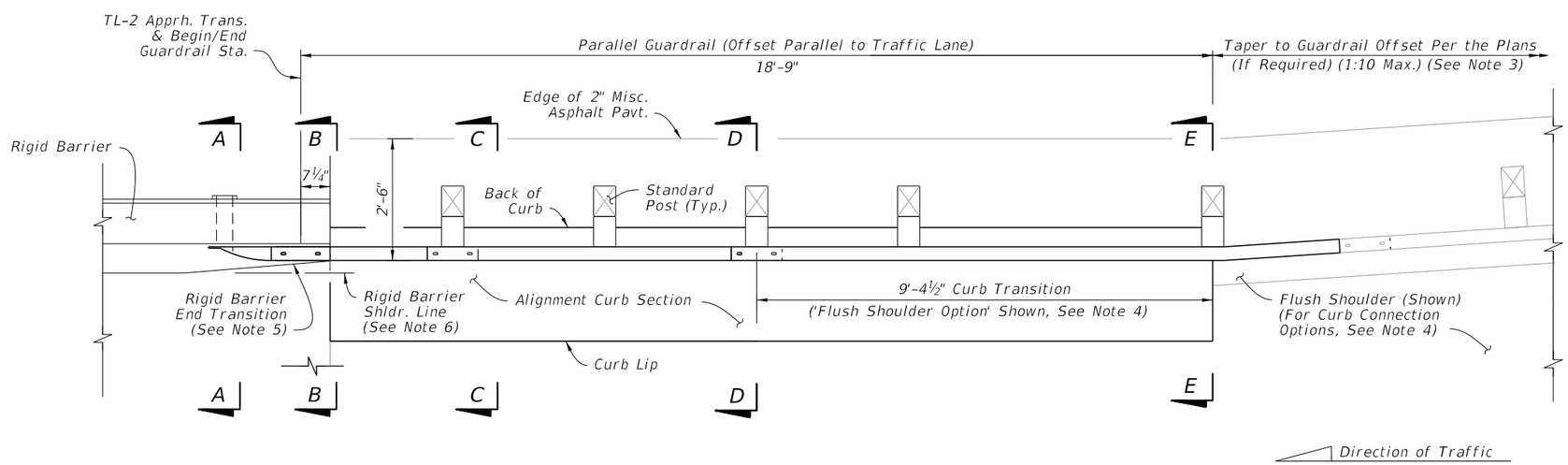

TL-2 APPROACH TRANSITION
INSTALLED PLAN

NOTES:

1. INSTALLATION: Construct the Approach Transition segment where indicated in the plans. For example Layouts showing the Approach Transition's fit among other guardrail segments, see Sheet 19.

   For existing bridge connection options, see Indexes 536-002, 521-404, and 521-405.

2. SECTION VIEWS & DETAILS: For cross sections and details, including the barrier mounting hardware, curb transition, adjacent grading, and installation dimensions, see Sheet 17.

3. GUARDRAIL TAPER: The connecting guardrail may require a different lateral offset if shown in the plans. At the location indicated herein, taper the guardrail to the connecting guardrail offset. If the adjacent guardrail segment has the same offset as the Approach Transition segment, then no taper is required.

4. END TRANSITION OF CURB OPTIONS: The Plan and Elevation views depict an example Curb Transition to Flush Shoulder from Section D-D to E-E, but this transition may require a different shape depending on the End Transition option shown in the plans (Either a 'Shoulder Gutter Option', 'Raised Curb Option', or 'Flush Shoulder Option'). See Sheet 16 for additional curb options and Sheet 17 for curb shape details.

5. RIGID BARRIER END TRANSITION: Taper the Rigid Barrier toe as shown. See Concrete Barrier, Index 521-001, and Traffic Railing, Indexes 521-422 and 521-428, for details.

6. OFFSET: The required offset difference between the Face of Guardrail and Rigid Barrier Shoulder Line is considered negligible and may not be shown in the guardrail offset callouts in the plans. A consistent guardrail offset deviation of up to 4 inches outside of the Rigid Barrier Shoulder Line is permitted over the length 'LA'.

7. GENERAL GUARDRAIL: General Guardrail typically includes Panels and Post Spacing as shown on Sheet 2, including parallel and tapered segments. Approach Terminals, Low-Speed Guardrail, or Reduced Post Spacing Guardrail segments may be substituted for the General Guardrail shown herein if indicated in the plans.

10/6/2022 2:17:20 PM

APPROACH TRANSITION CONNECTION TO RIGID BARRIER - LOW-SPEED, TL-2

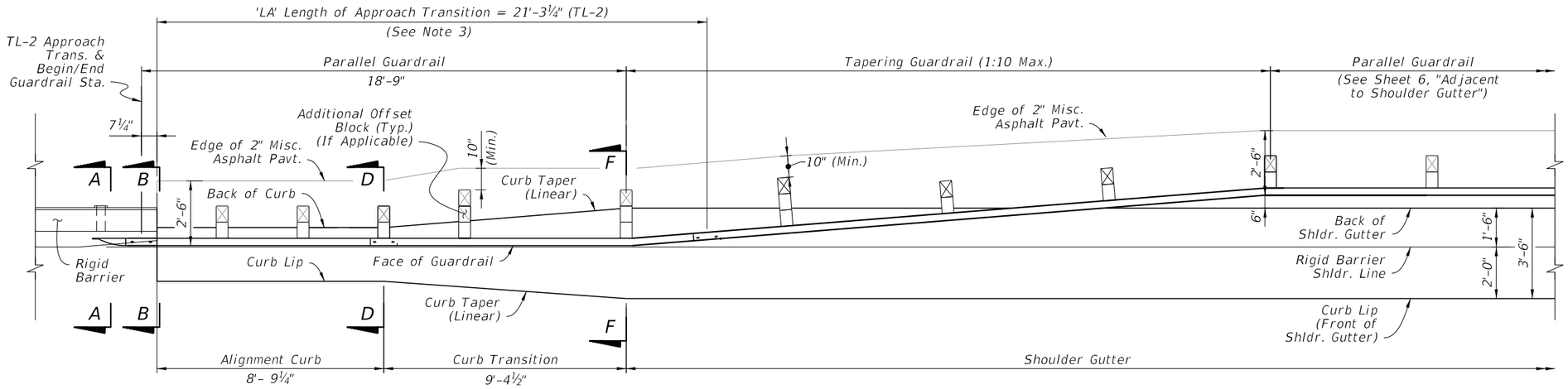

TL-2 APPROACH TRANSITION
WITH 'SHOULDER GUTTER'
CONNECTION - PLAN VIEW

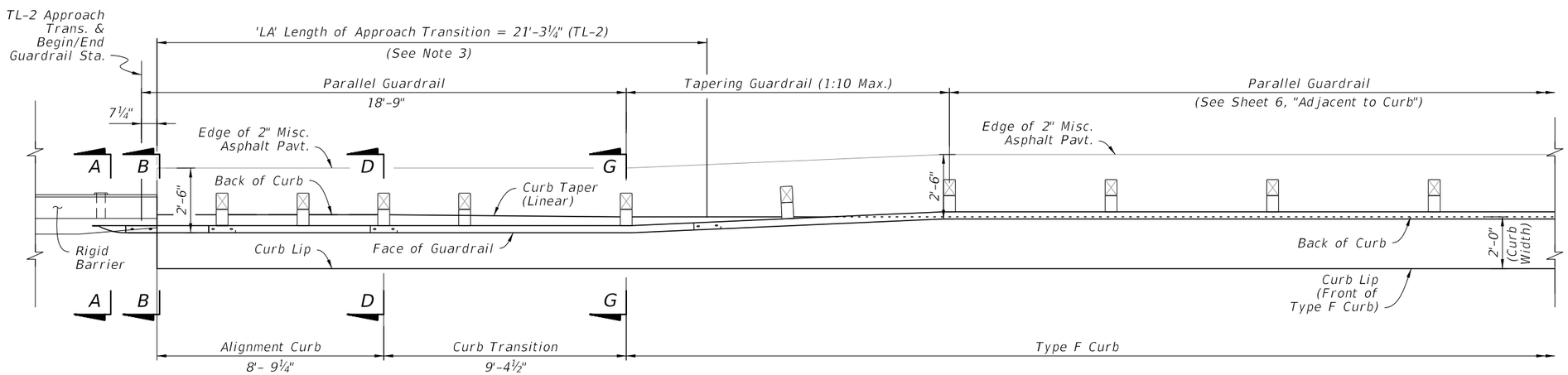

TL-2 APPROACH TRANSITION
WITH 'TYPE F CURB'
CONNECTION - PLAN VIEW

NOTES:

1. GENERAL: See the applicable notes and details on Sheet 15.
2. SECTION VIEWS & DETAILS: For cross sections and details, including the barrier mounting hardware, curb transition, adjacent grading, and installation dimensions, see Sheet 17.
3. ELEVATION VIEW: For post and panel installation details within 'LA', see the elevation view on Sheet 15. The curb details will differ depending on curb option required.

10/6/2022 2:17:21 PM

APPROACH TRANSITION CONNECTION TO RIGID BARRIER - LOW-SPEED, TL-2 CURB CONNECTIONS

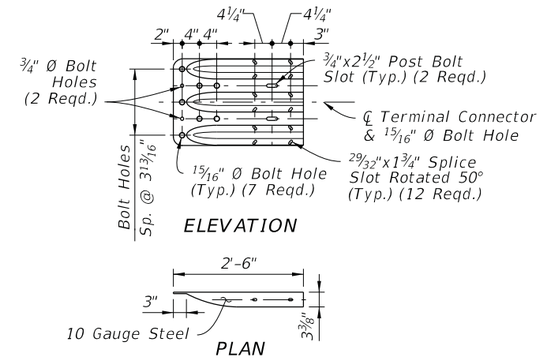

THRIE-BEAM TERMINAL CONNECTOR DETAIL

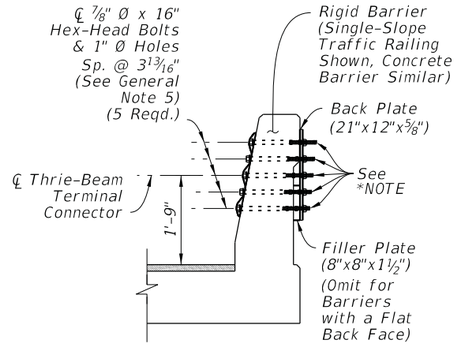

SECTION A-A
RIGID BARRIER TERMINAL CONNECTOR MOUNT

*NOTE: For locations within 4'-0" of a sidewalk or shared use path, trim bolts down to within ¼" of tightend nut. Deform exposed threads. File down sharp edges and burrs.

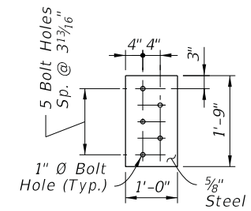

BACK PLATE

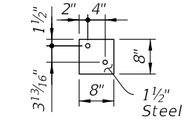

FILLER PLATE

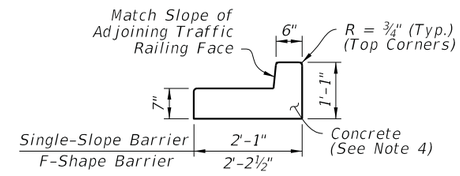

ALIGNMENT CURB SECTION

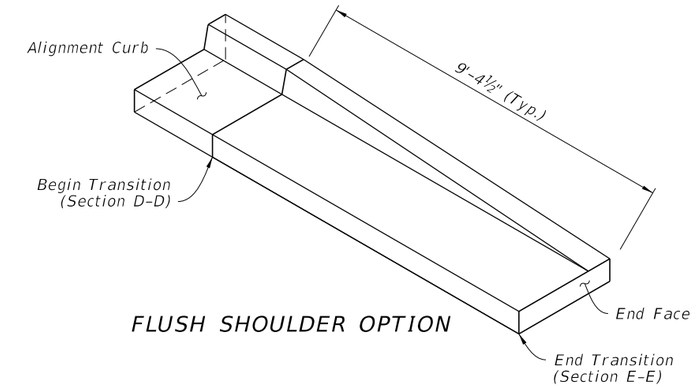

FLUSH SHOULDER OPTION

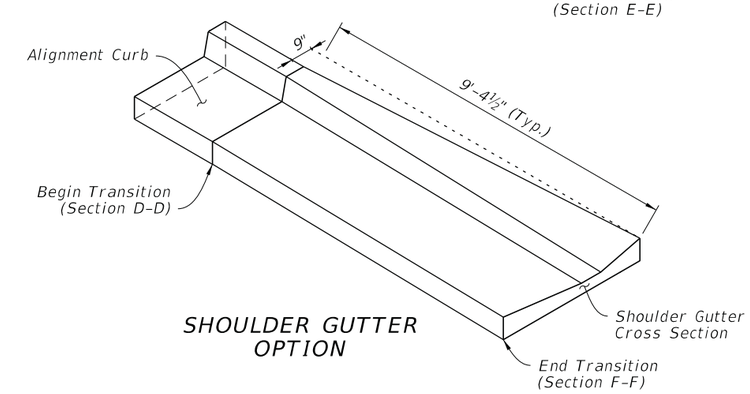

SHOULDER GUTTER OPTION

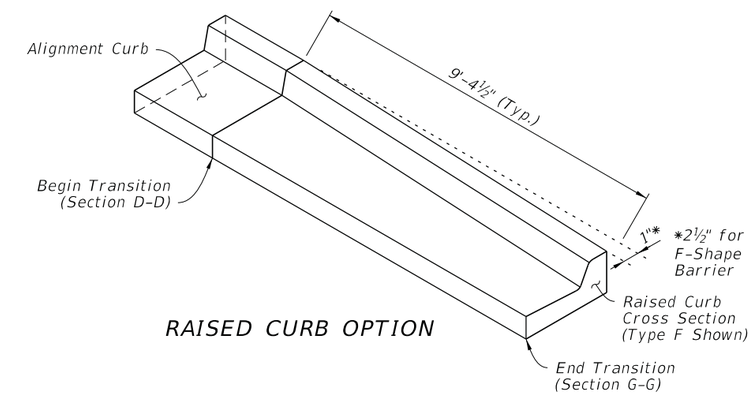

RAISED CURB OPTION

CURB TRANSITION ISOMETRIC VIEWS

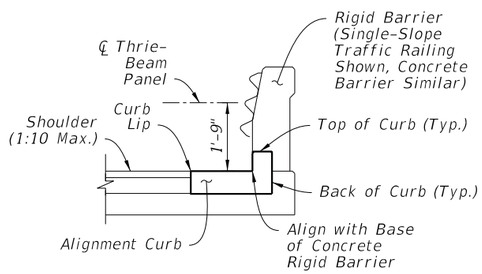

SECTION B-B
BEGIN ALIGNMENT CURB
(Mate to Rigid Barrier)

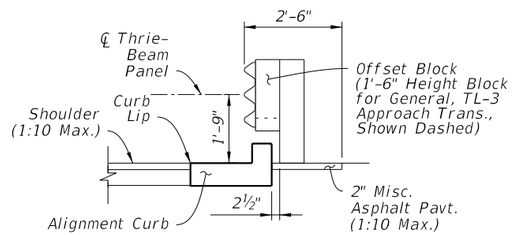

SECTION C-C
ALIGNMENT CURB
(Intermediate)

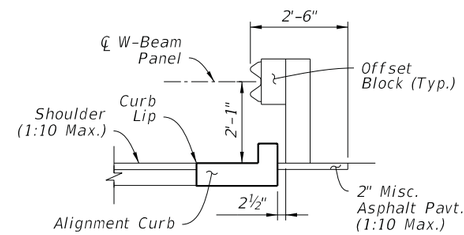

SECTION D-D
BEGIN TRANSITION
(End Alignment Curb)

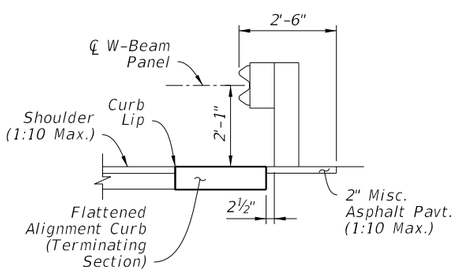

SECTION E-E
END TRANSITION
FLUSH SHOULDER OPTION

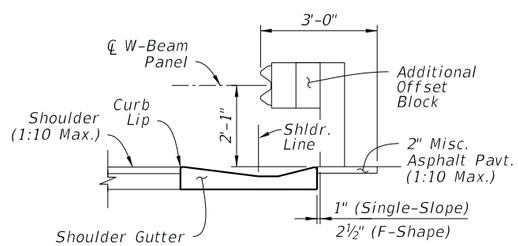

SECTION F-F
END TRANSITION
SHOULDER GUTTER OPTION

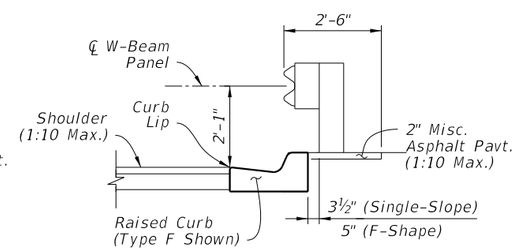

SECTION G-G
END TRANSITION
RAISED CURB OPTION

CURB TYPICAL SECTIONS

NOTES:

1. PLAN AND ELEVATION VIEWS: Work with Sheets 13 thru 16.
2. END TRANSITION OF CURB OPTION: Install one of the three End Transition types shown per Section E-E as indicated by the plans.
3. GRADING BEHIND POSTS: Place Slope Break a Min. 2'-0" behind the post, per Sheet 6.
4. MATERIALS & CONSTRUCTION: Construct the concrete Aligning Curb and Curb transition in accordance with Specification 520. Use steel Plates and Thrie-Beam Terminal Connectors in accordance with Specification 967.

APPROACH TRANSITION CONNECTION - DETAILS

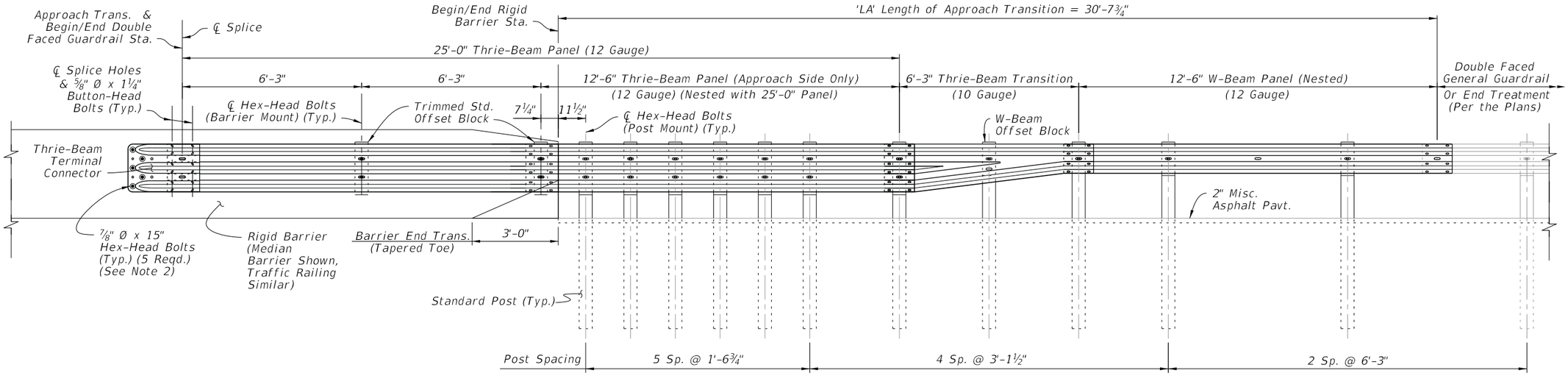

TL-3 DOUBLE FACED APPROACH TRANSITION
INSTALLED ELEVATION

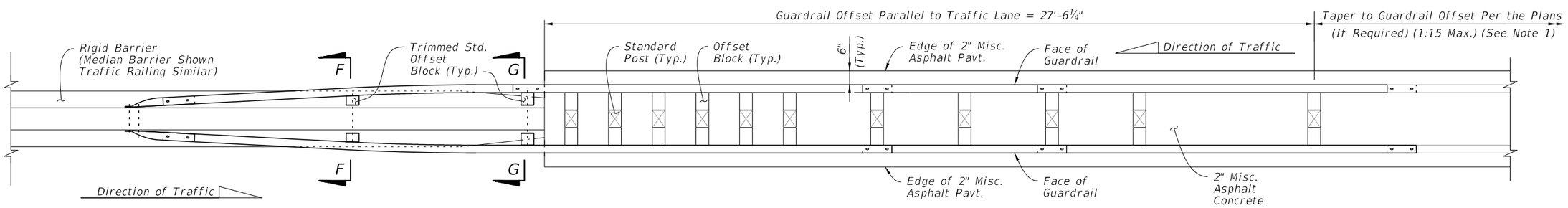

TL-3 DOUBLE FACED APPROACH TRANSITION
INSTALLED PLAN

NOTES:

1. INSTALLATION: Construct the Approach Transition segment where indicated in the plans. The required offset of the connecting adjacent guardrail is shown in the plans.

   The Layout given on Sheet 20 provides a basic scheme for connections to adjacent guardrail, where a taper to a differing guardrail offset may be required. If the adjacent guardrail has the same offset as the Approach Transition segment, then no taper is required.

2. THRIE-BEAM TERMINAL CONNECTOR: See Sheet 17 for Details. The installed bolt's threaded portion is not permitted to extend beyond 3#4" from the face of the nut; trim the threaded portion as needed and galvanize in accordance with Specification 562.

3. GENERAL GUARDRAIL: General Guardrail typically includes Panels and Post Spacing as shown on Sheet 2, including parallel and tapered segments. End Treatments or Reduced Post Spacing Guardrail segments may be substituted for the General Guardrail shown herein if indicated in the plans.

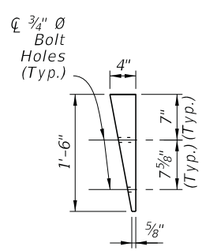

TYPE F-F
SECTION

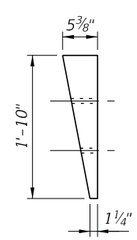

TYPE G-G
SECTION

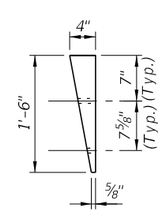

TYPE F-F
SECTION

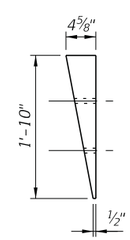

TYPE G-G
SECTION

TRIMMED STD. OFFSET BLOCKS
TIMBER POST ALIGNMENT WIDTH

TRIMMED STD. OFFSET BLOCKS
STEEL POST ALIGNMENT WIDTH

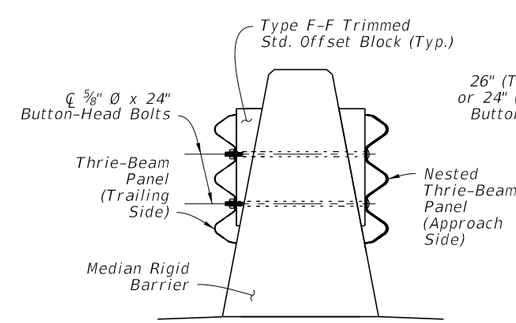

SECTION F-F

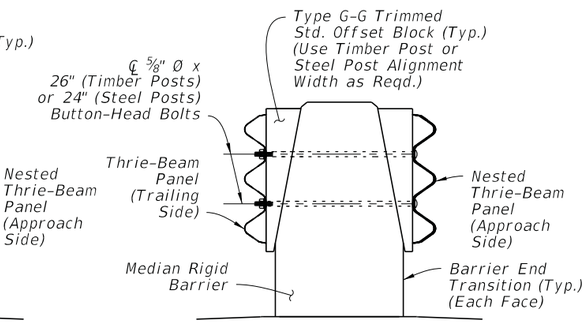

SECTION G-G

APPROACH TRANSITION CONNECTION TO RIGID BARRIER WITH DOUBLE FACED GUARDRAIL

10/6/2022 2:17:23 PM

LAST REVISION	REVISION	DESCRIPTION:			INDEX	SHEET
11/01/19			FY 2023-24 STANDARD PLANS	GUARDRAIL	536-001	18 of 24

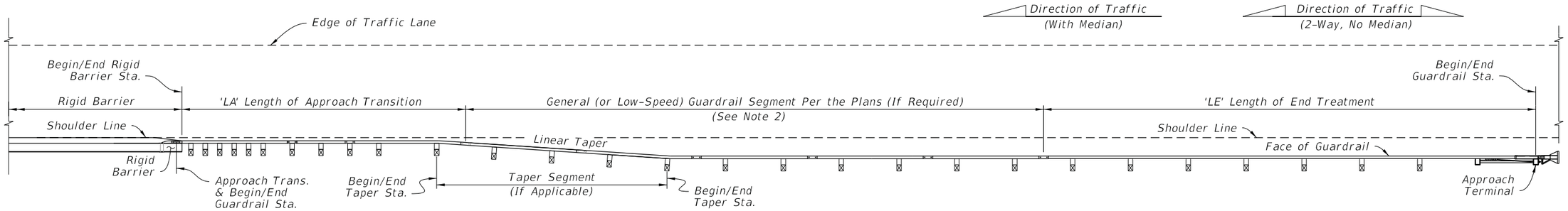

TYPE A APPROACH TO RIGID BARRIER - PLAN VIEW
MEDIAN OR OUTSIDE SHOULDERS
(Mirror Horiz. and/or Vert. for Opposite Direction and/or Side of Road)

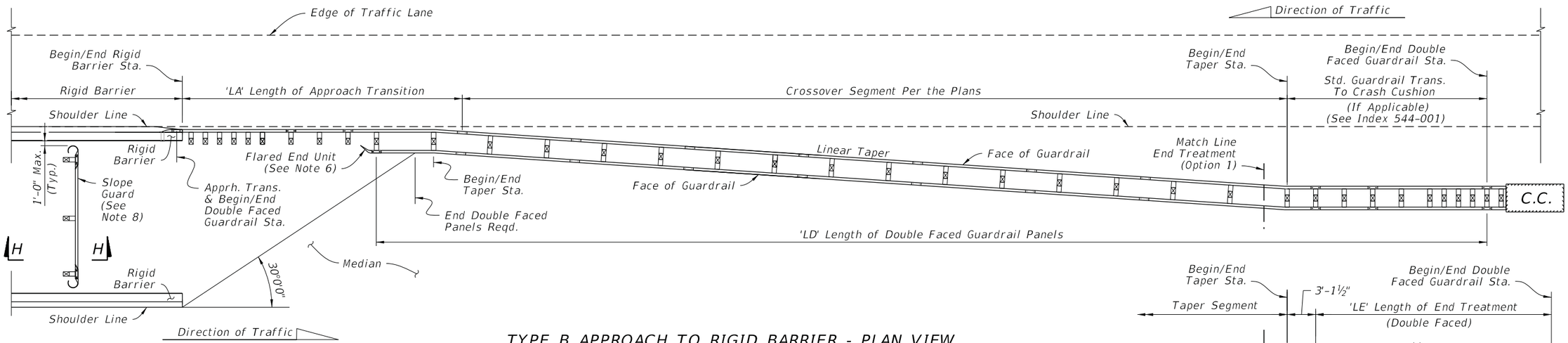

TYPE B APPROACH TO RIGID BARRIER - PLAN VIEW
CROSSOVER GUARDRAIL FOR MEDIAN SHOULDERS ONLY
DUAL BRIDGE APPROACH CONFIGURATION
(Mirror Horiz. and Vert. for Opposite Direction)

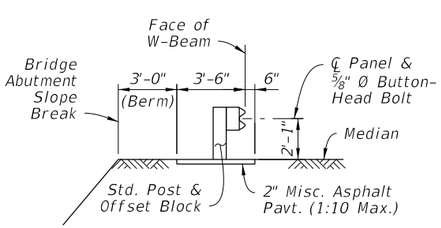

SECTION H-H
BRIDGE ABUTMENT
SLOPE GUARD
(Between Bridges)

NOTES:

1. INSTALLATION: The Plan Views shown are schematic only, showing example geometry for connecting guardrail segments including taper locations and Double Faced Guardrail requirements as applicable. Work this Sheet with the plans, where stationing and offsets for Begin/End Guardrail, Begin/End Rigid Barrier, and Begin/End Taper are specified. For existing bridge layouts, see Index 536-002, 521-404, and 521-405.

2. GENERAL (OR LOW-SPEED) GUARDRAIL SEGMENT: Construct this segment if shown in the plans. For the case where this segment's offset differs from the Approach Transition offset, linearly taper the guardrail between the Begin/End Taper Stations and offsets as specified in the plans.

   For the shortest length case of a direct connection between the End Treatment and the Approach Transition, this segment may be omitted as shown in the plans.

3. LENGTH OF APPROACH TRANSITION 'LA': Install the applicable Approach Transition as shown per Sheets 13 thru 16, where called for in the plans.

4. LENGTH OF END TREATMENT 'LE': Install the Approach Terminal End Treatment as shown per Sheet 7 or 8, where called for in the plans. Use the corresponding APL drawings for construction details.

5. CROSSOVER GUARDRAIL (FOR TYPE B APPROACH): Install the Crossover Segment tapering linearly from the Begin Taper Sta. and offset to the End Taper Sta. and offset as specified in the plans.

6. LENGTH OF DOUBLE FACED GUARDRAIL PANELS, 'LD' (FOR TYPE B APPROACH): Terminate the Double Faced Guardrail panels as shown (based upon the 30° line measured from the hazard on the opposite side of the median). Extend the panel segment longer than the dimension 'LD' as needed for the Panel's end Bolt Slot to align with a post Bolt hole.

   Install a Flared End Unit where shown, as defined on Sheet 9.

7. END TREATMENT OPTIONS (FOR TYPE B & C APPROACH): For Double Faced applications, use either a Double Faced Approach Terminal Assembly per Sheet 8 or a Crash Cushion per Index 544-001. For either Option, meet the 1:10 adjacent grading requirements for Approach Terminals as shown on Sheet 8.

8. SLOPE GUARD: Where indicated in the plans, install a Guardrail segment between bridge approaches and offset from the bridge abutment's Slope Break as shown. Install posts at the end bolt slots of the panel system. Use post spacing of either 3'-1½" or 6'-3", as needed to correctly fit system between barriers. The system may also be lengthened to fit by installing two Rounded End Units as defined on Sheet 9.

LAYOUT TO RIGID BARRIER - APPROACH ENDS

10/6/2022 2:17:24 PM

LAST REVISION	REVISION	DESCRIPTION:	FY 2023-24 STANDARD PLANS	GUARDRAIL	INDEX	SHEET
11/01/19					536-001	19 of 24

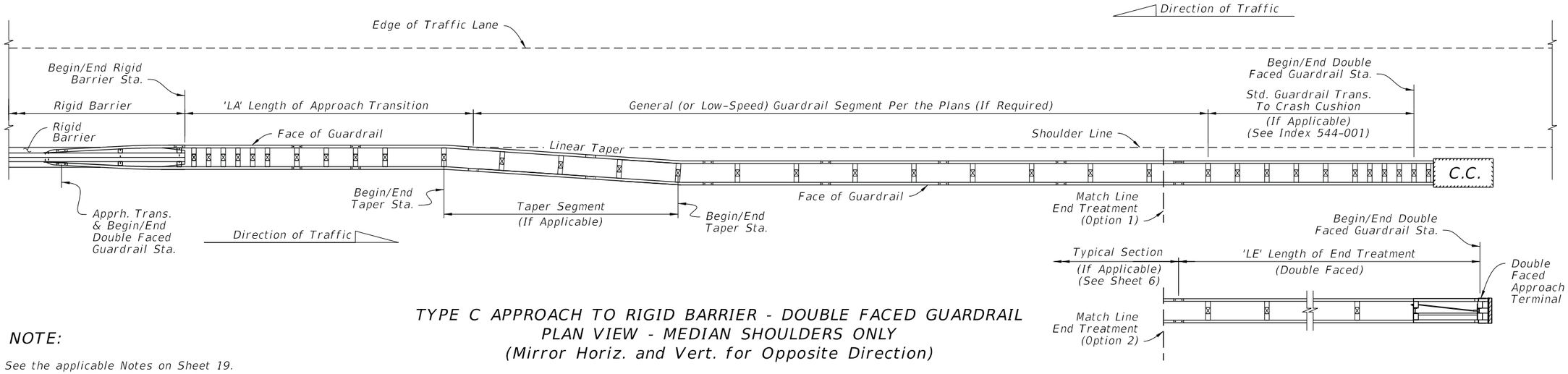

TYPE C APPROACH TO RIGID BARRIER - DOUBLE FACED GUARDRAIL
PLAN VIEW - MEDIAN SHOULDERS ONLY
(Mirror Horiz. and Vert. for Opposite Direction)

NOTE:

See the applicable Notes on Sheet 19.

LAYOUT TO RIGID BARRIER - APPROACH ENDS WITH DOUBLE FACED GUARDRAIL

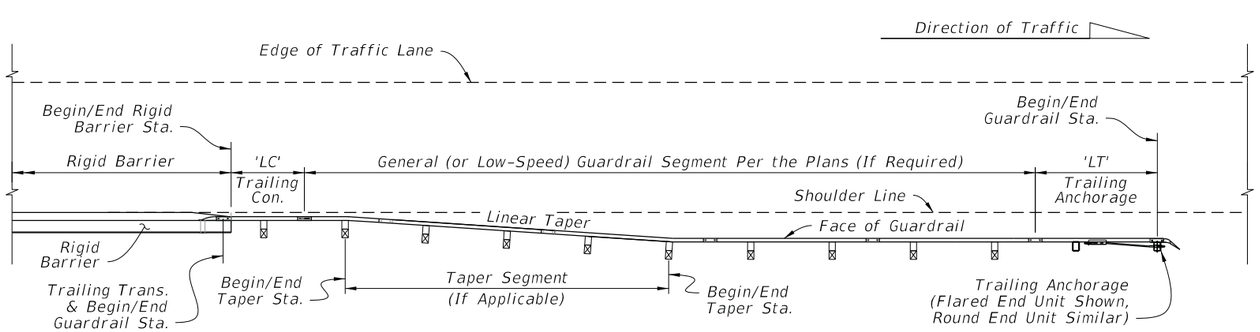

TYPE D TRAILING CONNECTION FROM RIGID BARRIER
PLAN VIEW - MEDIAN OR OUTSIDE SHOULDER
(Mirror Horiz. and/or Vert. for Opposite Direction and/or Side of Road)

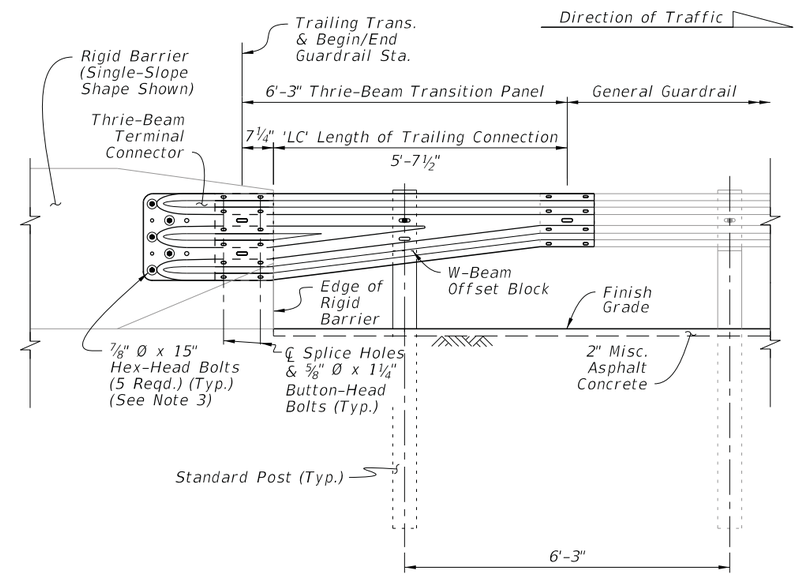

TRAILING END TRANSITION CONNECTION
TO RIGID BARRIER - INSTALLED ELEVATION

NOTES:

1. See the applicable Notes on Sheet 19.
2. LENGTH OF TRAILING ANCHORAGE, 'LT': Install the Trailing Anchorage as shown on Sheet 9, where called for in the plans.
3. THRIE-BEAM TERMINAL CONNECTOR: Install connector and bolts as shown on Sheet 17.
4. RIGID BARRIER SINGLE SLOPE END FACE: See Concrete Barrier Wall, Index 521-001, and Traffic Railing, Indexes 521-422 and 521-423, for details.

LAYOUT TO RIGID BARRIER - TRAILING ENDS

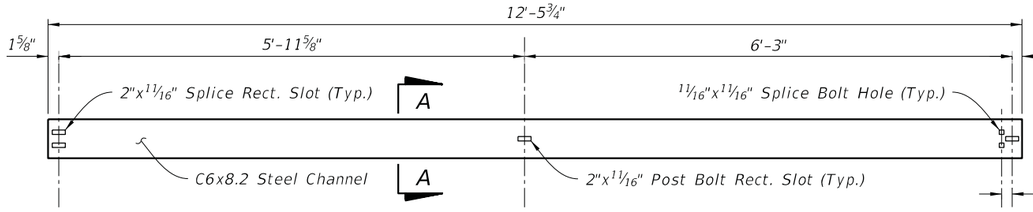

PANEL ELEVATION

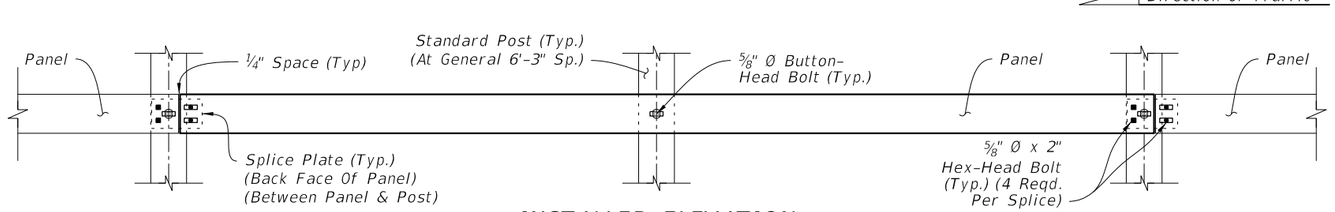

INSTALLED ELEVATION

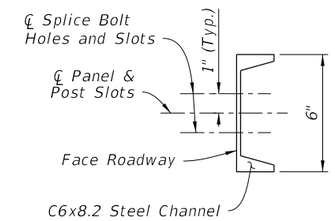

SECTION A-A
(Panel Typical)

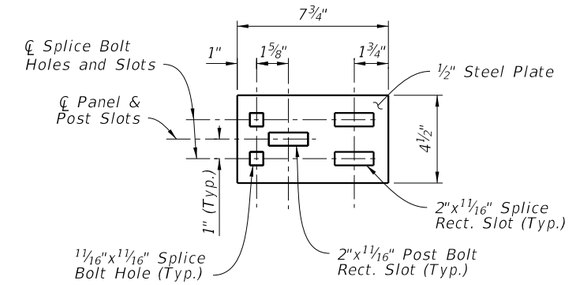

SPLICE PLATE
ELEVATION

CHANNEL SECTION RUB RAIL

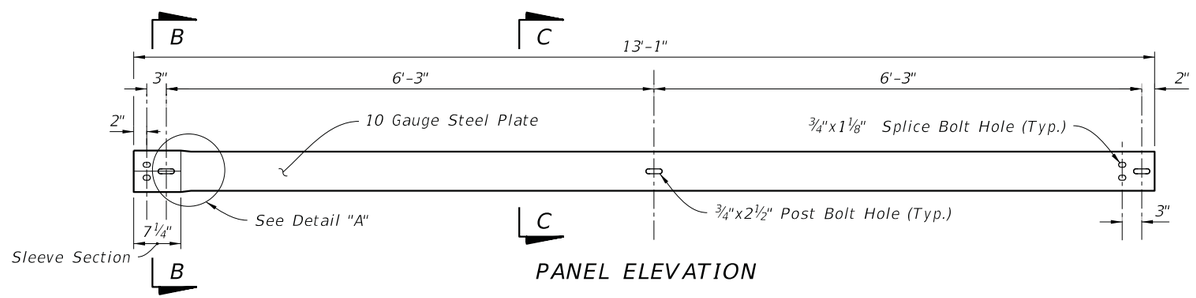

PANEL ELEVATION

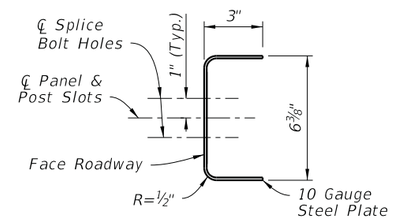

SECTION B-B
(Panel Sleeve End)

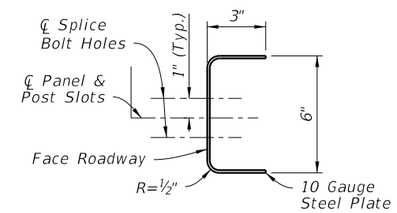

SECTION C-C
(Panel Typical)

PANEL PLAN

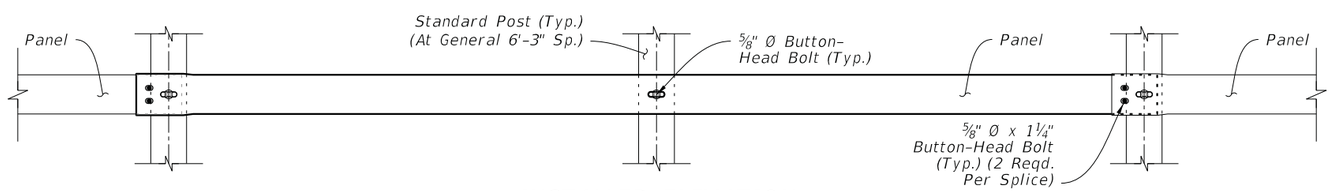

INSTALLED ELEVATION

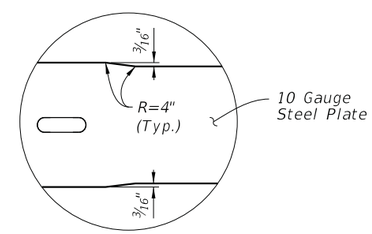

DETAIL "A"
(Sleeve Transition Elevation)

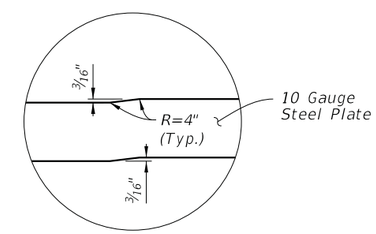

DETAIL "B"
(Sleeve Transition Plan)

BENT-PLATE PANEL RUB RAIL

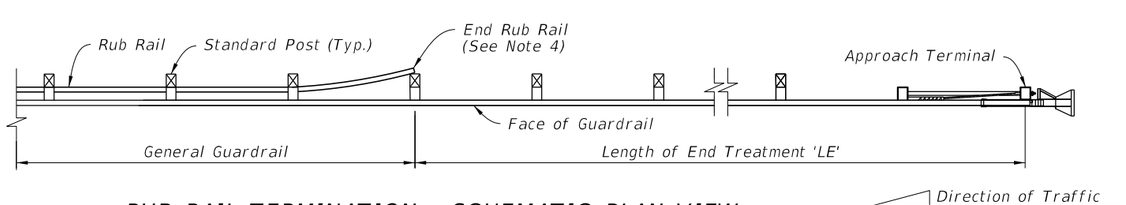

RUB RAIL TERMINATION - SCHEMATIC PLAN VIEW

NOTES:

1. GENERAL: Install Rub Rail where called for in the plans. Position as shown on Sheet 6 unless otherwise shown in the plans. Install the backs of Rub Rail panels flush against Standard Posts. Either of the Channel Section or Bent-Plate Panel Rub Rail options may be used (consistent type per project). Where Double Sided Rub Rail is called for, thread the Button-Head Bolt through the Post Bolt Hole(s) and the panels on either side, and tighten the nut against the face of the panel farthest from adjacent traffic lanes. Trim the bolt's threaded portion in accordance with Note 4 on Sheet 5.
2. MOUNTING HEIGHT: Mount to the Standard Post's Rub Rail Bolt Hole as defined on Sheet 5.
3. MATERIALS: Use steel components in accordance with Specification 967.
4. END RUB RAIL: For Single Sided Rub Rail, terminate the run of Rub Rail by bending the panel behind the post and securing in place (as shown). For Double Sided Rub Rail, terminate the runs of Rub Rail on their respective front face of the post and secure with the typical Button-Head bolt.

RUB RAIL DETAILS

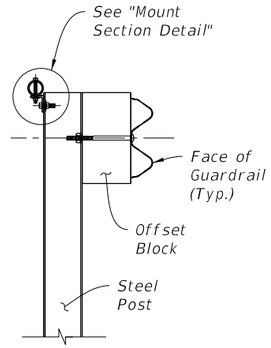

GENERAL PIPE RAIL SECTION

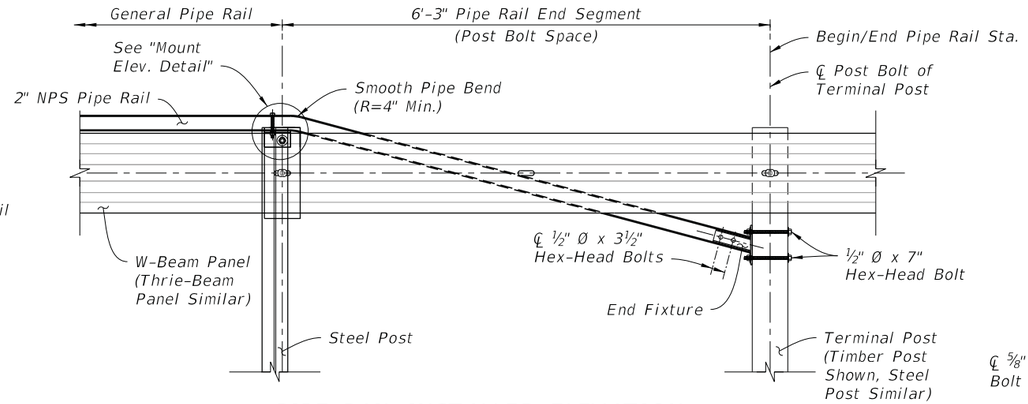

PIPE RAIL INSTALLED ELEVATION
(End Segment Shown)

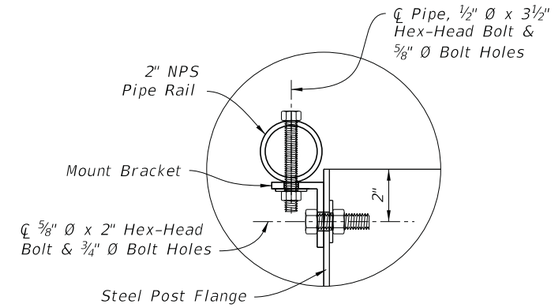

MOUNT SECTION DETAIL

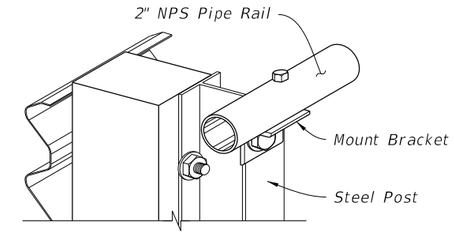

MOUNT ISOMETRIC
CUT-AWAY

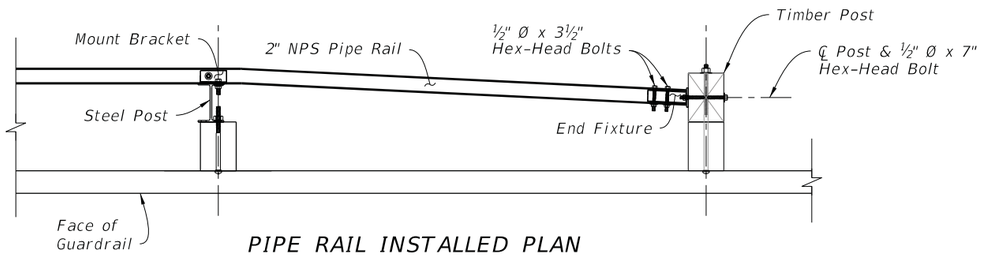

PIPE RAIL INSTALLED PLAN
END AT TIMBER POST OPTION

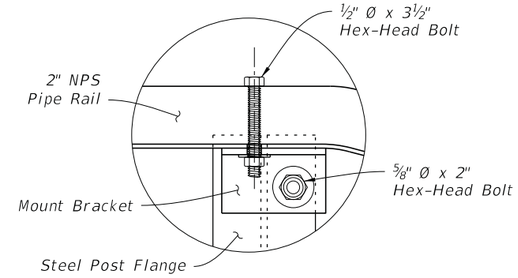

MOUNT ELEVATION DETAIL
(Back View - Mirrored)

NOTES:

1. GENERAL: Install General Pipe Rail where indicated in the plans or when existing sidewalks or shared use paths are located less than 4'-0" from the back of Steel Posts as shown on Sheet 6.

2. PIPE RAIL END SEGMENTS: Place End Segments on both ends of General Pipe Rail runs, with End Fixtures mounted to Terminal Posts located outside of Approach Terminal Assembly ('LE'), Trailing Anchorage Assembly ('LT'), and Approach Transition ('LA') segments.

3. MATERIALS: Use steel brackets, fixtures, and pipes in accordance with Specification 967.

4. RAIL SPLICES: Install Rail Splices to join pieces of 2" NPS Pipe Rail into a continuous system. Place splices as needed, at a spacing of 18'-0" or greater. Orient the head of bolt on the top of the pipe.

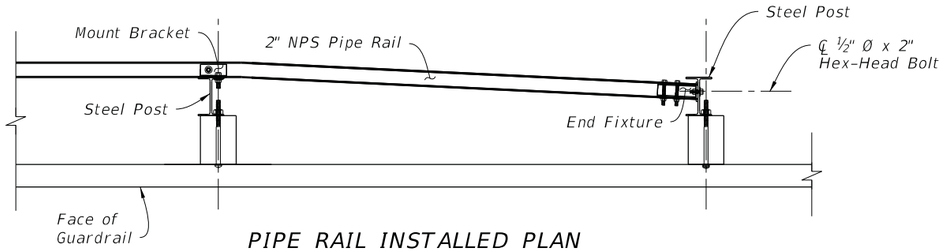

PIPE RAIL INSTALLED PLAN
END AT STEEL POST OPTION

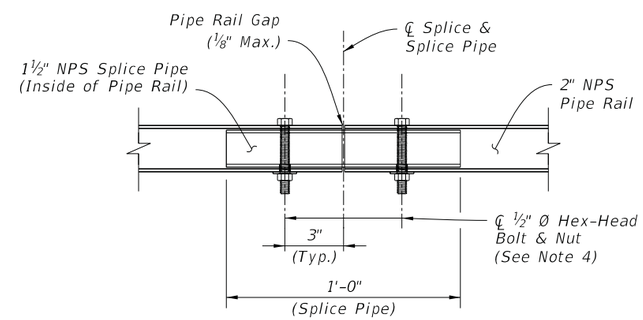

RAIL SPLICE DETAIL

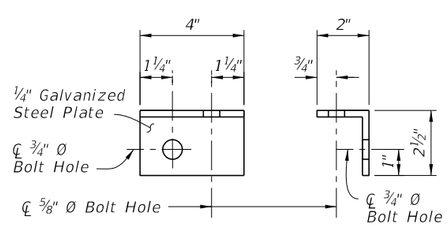

MOUNT BRACKET DETAIL

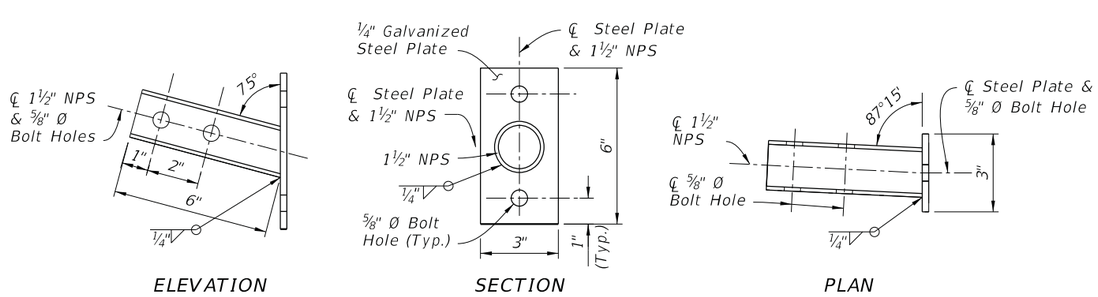

END FIXTURE DETAIL

PEDESTRIAN SAFETY TREATMENT - PIPE RAIL

LAST REVISION	REVISION	DESCRIPTION:			INDEX	SHEET
11/01/19			FY 2023-24 STANDARD PLANS	GUARDRAIL	536-001	22 of 24

10/6/2022 2:17:27 PM

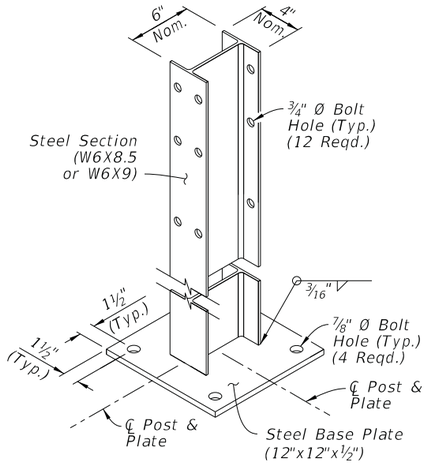

ISOMETRIC VIEW

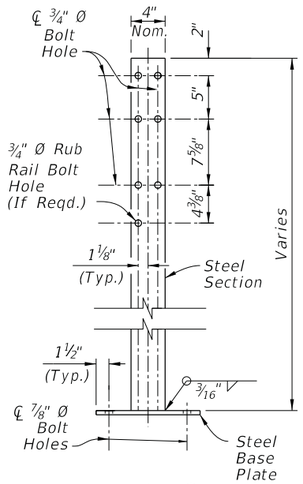

ELEVATION

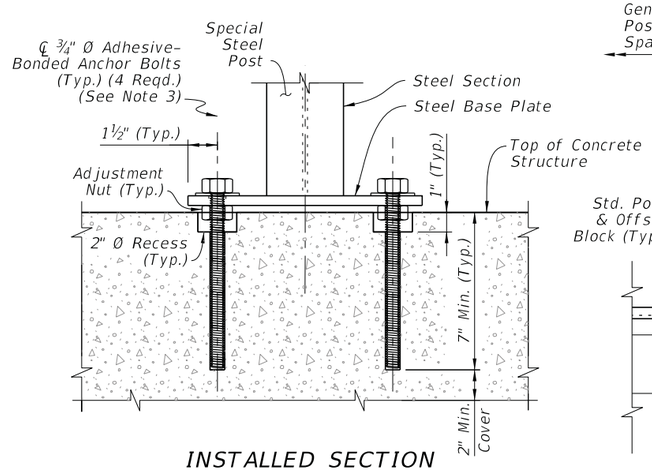

INSTALLED SECTION
(Option 2, Special Post)

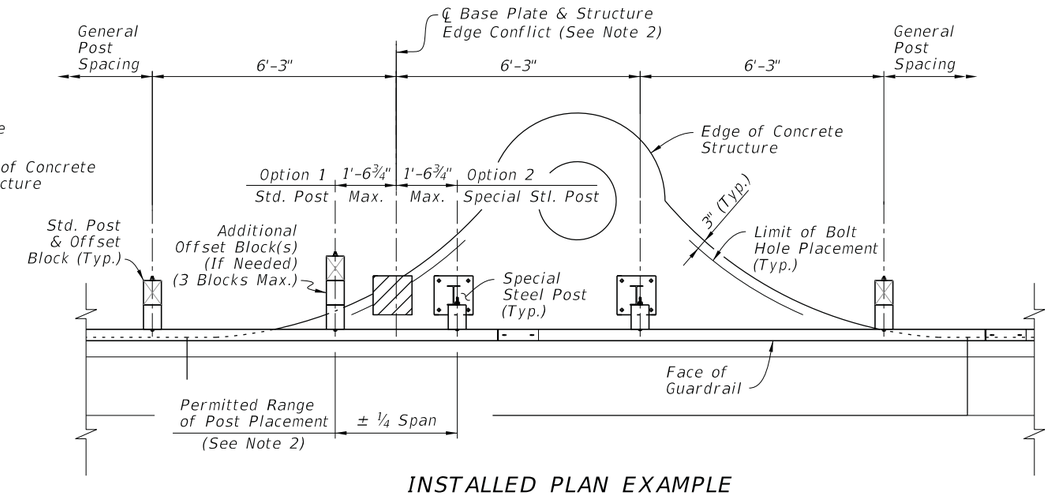

INSTALLED PLAN EXAMPLE
(Curb Inlet Top Type 2 Shown)

SPECIAL STEEL POST

STRUCTURE MOUNTING

NOTES:

1. INSTALLATION: When the construction of Guardrail at the required post spacing results in post(s) located atop culverts, inlets, pier footings, or similar concrete structures, a Special Steel Post may be substituted for a Standard Post. Install where shown in the plans and/or as-needed, in accordance with Specification 536.

2. EDGE CONFLICT: When a required post location causes an Edge Conflict with the structure, where the Steel Base Plate is not located entirely on the structure at least 3" from the Edge of Concrete, the longitudinal post location may be altered by up to 1'-6¾" (Quarter Span) from the original required spacing location to prevent the Edge Conflict. With the post location adjusted, use a Std. Post mounted in soil (Option 1) or a Special Steel Post with its Base Plate mounted entirely on the structure (Option 2). Maintain the original required spacing locations upstream and downstream of the structure.

3. BASE PLATE MOUNT: Install Special Steel Posts as shown using steel Adhesive-Bonded Anchor Bolts in accordance with Specification 536. Use ¾" Hex-Head Bolts for structures less than 9" deep as defined in the Specification.

4. PANEL MOUNT TO ADJUSTED POST: Punch additional ¾"x2½" Post Bolt Slot(s) in the W-Beam or Thrie-Beam Panel only where needed to mount the panel to a post in an adjusted location. Meet the Panel Post Bolt Slots requirements of Specification 536.

5. MATERIALS: Use steel base plates in accordance with Specification 536.

SPECIAL STEEL POST FOR CONCRETE STRUCTURE MOUNT

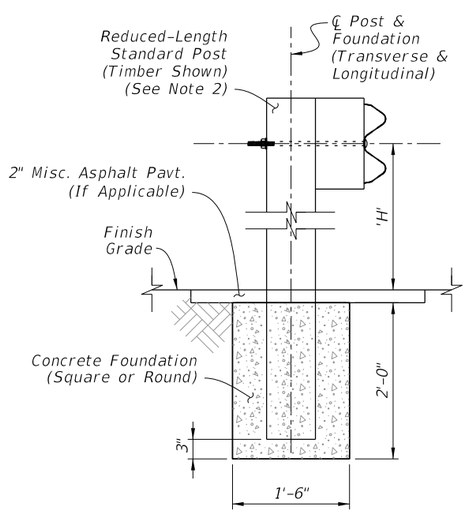

INSTALLED SECTION

NOTES:

1. INSTALLATION: When the construction of Guardrail at the required post spacing results in post(s) conflicting with underground utilities or other underground obstructions, an Encased Post may be used where a 2'-0" depth will avoid the conflict. Install where shown in the plans and/or as-needed, in accordance with Specification 536.

2. REDUCED-LENGTH STANDARD POST: Use a Standard Post with reduced Length such that the Panel Height 'H' is maintained while the post bottom terminates 3" from the bottom of the Concrete Foundation. Typically, the Post Length 'L' is 4'-7" for W-Beam Guardrail.

3. FOUNDATION: Use non-reinforced Class NS Concrete material in accordance with Specification 347. After casting the concrete, ensure the surrounding soil material is completely backfilled and tamped to provide full passive resistance.

4. LIMIT: Encased Posts are not permitted for more than 3 consecutive posts.

ENCASED POST FOR SHALLOW MOUNT

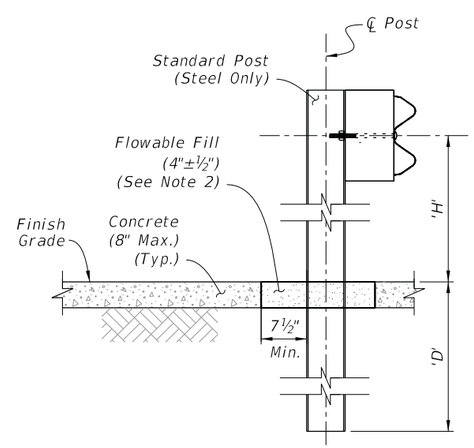

INSTALLED SECTION

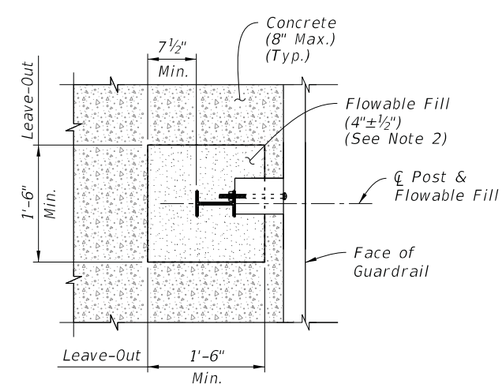

INSTALLED PLAN

NOTES:

1. INSTALLATION: When the construction of Guardrail at the required post spacing results in post(s) placed within a concrete surface (typically a sidewalk), use a Frangible Leave-Out around the post base as shown. Install where shown in the plans and/or as-needed, in accordance with Specification 536.

   Use Standard steel posts. Timber posts are not permitted for frangible leave-outs.

   For the required 1'-6" x 1'-6" Leave-Out, smoothly cut the existing concrete surface or form-up the square shape when an application has new surrounding concrete.

   Ensure Flowable Fill surface is smooth and even with the adjacent concrete surface.

2. MATERIALS: Use Non-Excavatable Flowable Fill in accordance with Specification 121, not to exceed 150 psi.

FRANGIBLE LEAVE-OUT FOR CONCRETE SURFACE MOUNT

12/13/2022 8:36:50 AM

NOTES:

1. INSTALLATION: Install Barrier Delineators as shown in accordance with the plans, with Specifications 536 and 705, and with the manufacturer's design as approved on the APL.

2. MATERIALS: Use materials of the size and type defined for Barrier Delineators in Specification 993.

3. COLOR: Use either white or yellow retroreflective sheeting to match the color of the nearest lane's edgeline.

4. MOUNT LOCATIONS: Mount Barrier Delineators atop posts as shown, starting with Post (3) of Approach Terminals and incrementally increasing spacing towards the downstream direction. Install the Barrier Delineators at the following spacing:

   S1 = 25' x 1 Space
   S2 = 50' x 1 Space
   S3 = 75' x 1 Space
   S4 = 100' x for the Remaining Run

   Additionally, place a Barrier Delineator on Post (2) of the Trailing Anchorage or on the post nearest the Rigid Barrier.

5. MEDIAN GUARDRAIL: Install retroreflective sheeting on both sides of the barrier delineator for Guardrail on medians.

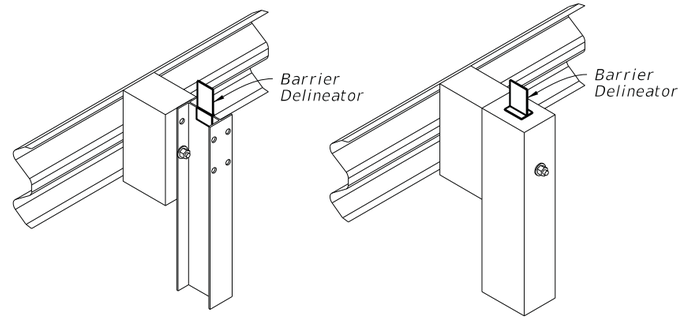

STEEL POSTS TIMBER POSTS

MOUNT LOCATION - ISOMETRIC VIEWS

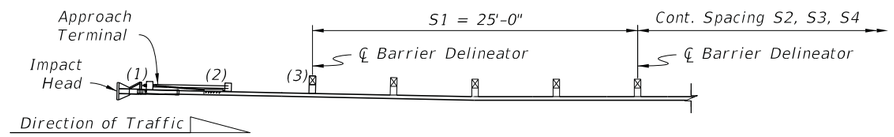

MOUNT LOCATION - PLAN VIEW

BARRIER DELINEATORS

NOTES:

1. INSTALLATION:
   Work these details with the plans, where Stationing for Begin/End Half Spacing and Begin/End Quarter Spacing are indicated if required.

   Where the Begin/End Stations indicated in the plans do not correspond exactly to post locations in construction, extend the Reduced Post Spacing segment to the nearest post(s) before the Begin Station and/or after the End Station called for.

2. PANEL SPLICES: Midspan Panel Splices are not required in Transition and Reduced Post Spacing segments, however they are required for General segments. To place midspan splices in General segments, use one Non-General panel length (9'-4½" or 15'-7½") or add an additional Transition spaced post where required.

3. LOW-SPEED GUARDRAIL: For Reduced Post Spacing with Low-Speed Guardrail (12'-6" post spacing), the Reduced Spacing pattern requires a 6'-3" space between the 12'-6" and 3'-1½" spaces.

4. PANEL POST BOLT SLOTS:
   For Quarter Spacing configurations, punch additional ¾"x2½" Post Bolt Slots in the panels only where required for mounting and in accordance with Specification 536.

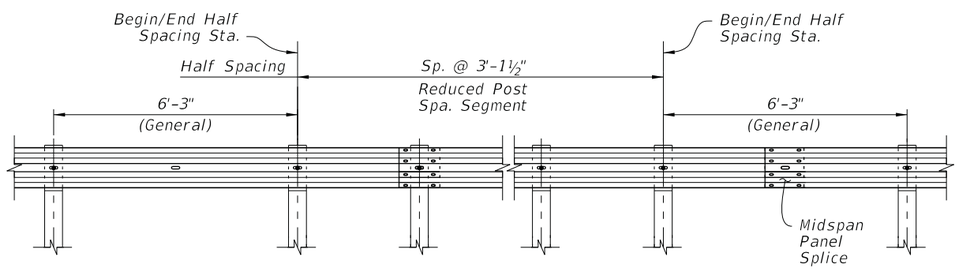

DETAIL 'S' - HALF SPACING ELEVATION
(AS REQD. PER THE PLANS)

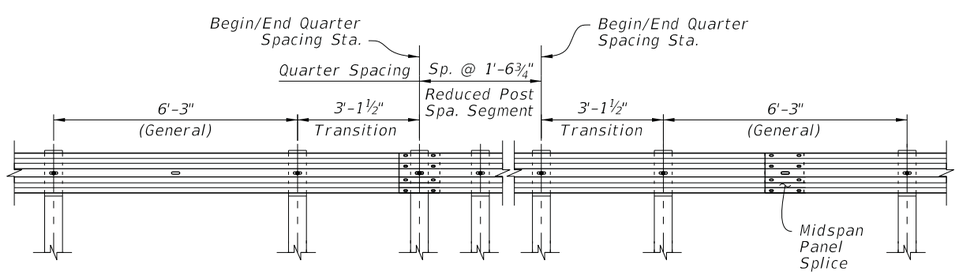

DETAIL 'S' - QUARTER SPACING ELEVATION
(AS REQD. PER THE PLANS)

REDUCED POST SPACING FOR HAZARDS

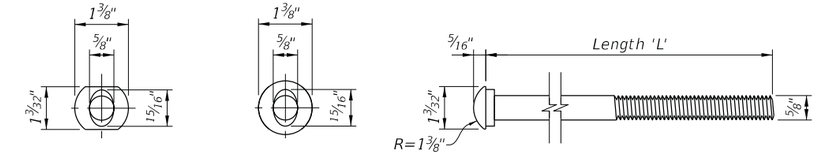

ELEVATION OPTION 1 ELEVATION OPTION 2 PROFILE (Option 1 Shown)

BUTTON-HEAD BOLT

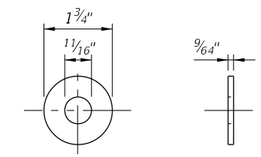

ELEVATION PROFILE

WASHER

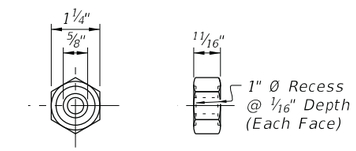

ELEVATION PROFILE

HEX-NUT

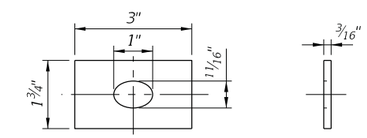

ELEVATION PROFILE

RECTANGULAR WASHER
(For CRT & Terminal Connectors Where Shown - Install Over Panel Face)

BUTTON-HEAD BOLT LENGTHS:

Application(s):	Length 'L':	Min. Thread Length:
Panel Splice	1¼"	Full Length
Steel Post Mount - Single Faced Guardrail	10"	4"
Timber Post Mount - Single Faced Guardrail	18"	4"
Steel or Timber Post Mount - Double Faced Guardrail	25"	4"

NOTES:

1. Use nuts, bolts, and washers in accordance with Specification 967.

2. For Steel Posts with Double Faced Guardrail, the single 25" Length bolt (one bolt thru both post flanges) may be replaced with two 10" Length bolts (one bolt per post flange).

3. Use bolts listed in Table 2 in corresponding locations shown in this Index.

5/8" BUTTON-HEAD BOLT

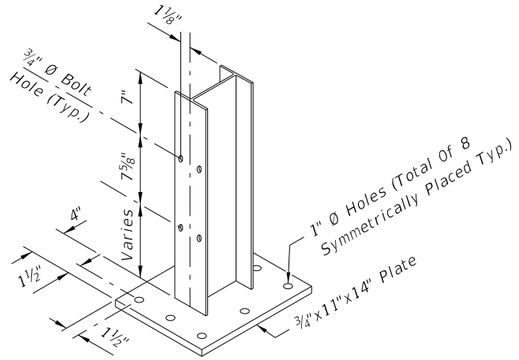

PICTORIAL

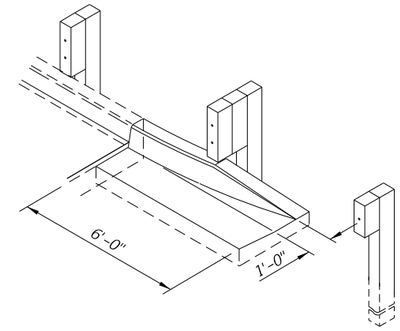

CURB TYPE F FLARE WHEN END OF EXISTING APPROACH SLAB CURB EXPOSED

GENERAL NOTES

1. This index provides guardrail transition details for approach and trailing end guardrail connections to existing bridges, including details for connecting to traffic railing retrofits and safety shape barriers on existing bridges. Sheets 1 through 26 apply to bridges with retrofitted traffic railings (Sheet 26 shows the trailing end guardrail connections). Sheets 27 and 28 apply to bridges with safety shape traffic railing, and they provide approach and trailing end transition connection details for guardrail. Construct these guardrail transitions and connections where called for in the plans.

2. For miscellaneous guardrail components and construction details that are not provided in this Index, refer to Index 536-001.

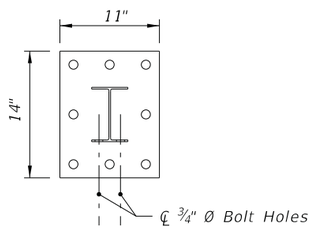

TOP VIEW

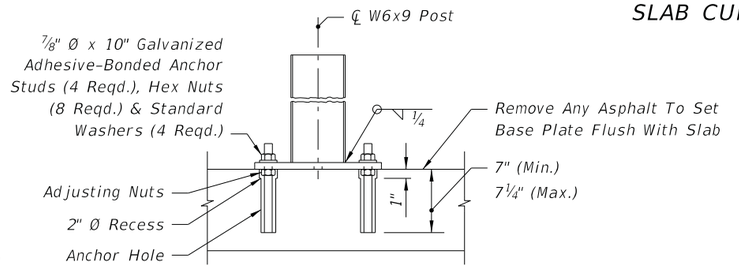

SIDE VIEW

SPECIAL STEEL POST FOR ROADWAY THRIE-BEAM TRANSITIONS TO BRIDGE TRAFFIC RAILING RETROFITS

NOTES FOR GUARDRAIL TRANSITIONS CONNECTING TO TRAFFIC RAILING RETROFITS ON EXISTING BRIDGES

1. The transition detail shown on this sheet shows (a) the standard post spacings within the typical thrie-beam approach transitions connecting to existing bridges with retrofit traffic railings, and (b) depict the typical alignments of the approach transitions.

2. The curb and gutter flare shown on this sheet is typical of flares that are to be constructed when approach slab curbs extend to the beginning of the slab, and where other treatment to curb blunt ends are not in place.

3. The special steel post for roadway thrie-beam transitions detailed on this sheet is specific to all transition applications on this index that require one or more steel posts.

   The special steel post and base plate assembly shall be fabricated in accordance with Specification 967.

   Anchor studs shall be fully threaded rods in accordance with ASTM F1554 Grade 36 or ASTM A193 Grade B7. All nuts shall be heavy hex in accordance with ASTM A563 or ASTM A19

4. Anchor studs and nuts shall be hot-dip zinc coated in accordance with the Specifications. After the nuts have been snug tightened, the anchor stud threads shall be single punch distorted immediately above the top nuts to prevent loosening of the nuts. Distorted threads shall be coated with a galvanizing compound in accordance with the Specifications.

   Adhesive bonding material systems for anchors shall comply with Specification 937 and be installed in accordance with Specification 416.4. Nested beam extensions and points for terminal connector attachments will vary for traffic railing barrier vertical face retrofits. The plan views for the vertical face retrofit barriers show the primary configurations for each particular scheme. The associated pictorial views show the variations.

5. For installing thrie-beam terminal connector to traffic railing vertical face retrofits, see notations on Sheets 15 through 18 and the flag notation on Sheet 26.

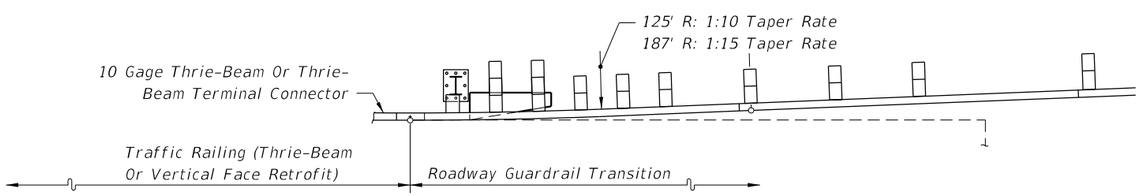

APPROACH SLAB WITHOUT CURB

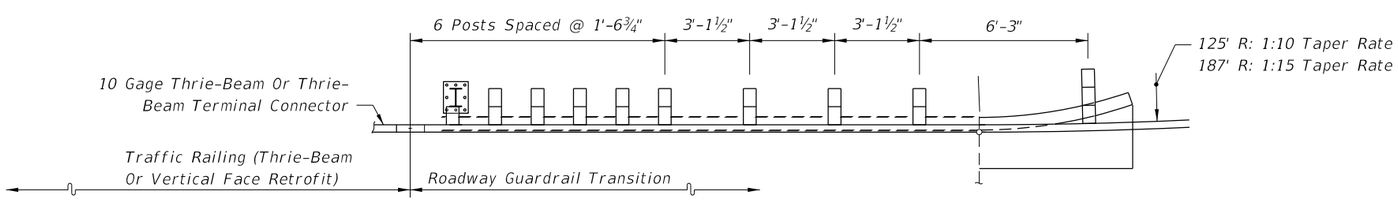

APPROACH SLAB WITH CURB

Longitudinal Location Of Transition Blocks And Curb End Flares Will Vary With Scheme Type

PARTIAL PLAN VIEWS

GUARDRAIL TRANSITION ALIGNMENTS FOR BRIDGE THRIE-BEAM AND VERTICAL FACE TRAFFIC RAILING RETROFIT

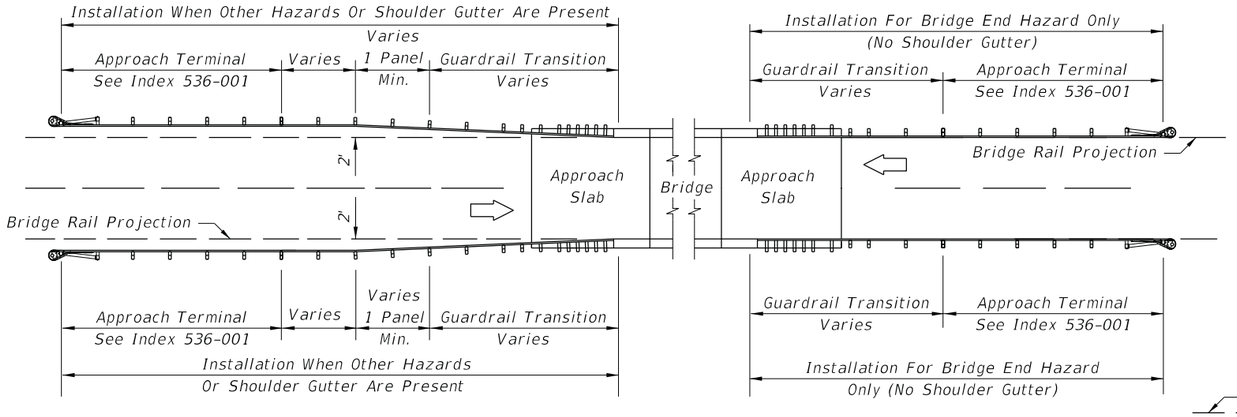

UNDIVIDED ROADWAY - DETAIL H

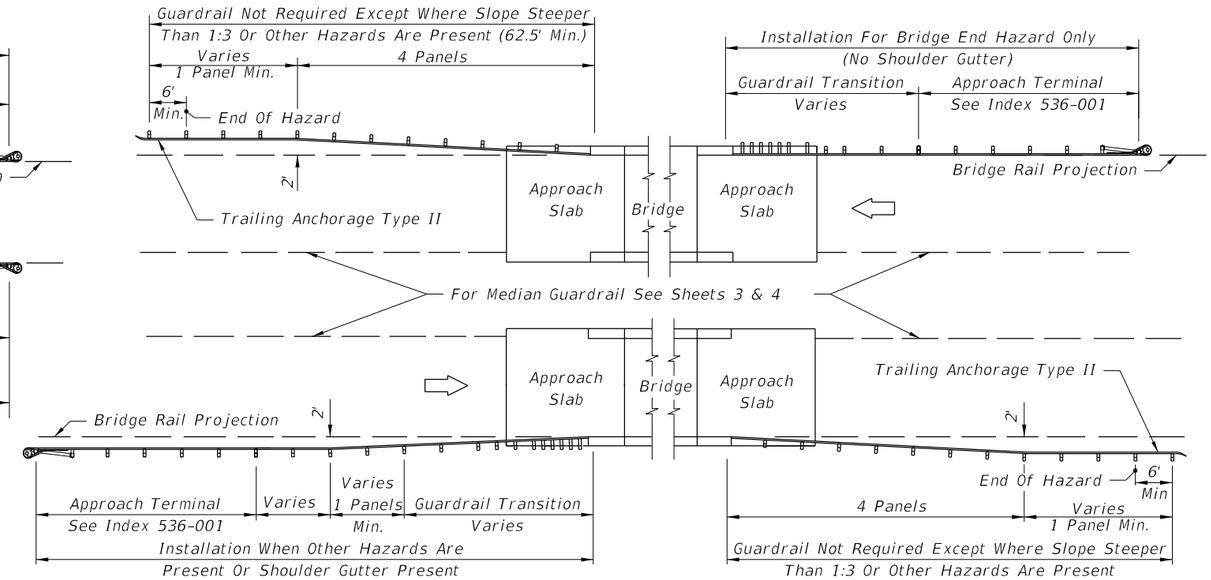

DIVIDED ROADWAY - DETAIL I

GUARDRAIL APPLICATIONS FOR BRIDGES WITH FULL WIDTH SHOULDERS AND SAFETY SHAPE TRAFFIC RAILING BARRIER EXTENDING LESS THAN FULL APPROACH SLAB LENGTH

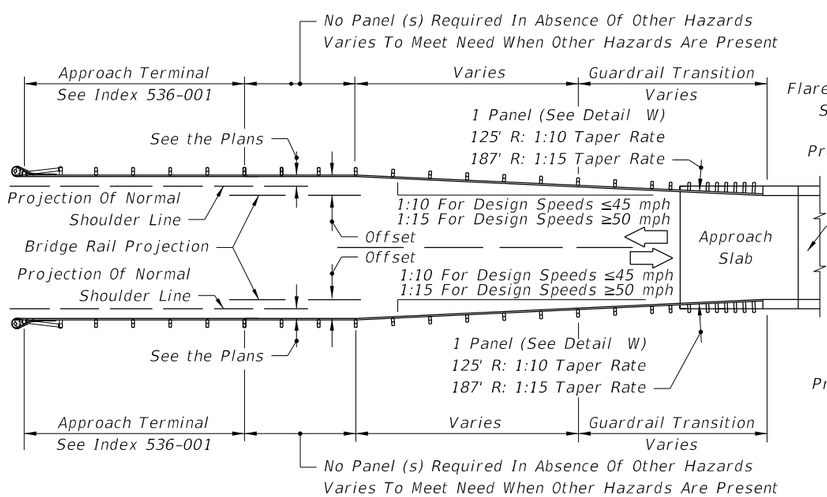

UNDIVIDED ROADWAY - DETAIL S

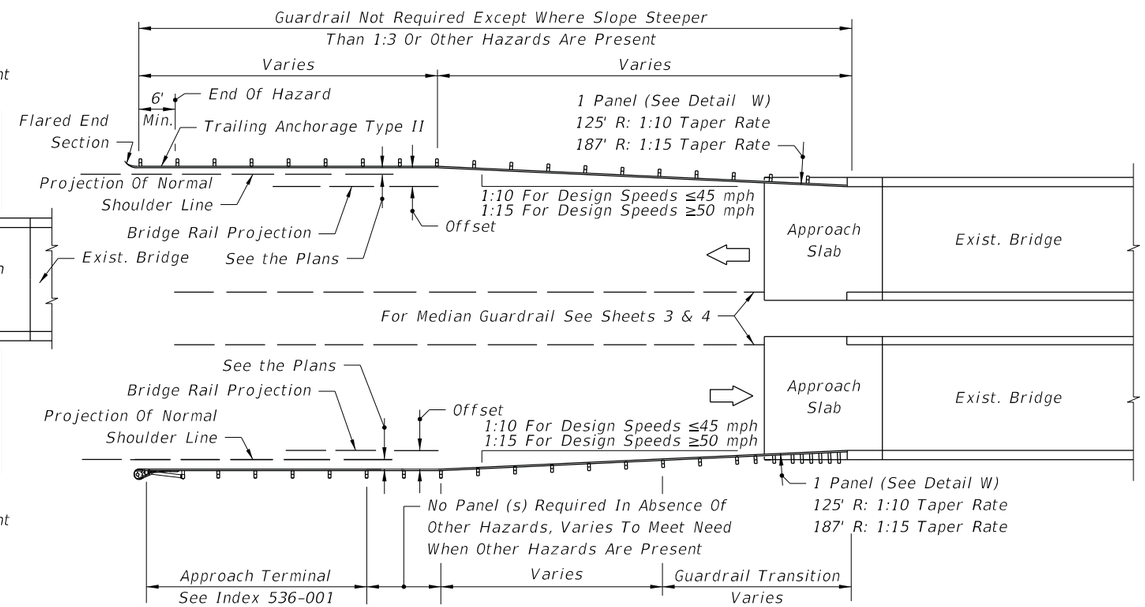

DIVIDED ROADWAY - DETAIL T

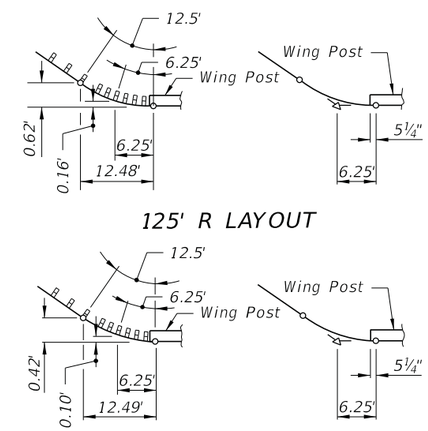

STANDARD PANELS SET TO RADIALS ADJOINING BRIDGES DETAIL W

GUARDRAIL APPLICATIONS FOR BRIDGES WITH LESS THAN FULL WIDTH SHOULDERS AND CONCRETE TRAFFIC RAILING EXTENDING LESS THAN FULL APPROACH SLAB LENGTH

10/6/2022 2:18:09 PM

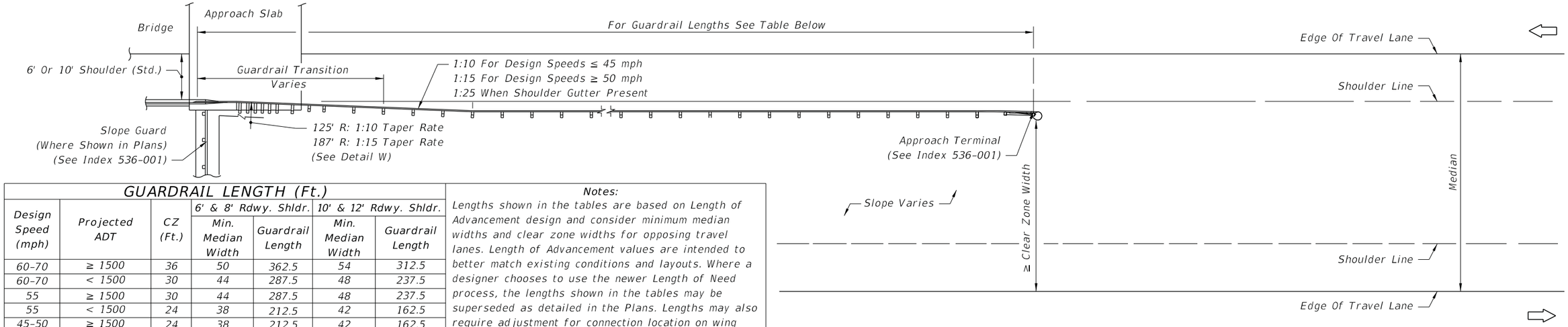

GUARDRAIL LENGTH (Ft.)						
Design Speed (mph)	Projected ADT	CZ (Ft.)	6' & 8' Rdwy. Shldr.		10' & 12' Rdwy. Shldr.	
			Min. Median Width	Guardrail Length	Min. Median Width	Guardrail Length
60-70	≥ 1500	36	50	362.5	54	312.5
60-70	< 1500	30	44	287.5	48	237.5
55	≥ 1500	30	44	287.5	48	237.5
55	< 1500	24	38	212.5	42	162.5
45-50	≥ 1500	24	38	212.5	42	162.5
45-50	< 1500	20	34	162.5	38	112.5
45-50	Urban w/o Curb	24	38	212.5	42	162.5
35-40	Urban w/o Curb	18	32	162.5	36	100.0

Notes:
Lengths shown in the tables are based on Length of Advancement design and consider minimum median widths and clear zone widths for opposing travel lanes. Length of Advancement values are intended to better match existing conditions and layouts. Where a designer chooses to use the newer Length of Need process, the lengths shown in the tables may be superseded as detailed in the Plans. Lengths may also require adjustment for connection location on wing post or bridge traffic railing barrier, auxiliary lanes, skewed crossings, and other hazards if present.

Note: For Approach Terminals, see sheets elsewhere in this Index and the plans.

WHEN END TERMINAL IS OUTSIDE OF OPPOSING ROADWAY CLEAR ZONE

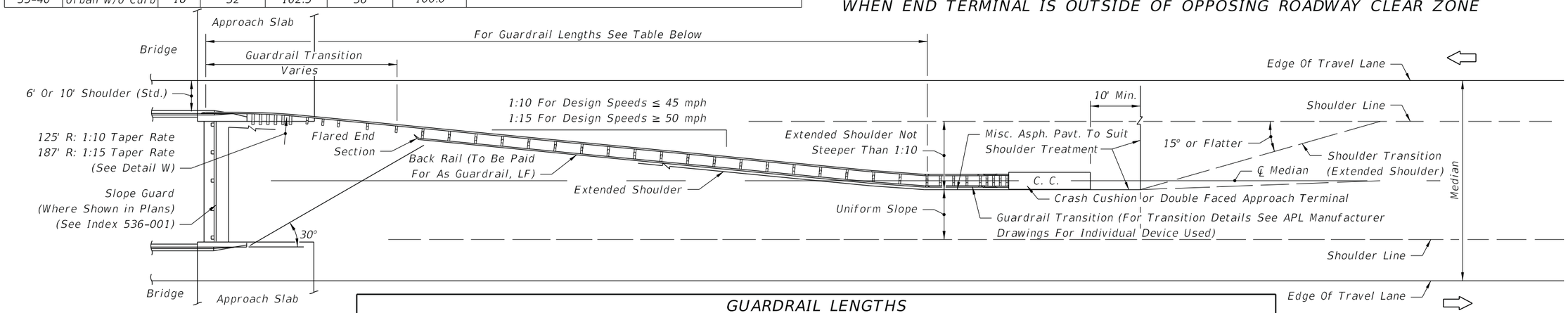

GUARDRAIL LENGTHS																
Median Width (ft.)	1:10 TAPER RATE								1:15 TAPER RATE							
	6' Bridge Shoulder				10' Bridge Shoulder				6' Bridge Shoulder				10' Bridge Shoulder			
	Panels (No.)			Length (Ft.)	Panels (No.)			Length (Ft.)	Panels (No.)			Length (Ft.)	Panels (No.)			Length (Ft.)
	Front	Back	Total	Total	Front	Back	Total	Total	Front	Back	Total	Total	Front	Back	Total	Total
32	7.5	6	13.5	168.75	4.5	3	7.5	93.75	11.5	9	20.5	256.25	7.5	6	13.5	168.75
34	8.5	6	14.5	181.25	5.5	4	9.5	118.75	12.5	10	22.5	281.25	7.5	6	13.5	168.75
36	9.5	7	16.5	206.25	6.5	5	11.5	143.75	13.5	11	24.5	306.25	8.5	7	15.5	193.75
38	10.5	8	18.5	231.25	7.5	6	13.5	168.75	14.5	12	26.5	331.25	10.5	9	19.5	243.75
40	10.5	8	18.5	231.25	7.5	6	13.5	168.75	16.5	13	29.5	368.75	11.5	9	20.5	256.25
42	11.5	8	19.5	243.75	8.5	6	14.5	181.25	17.5	14	31.5	393.75	12.5	10	22.5	281.25
44	12.5	9	21.5	268.75	9.5	7	16.5	206.25	18.5	15	33.5	418.75	13.5	11	24.5	306.25
46	12.5	9	21.5	268.75	10.5	8	18.5	231.25	19.5	16	35.5	443.75	14.5	12	26.5	331.25
48	14.5	11	25.5	318.75	11.5	9	20.5	256.25	20.5	16	36.5	456.25	16.5	13	29.5	368.75

The lengths shown on this table are typical for roadways with standard width shoulders and a relocated connection to the existing wing post. Length requirements shall be determined on a site specific basis for both standard width and narrow bridge shoulders and for end anchorage or end shielding use. See design notes in above table.

WHEN END TERMINAL CANNOT BE LOCATED OUTSIDE OF OPPOSING ROADWAY CLEAR ZONE

APPROACH GUARDRAIL TREATMENTS FOR BRIDGES WITH CONCRETE TRAFFIC RAILING EXTENDING LESS THAN FULL APPROACH SLAB LENGTH IN WIDE MEDIANS WITH FLUSH SHOULDERS

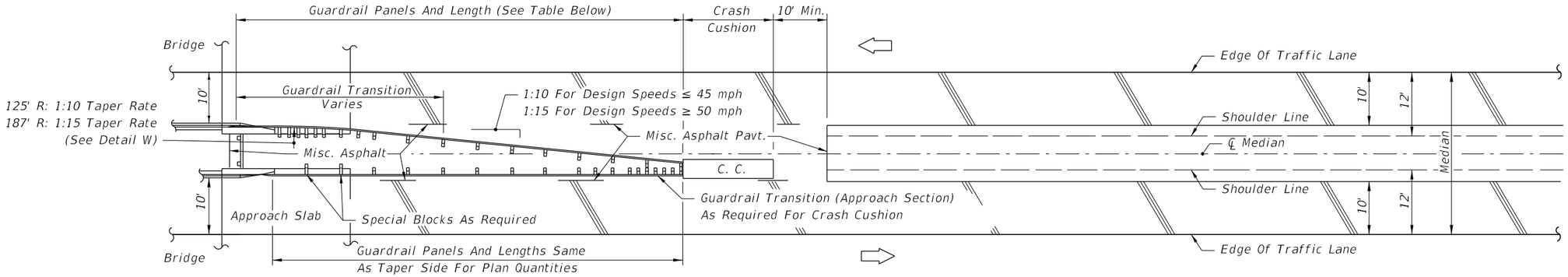

MEDIANS WITH 10' BRIDGE SHOULDERS

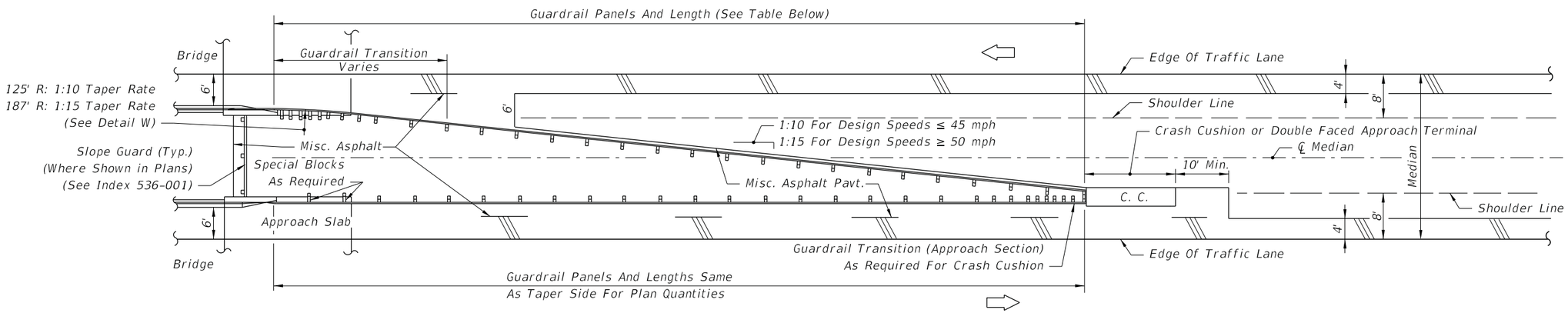

MEDIANS WITH 6' BRIDGE SHOULDERS

Note: The guardrail configurations shown apply only to parallel or near parallel bridges with open medians.

GUARDRAIL LENGTHS

MEDIAN WIDTH (Ft.)	6' BRIDGE SHOULDERS				10' BRIDGE SHOULDERS			
	1:10 TAPER RATE		1:15 TAPER RATE		1:10 TAPER RATE		1:15 TAPER RATE	
	PANELS (No.)	LENGTH (Ft.)	PANELS (No.)	LENGTH (Ft.)	PANELS (No.)	LENGTH (Ft.)	PANELS (No.)	LENGTH (Ft.)
30	12.5	156.25	18.5	231.25	6.5	81.25	9.5	118.75
28	11.5	143.75	16.5	206.25	5.5	68.75	7.5	93.75
26	9.5	118.75	14.5	181.25	5.5*	68.75	5.5*	68.75
24	8.5	106.25	11.5	143.75	5.5*	68.75	5.5*	68.75

The lengths shown in this table are based on standard widths for roadway and bridge median shoulders. Length requirements for both standard width and narrow bridge shoulders and end anchorage or end shielding requirements shall be determined on a site specific basis. The number of panels may be reduced when installing a crash cushion more than 2.5' in width; see * below.

*Number shown is the minimum number of panels plus a W-Thrie beam transition panel; single faced guardrail must have a length of five (5) or more panels.

APPROACH GUARDRAIL TREATMENTS FOR BRIDGES WITH CONCRETE TRAFFIC RAILING EXTENDING LESS THAN FULL APPROACH SLAB LENGTH IN NARROW MEDIANS WITH FLUSH SHOULDERS

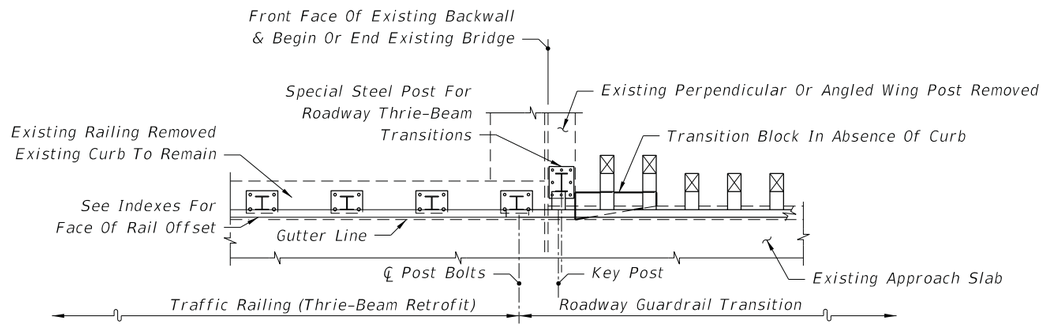

SEE INDEX 460-471 - SCHEME 1

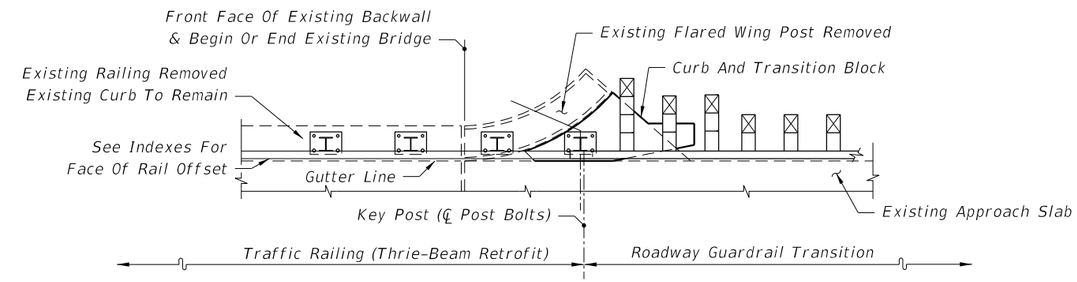

SEE INDEX 460-471 - SCHEME 3

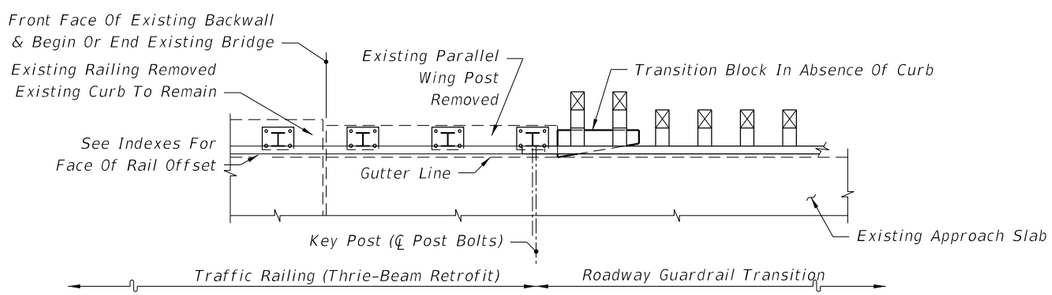

SEE INDEX 460-471 - SCHEME 2

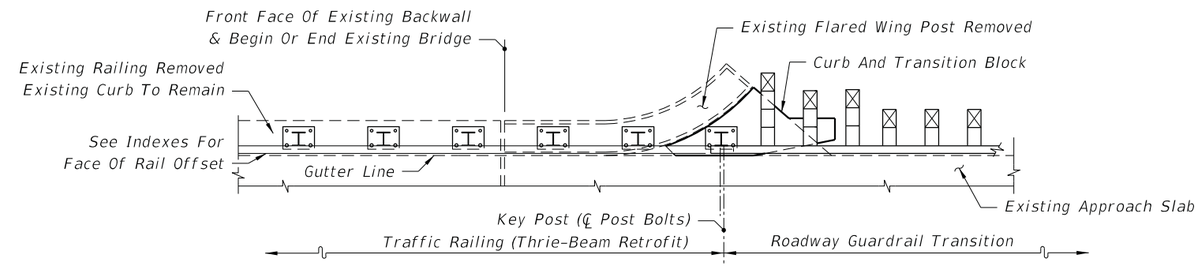

SEE INDEX 460-471 - SCHEME 3

PARTIAL PLAN VIEWS OF GUARDRAIL APPROACH TRANSITIONS AND CONNECTIONS
FOR BRIDGE TRAFFIC RAILING (THRIE-BEAM RETROFIT)

10/6/2022 2:18:11 PM

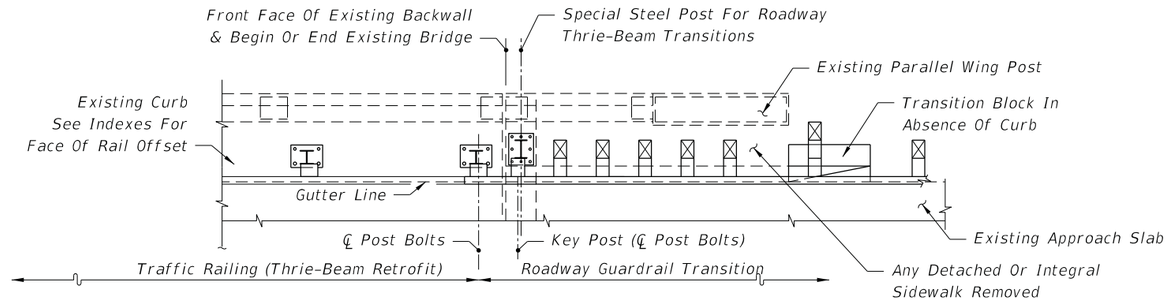

SEE INDEXES 460-472 & 460-475 - SCHEME 2

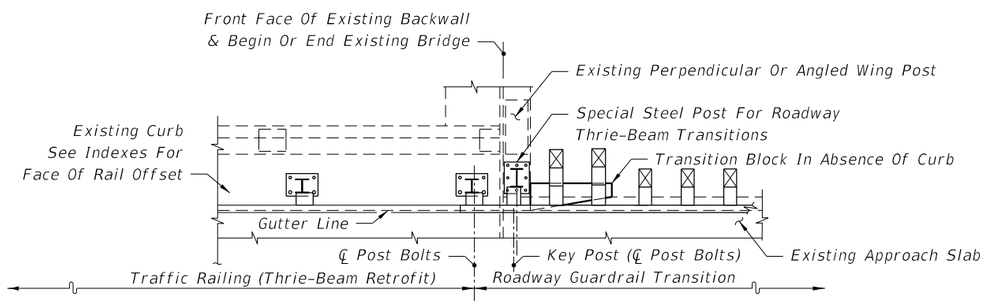

SEE INDEXES 460-472 & 460-475 - SCHEME 1

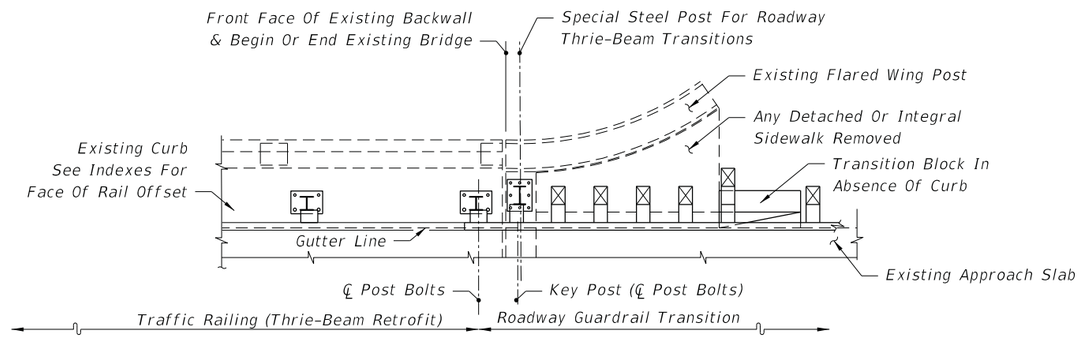

SEE INDEXES 460-472 & 460-475 - SCHEME 2

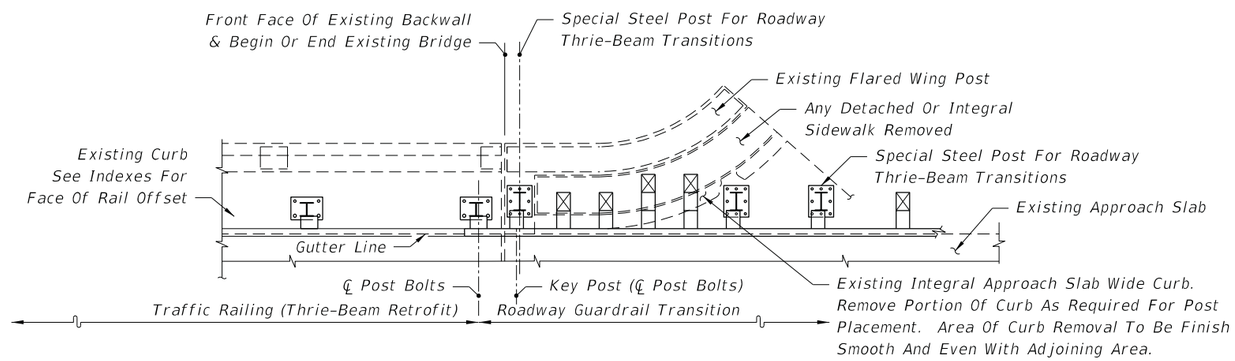

SEE INDEXES 460-472 & 460-475 - SCHEME 2

PARTIAL PLAN VIEWS OF GUARDRAIL APPROACH TRANSITIONS AND CONNECTIONS FOR BRIDGE TRAFFIC RAILING (THRIE-BEAM RETROFIT)

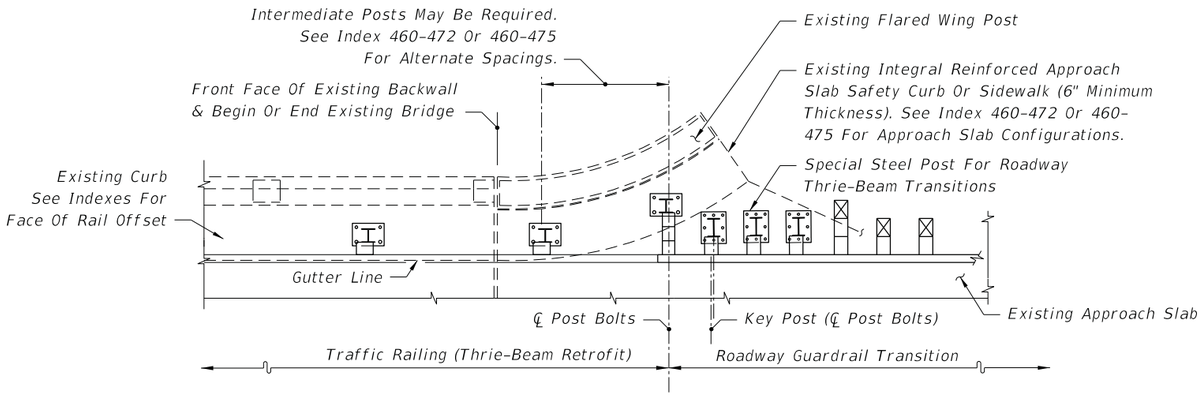

SEE INDEXES 460-472 & 460-475 - SCHEMES 3 & 4

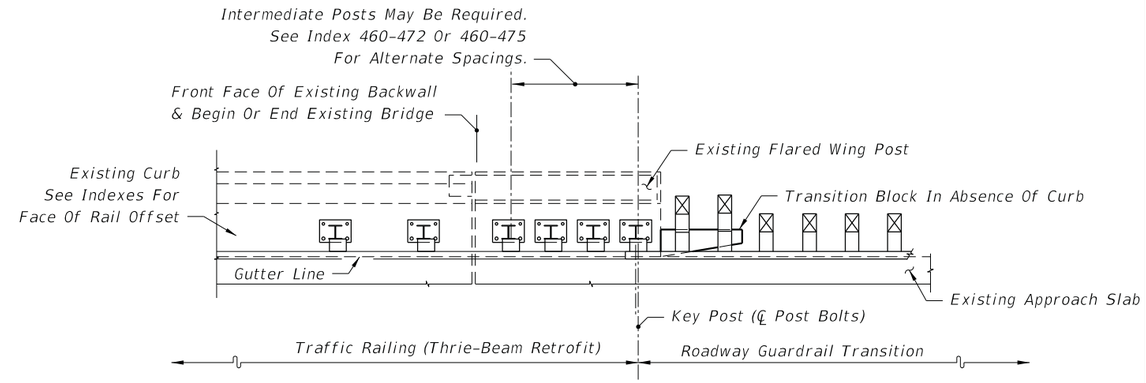

SEE INDEXES 460-472 & 460-475 - SCHEMES 5 & 6

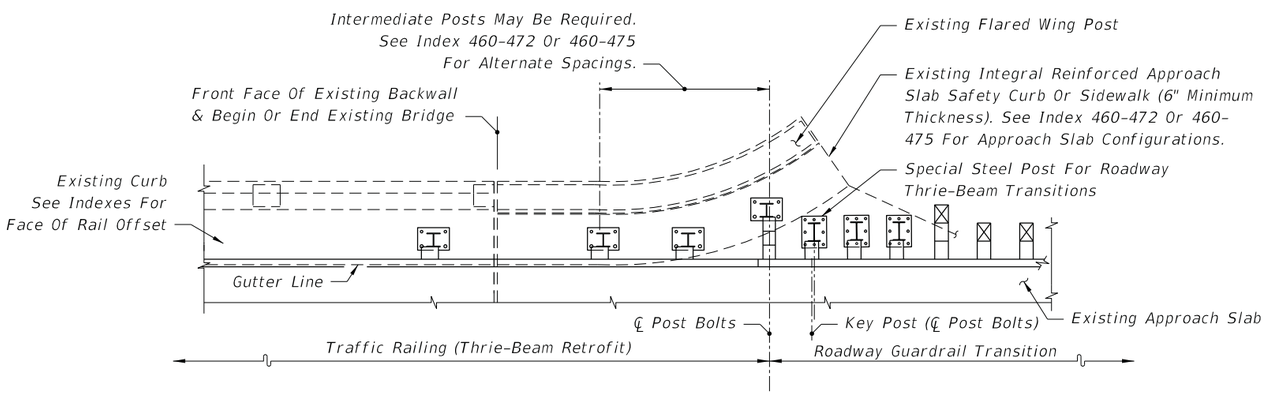

SEE INDEXES 460-472 & 460-475 - SCHEMES 3 & 4

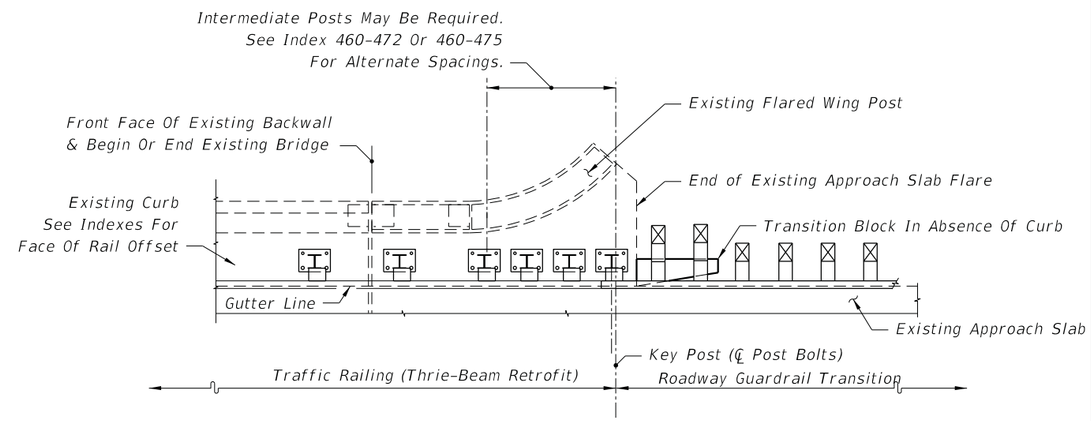

SEE INDEXES 460-472 & 460-475 - SCHEMES 5 & 6

PARTIAL PLAN VIEWS OF GUARDRAIL APPROACH TRANSITIONS AND CONNECTIONS
FOR BRIDGE TRAFFIC RAILING (THRIE-BEAM RETROFIT)

10/6/2022 2:18:12 PM

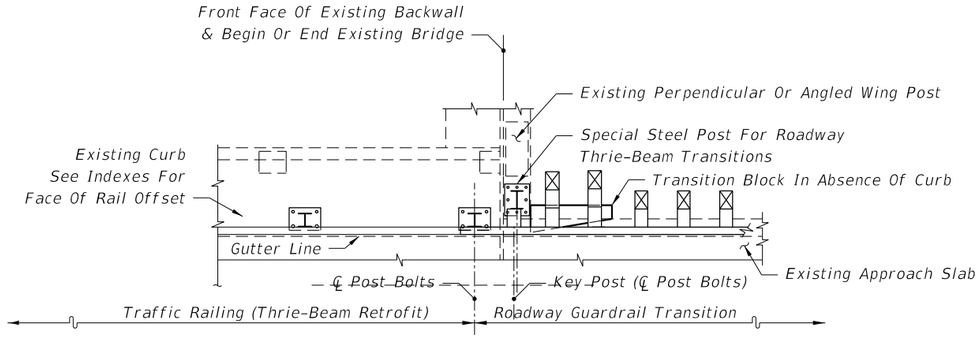

SEE INDEXES 460-473 & 460-476 - SCHEME 1

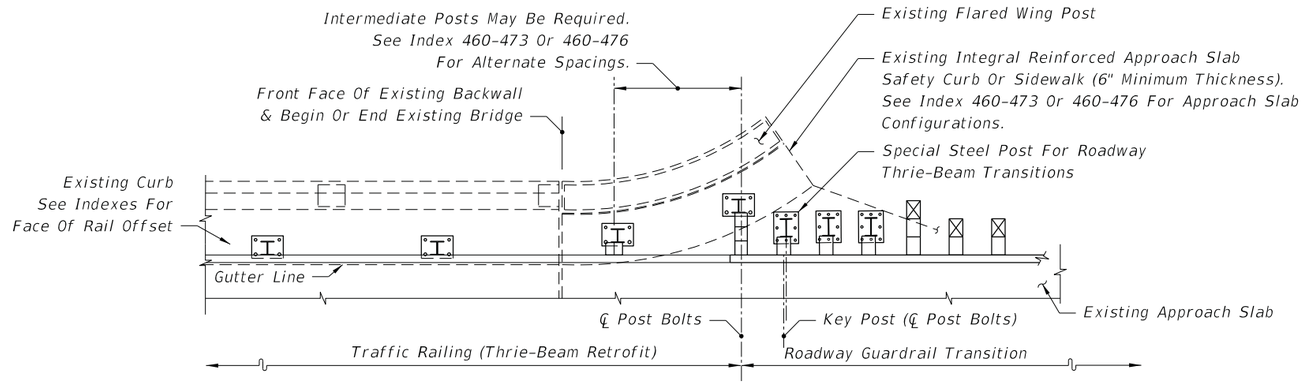

SEE INDEXES 460-473 & 460-476 - SCHEMES 3 & 4

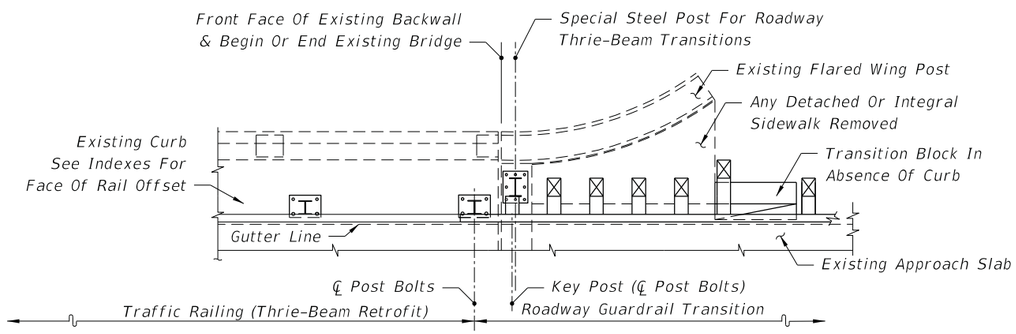

SEE INDEXES 460-473 & 460-476 - SCHEME 2

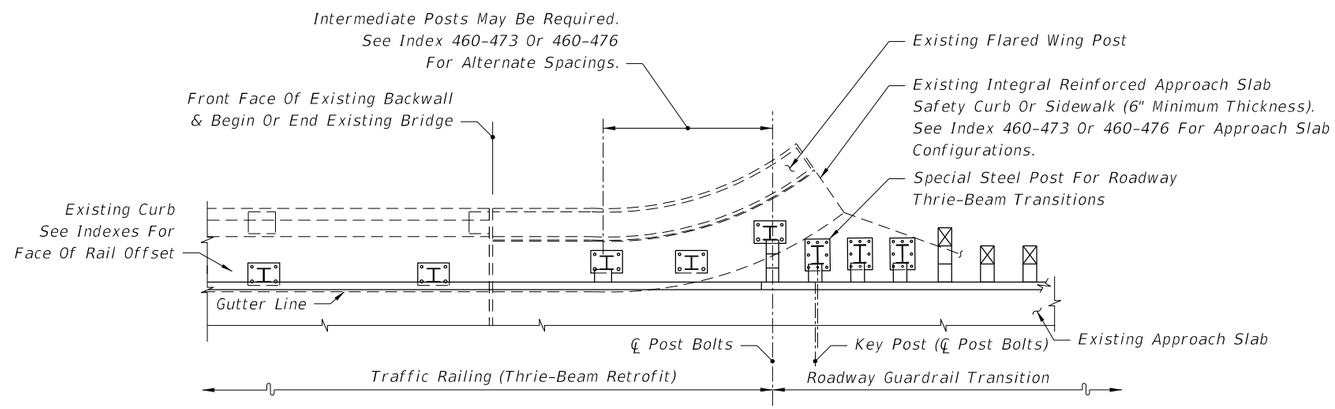

SEE INDEXES 460-473 & 460-476 - SCHEMES 3 & 4

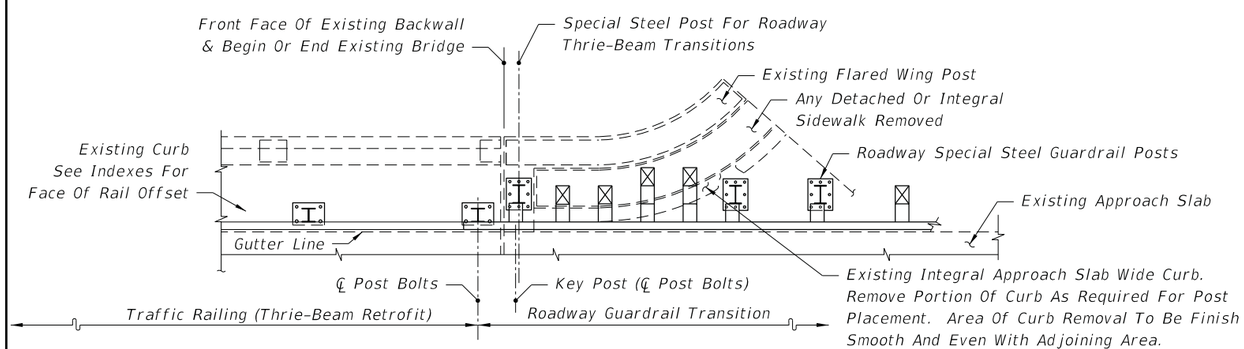

SEE INDEXES 460-473 & 460-476 - SCHEME 2

PARTIAL PLAN VIEWS OF GUARDRAIL APPROACH TRANSITIONS AND CONNECTIONS FOR BRIDGE TRAFFIC RAILING (THRIE-BEAM RETROFIT)

10/6/2022 2:18:13 PM

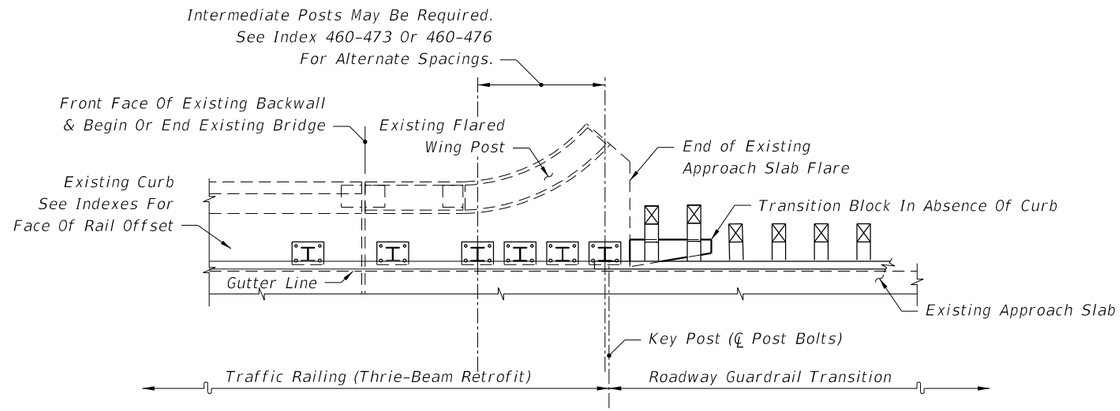

SEE INDEXES 460-473 & 460-476 - SCHEMES 5 & 6

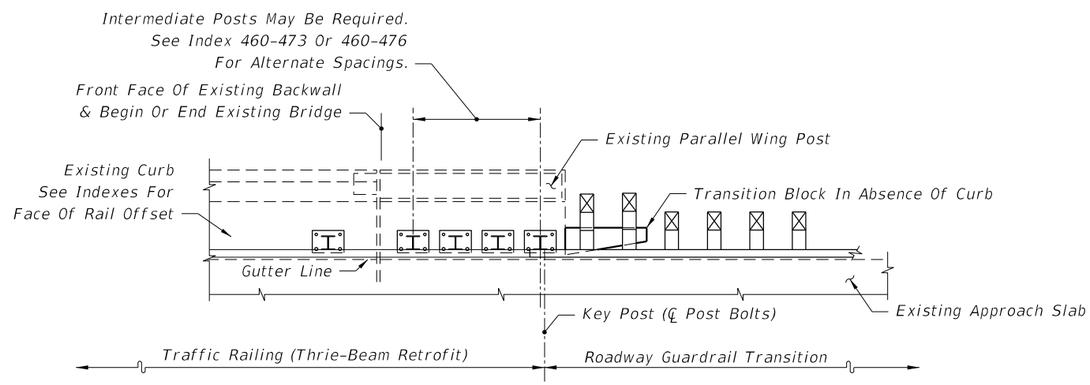

SEE INDEXES 460-473 & 460-476 - SCHEMES 5 & 6

PARTIAL PLAN VIEWS OF GUARDRAIL APPROACH TRANSITIONS AND CONNECTIONS
FOR BRIDGE TRAFFIC RAILING (THRIE-BEAM RETROFIT)

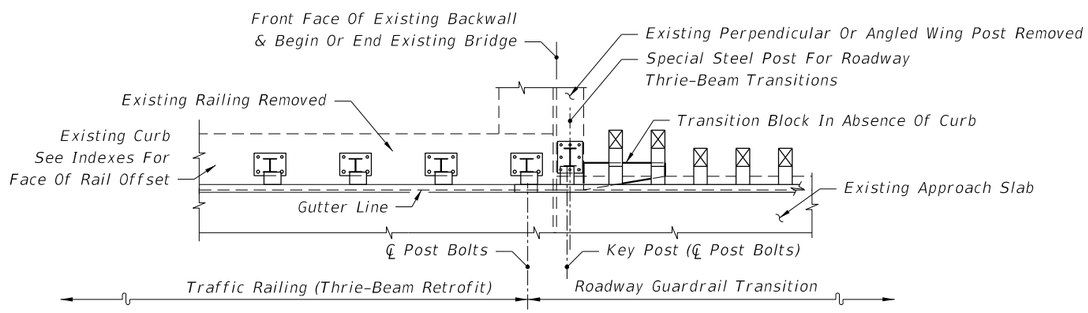

SEE INDEX 460-474 - SCHEME 1

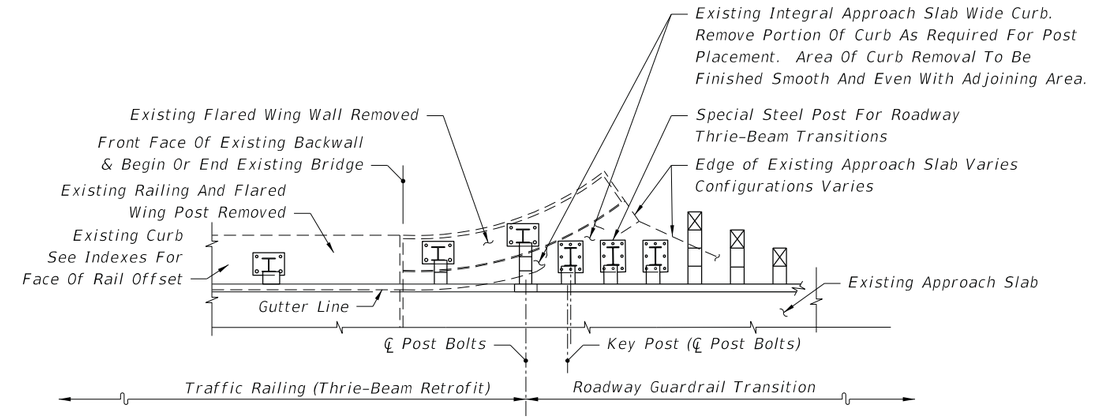

SEE INDEX 460-474 - SCHEME 3

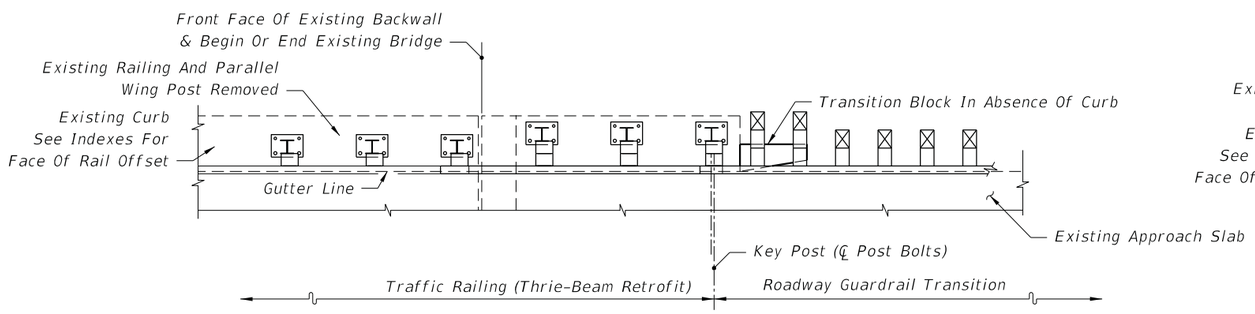

SEE INDEX 460-474 - SCHEME 2

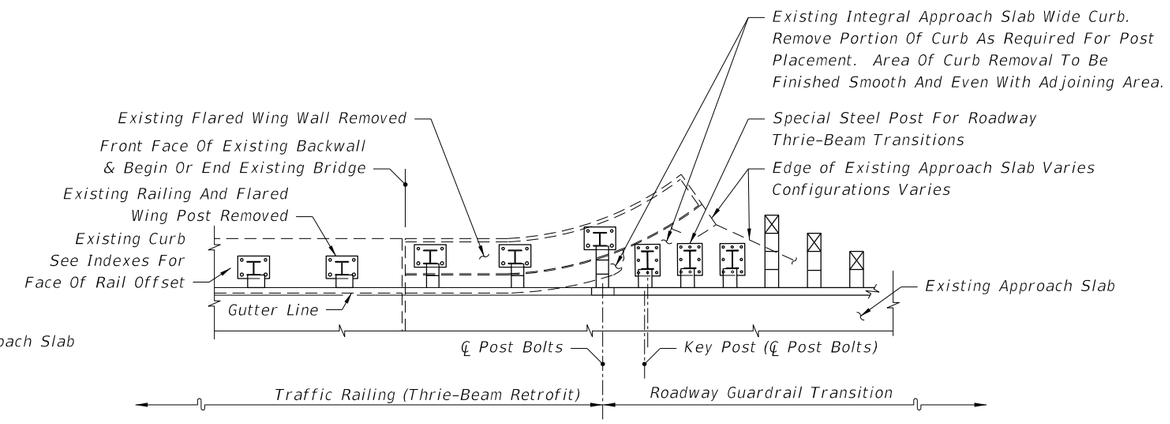

SEE INDEX 460-474 - SCHEME 3

PARTIAL PLAN VIEWS OF GUARDRAIL APPROACH TRANSITIONS AND CONNECTIONS
FOR BRIDGE TRAFFIC RAILING (THRIE-BEAM RETROFIT)

10/6/2022 2:18:14 PM

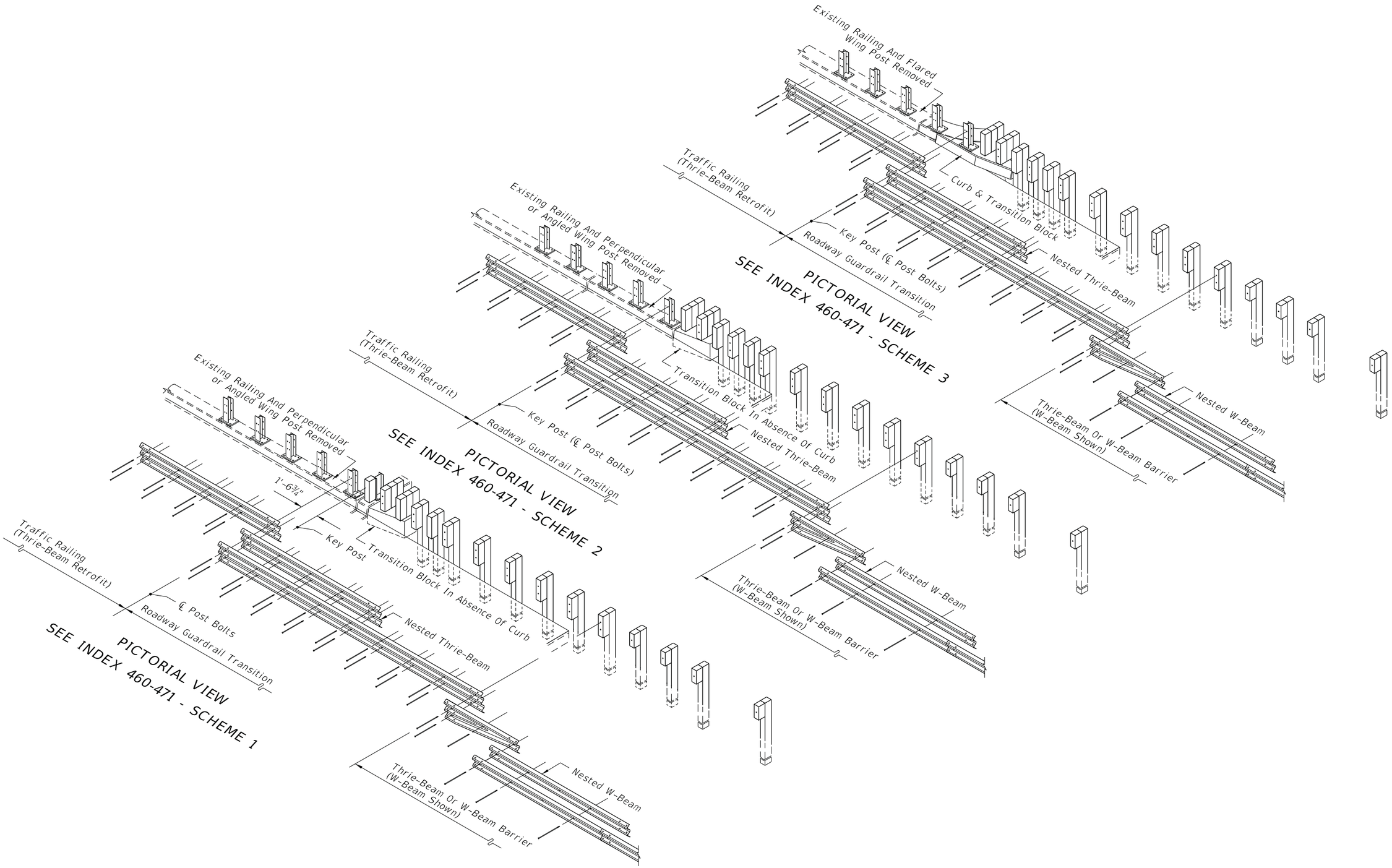

PICTORIAL VIEWS OF GUARDRAIL APPROACH TRANSITIONS AND CONNECTIONS FOR BRIDGE TRAFFIC RAILING (THRIE-BEAM RETROFIT)

10/6/2022 2:18:15 PM

LAST REVISION	REVISION	DESCRIPTION:				INDEX	SHEET
11/01/19			FDOT	FY 2023-24 STANDARD PLANS	GUARDRAIL TRANSITIONS AND CONNECTIONS FOR EXISTING BRIDGES	536-002	11 of 28

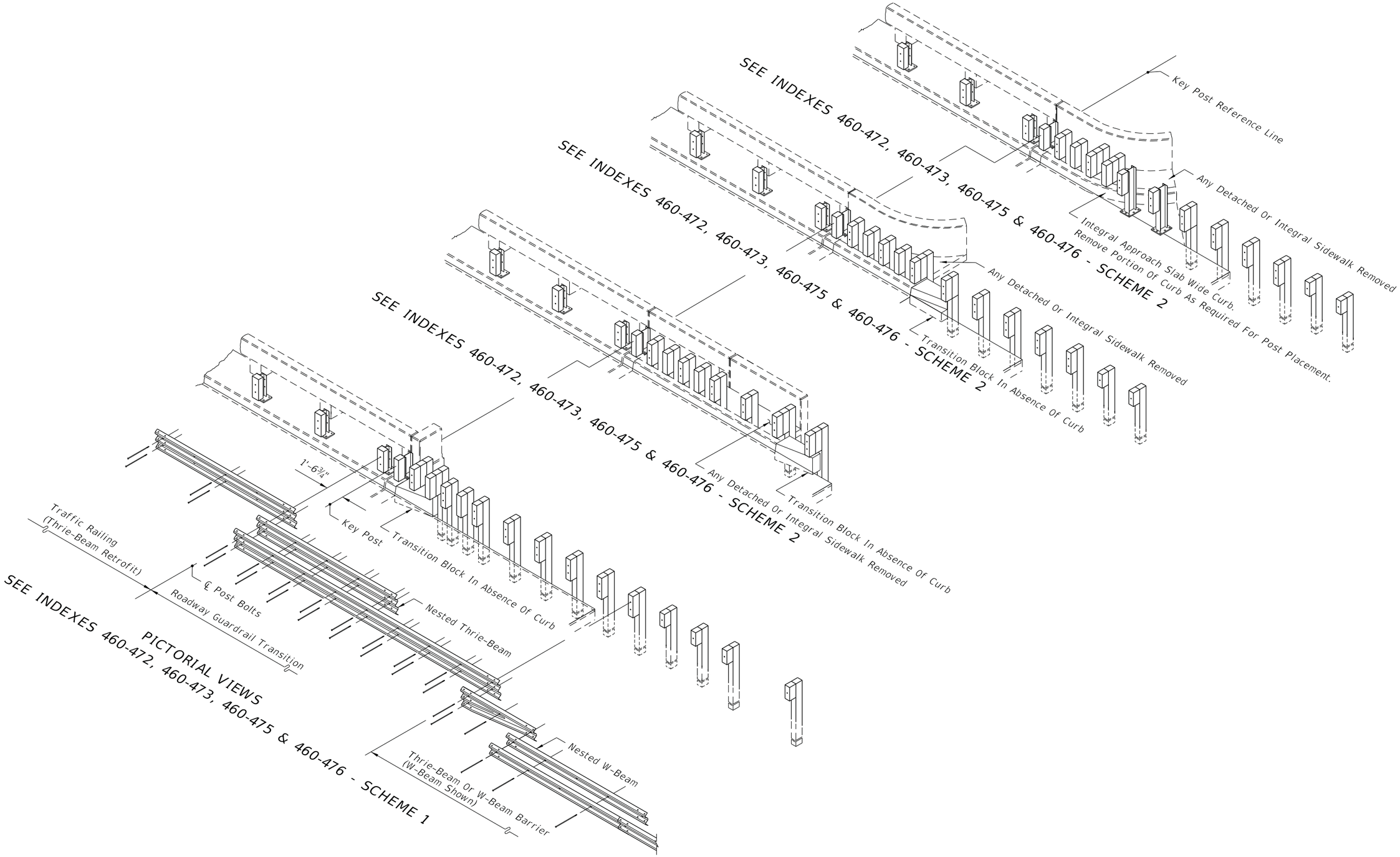

PICTORIAL VIEWS OF GUARDRAIL APPROACH TRANSITIONS AND CONNECTIONS FOR BRIDGE TRAFFIC RAILING (THRIE-BEAM RETROFIT)

10/6/2022 2:18:16 PM

LAST REVISION	REVISION	DESCRIPTION:			INDEX	SHEET
11/01/19			FY 2023-24 STANDARD PLANS	GUARDRAIL TRANSITIONS AND CONNECTIONS FOR EXISTING BRIDGES	536-002	12 of 28

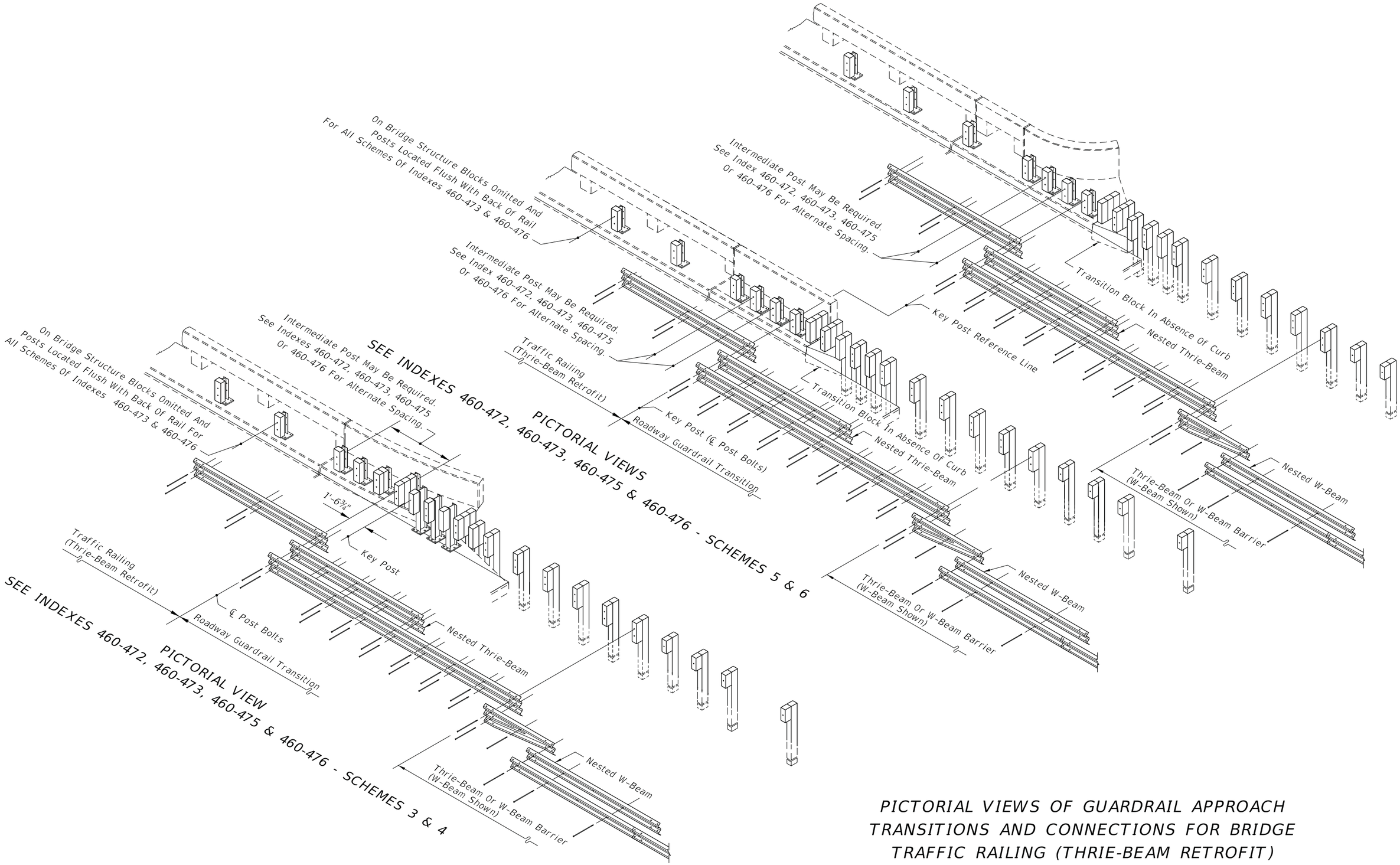

PICTORIAL VIEWS OF GUARDRAIL APPROACH TRANSITIONS AND CONNECTIONS FOR BRIDGE TRAFFIC RAILING (THRIE-BEAM RETROFIT)

10/6/2022 2:18:17 PM

LAST REVISION	REVISION	DESCRIPTION:				INDEX	SHEET
11/01/19			FDOT	FY 2023-24 STANDARD PLANS	GUARDRAIL TRANSITIONS AND CONNECTIONS FOR EXISTING BRIDGES	536-002	13 of 28

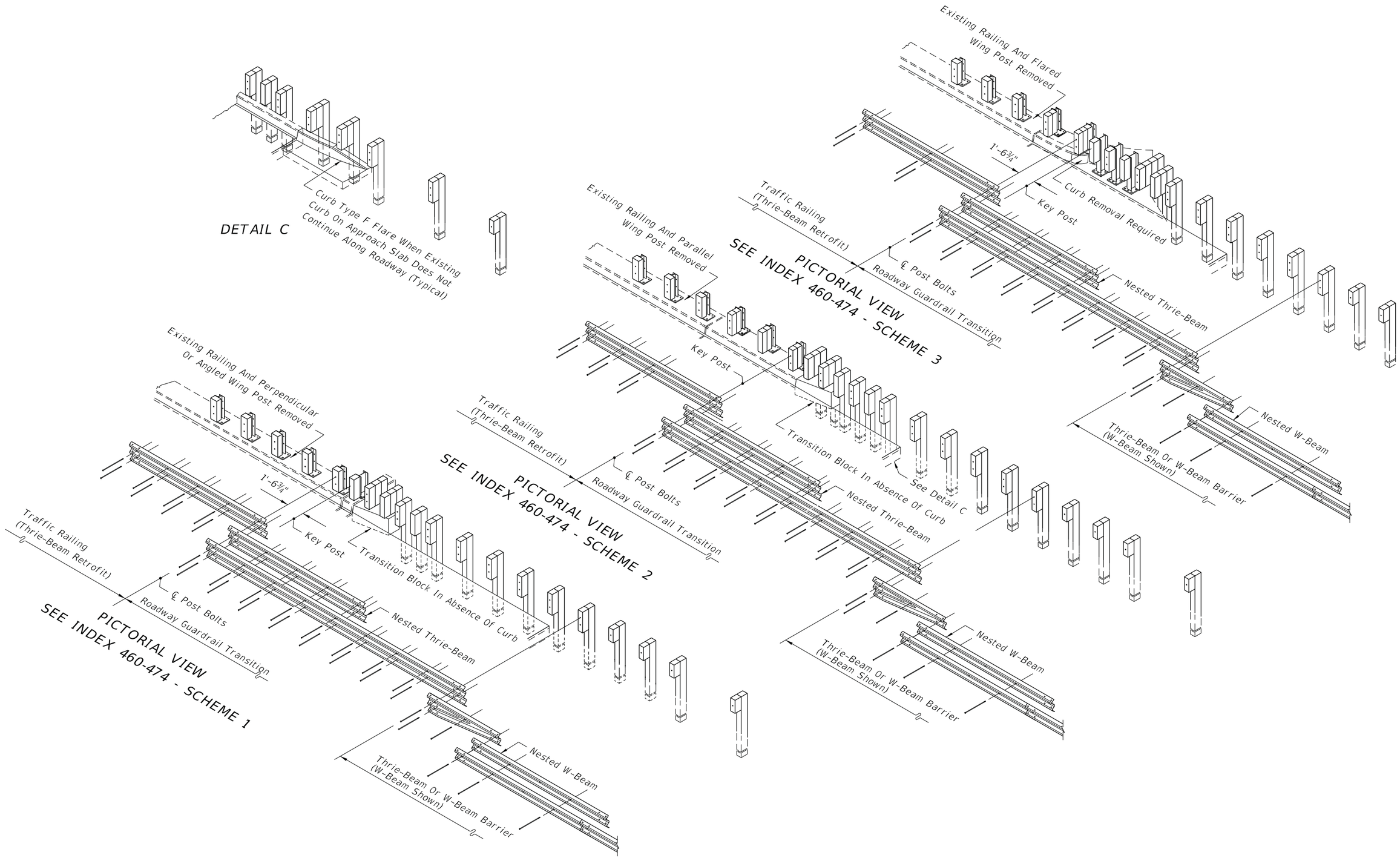

PICTORIAL VIEWS OF GUARDRAIL APPROACH TRANSITIONS AND CONNECTIONS FOR BRIDGE TRAFFIC RAILING (THRIE-BEAM RETROFIT)

LAST REVISION	REVISION	DESCRIPTION:			INDEX	SHEET
11/01/19			FY 2023-24 STANDARD PLANS	GUARDRAIL TRANSITIONS AND CONNECTIONS FOR EXISTING BRIDGES	536-002	14 of 28

10/6/2022 2:18:17 PM

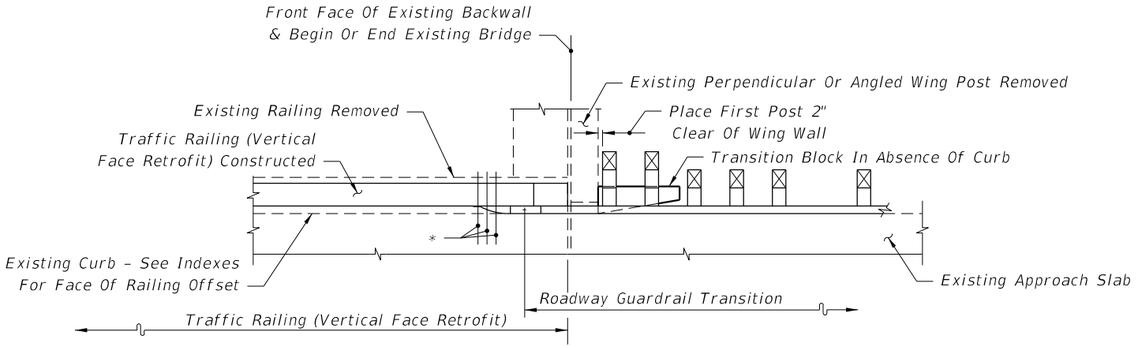

SEE INDEX 521-481 - SCHEME 1

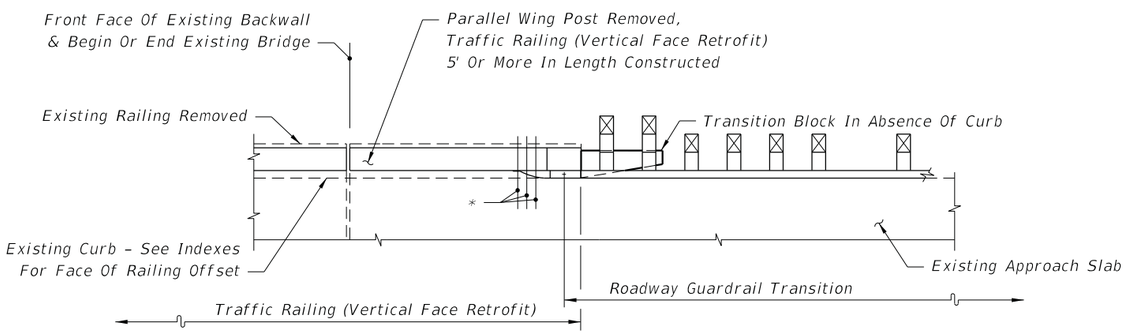

SEE INDEX 521-481 - SCHEME 2

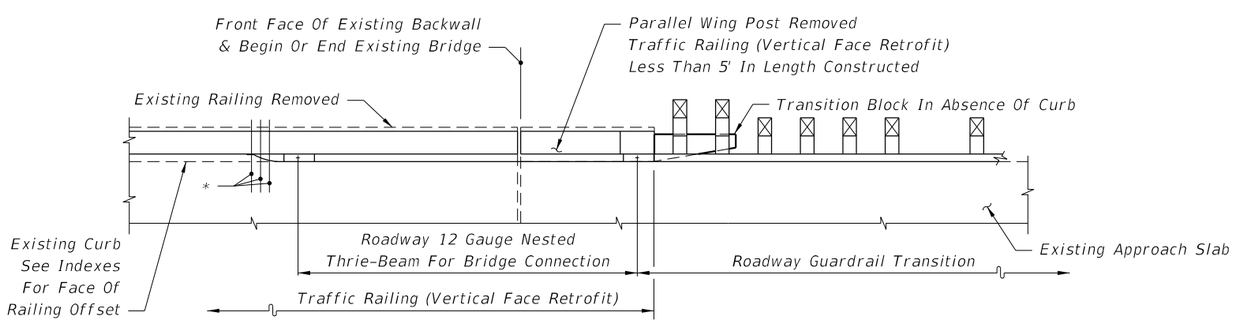

SEE INDEX 521-481 - SCHEME 2

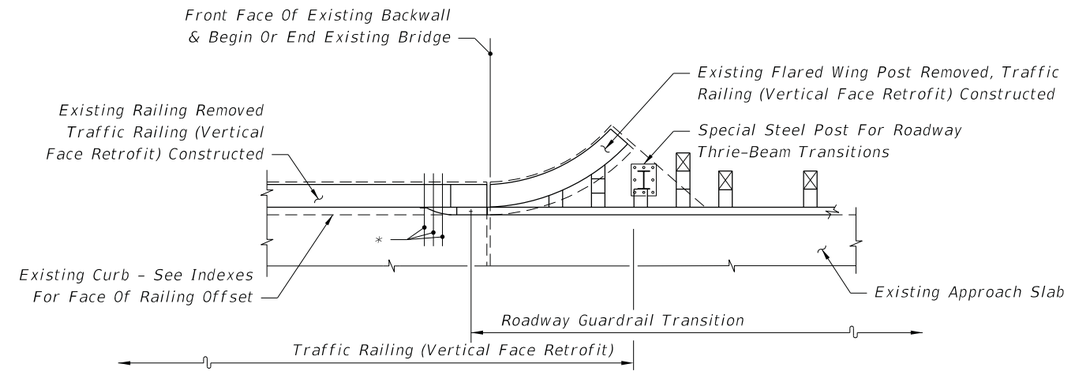

SEE INDEX 521-481 - SCHEME 3

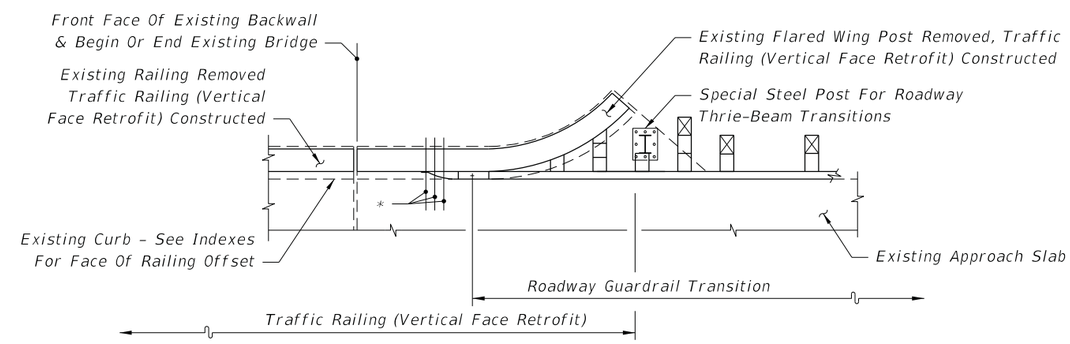

SEE INDEX 521-481 - SCHEME 3

Note:
* 21"x 12" x 5/8" Thrie-Beam Terminal Connector Plate (Back-Up Plate), And 7/8"Ø x 12" Long HS Hex Bolts And Nuts (5 Reqd.) With 2¼" OD Plain Round Washers Under Heads And Nuts

PARTIAL PLAN VIEWS OF TRAFFIC RAILING (VERTICAL FACE RETROFIT)

10/6/2022 2:18:18 PM

LAST REVISION	REVISION	DESCRIPTION:			INDEX	SHEET
11/01/19			FY 2023-24 STANDARD PLANS	GUARDRAIL TRANSITIONS AND CONNECTIONS FOR EXISTING BRIDGES	536-002	15 of 28

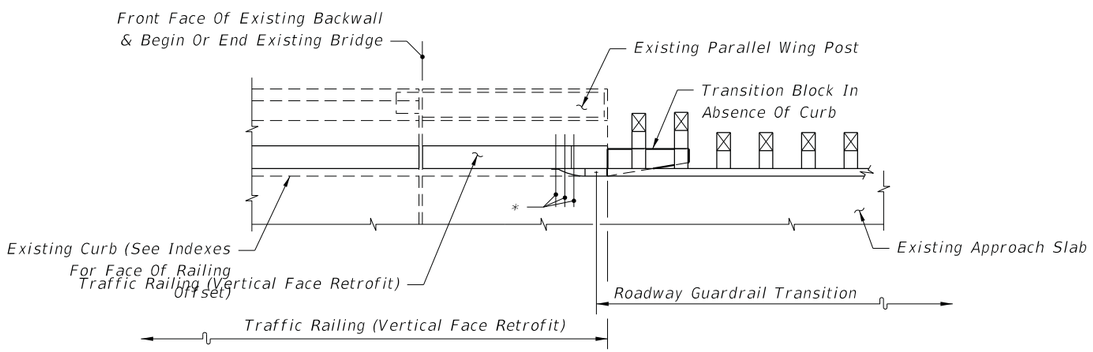

SEE INDEX 521-405 OR 521-482 - SCHEME 2

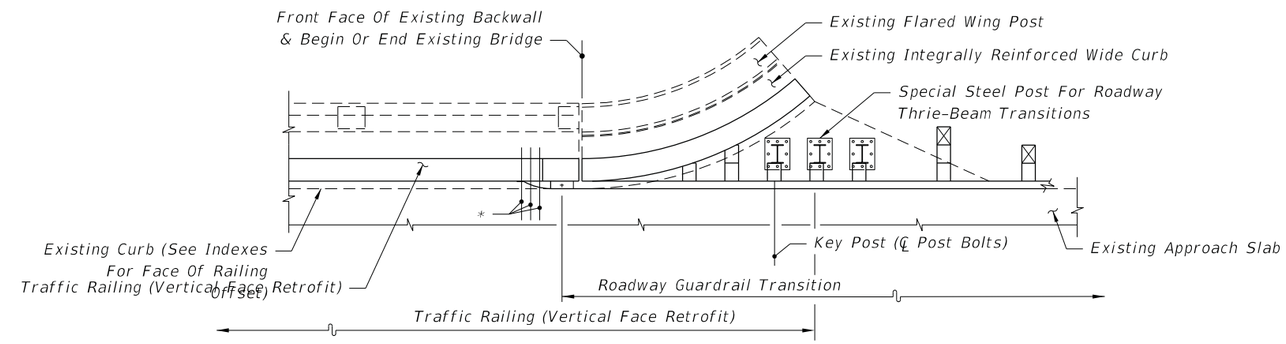

SEE INDEX 521-405 OR 521-482 - SCHEME 3

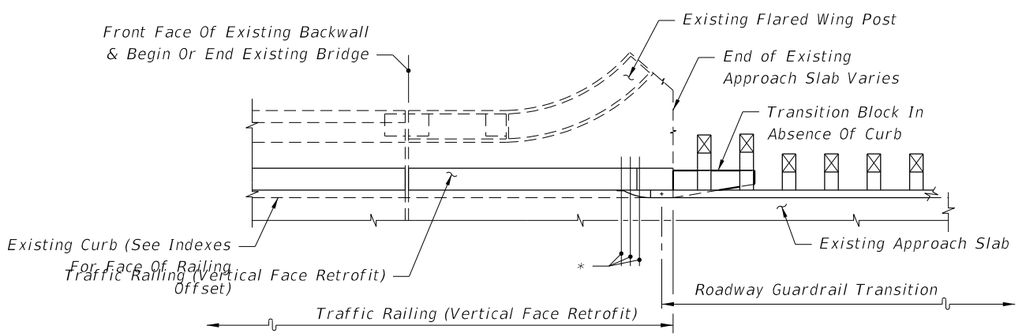

SEE INDEX 521-405 OR 521-482 - SCHEME 2

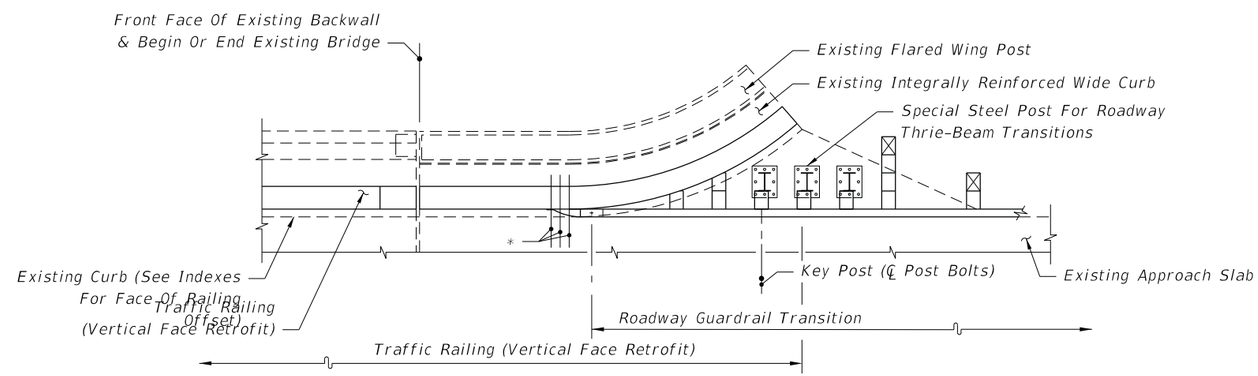

SEE INDEX 521-405 OR 521-482 - SCHEME 3

Note:
* 21" x 12" x 5/8" Thrie-Beam Terminal Connector Plate (Back-Up Plate), And 7/8"Ø x 12" Long HS Hex Bolts And Nuts (5 Reqd.) With 2¼" OD Plain Round Washers Under Heads And Nuts

PARTIAL PLAN VIEWS OF TRAFFIC RAILING (VERTICAL FACE RETROFIT)
(INDEX 521-482 SHOWN, INDEX 521-405 SIMILAR)

10/6/2022 2:18:19 PM

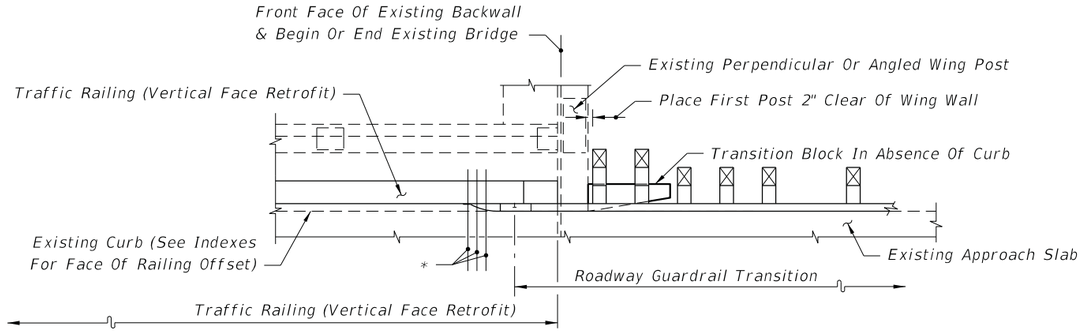

SEE INDEX 521-405 OR 521-482 - SCHEME 1

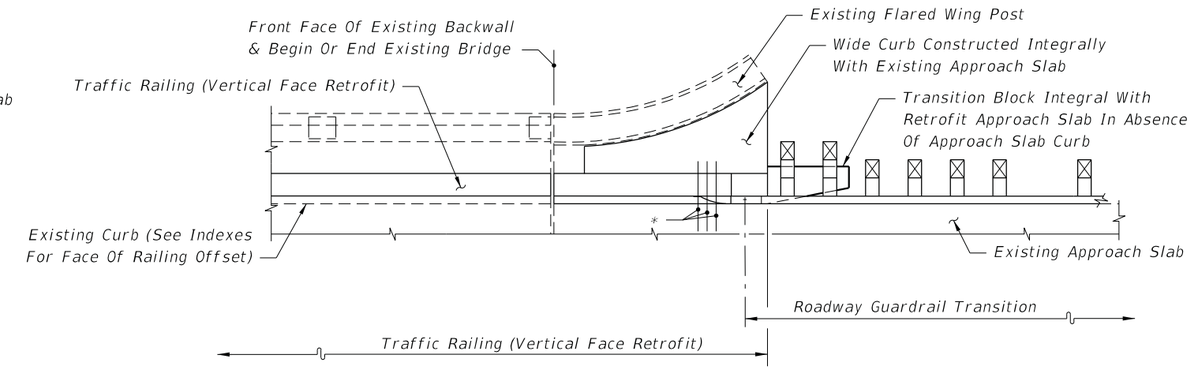

SEE INDEX 521-405 OR 521-482 - SCHEME 5

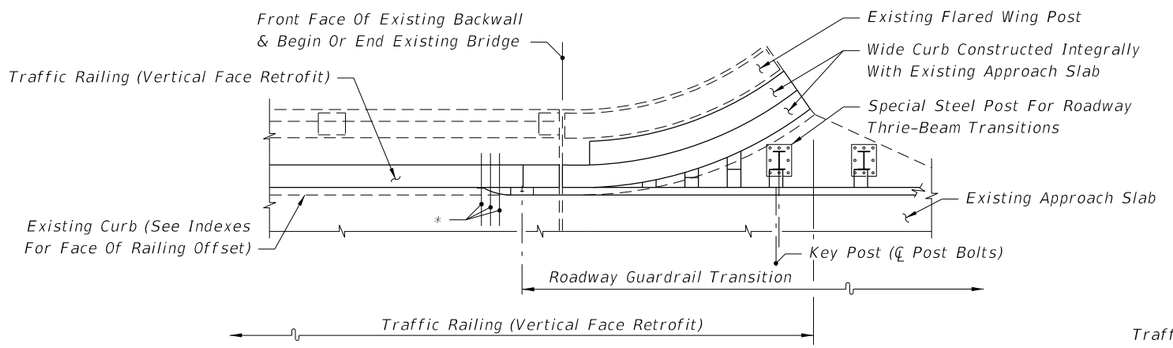

SEE INDEX 521-405 OR 521-482 - SCHEME 4

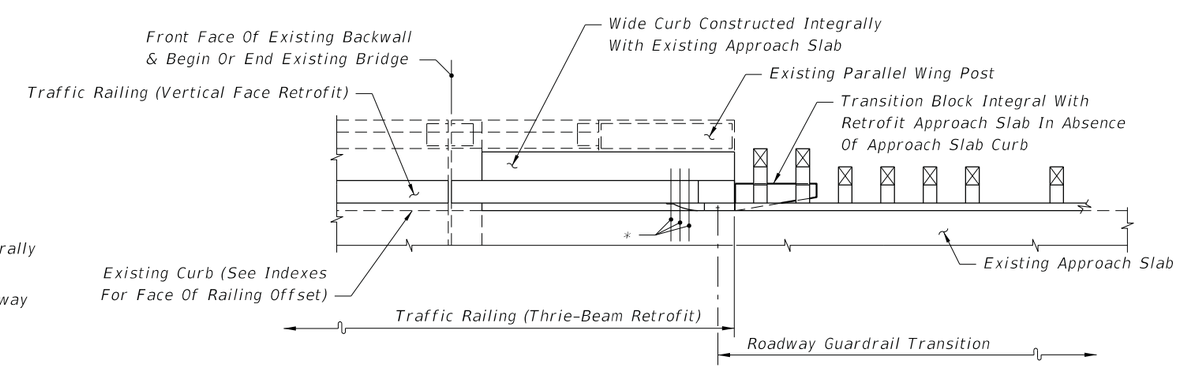

SEE INDEX 521-405 OR 521-482 - SCHEME 5

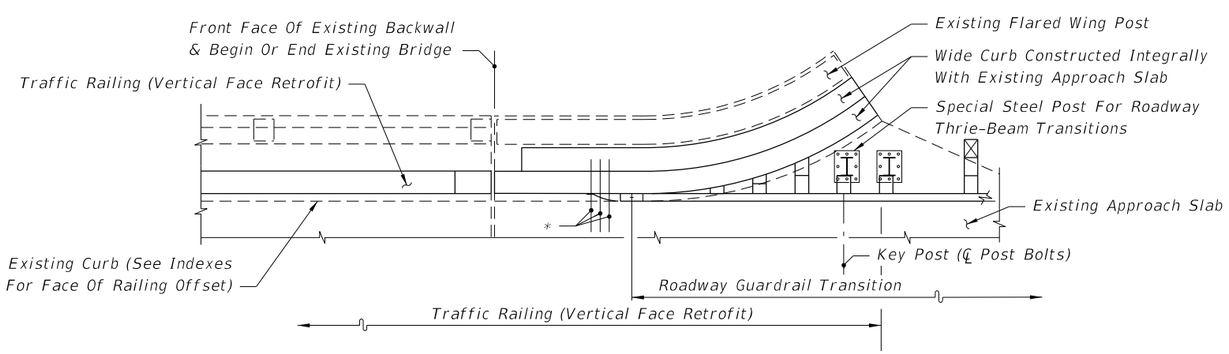

SEE INDEX 521-405 OR 521-482 - SCHEME 4

Note:
*21" x 12" x 5/8" Thrie-Beam Terminal Connector Plate (Back-Up Plate), And 7/8"Ø x 12" Long HS Hex Bolts And Nuts (5 Reqd.) With 2¼" OD Plain Round Washers Under Heads And Nuts

PARTIAL PLAN VIEWS OF TRAFFIC RAILING (VERTICAL FACE RETROFIT)
(INDEX 521-482 SHOWN, INDEX 521-405 SIMILAR)

10/6/2022 2:18:20 PM

LAST REVISION	REVISION	DESCRIPTION:			INDEX	SHEET
11/01/19			FY 2023-24 STANDARD PLANS	GUARDRAIL TRANSITIONS AND CONNECTIONS FOR EXISTING BRIDGES	536-002	17 of 28

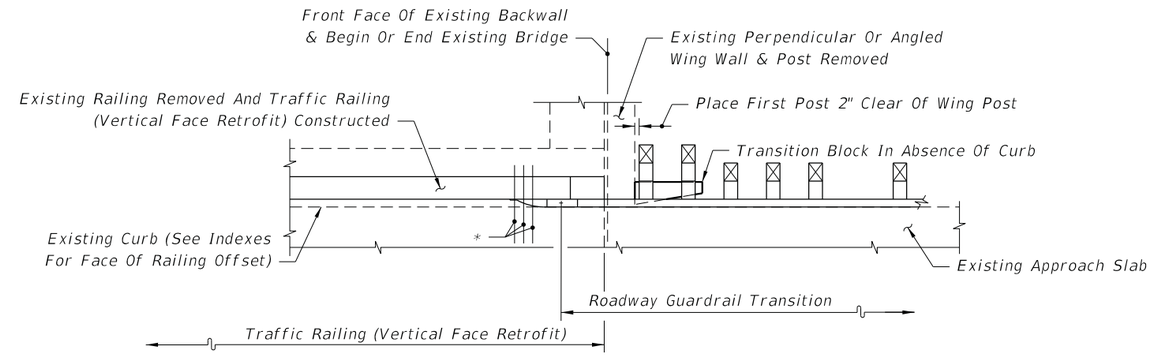

SEE INDEX 521-483 - SCHEME 1

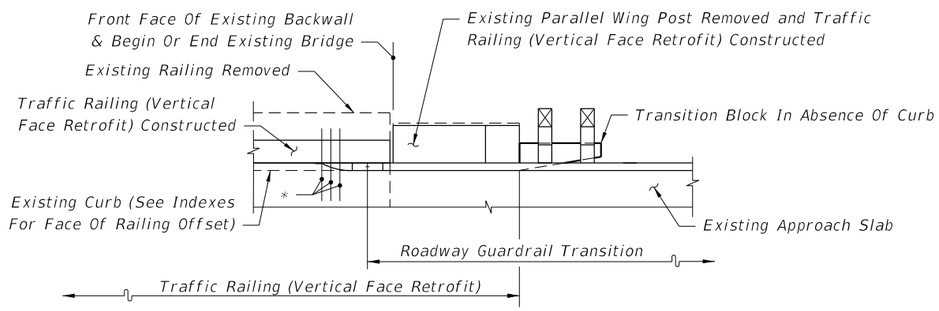

SEE INDEX 521-483 - SCHEME 2

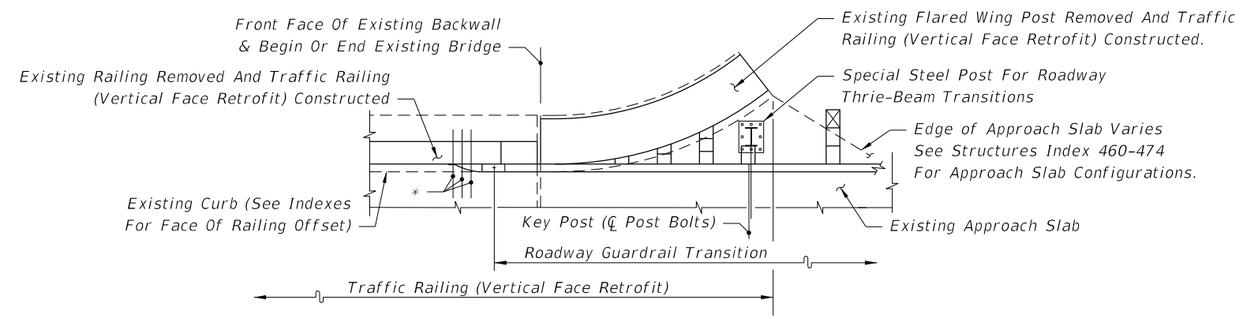

SEE INDEX 521-483 - SCHEME 3

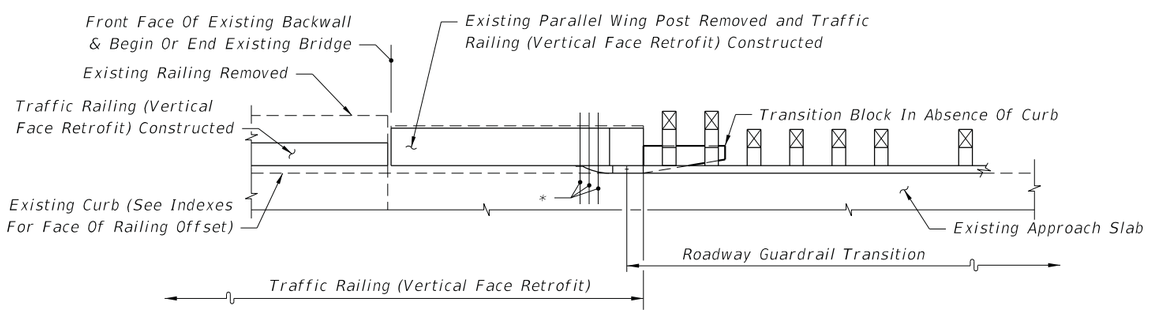

SEE INDEX 521-483 - SCHEME 2

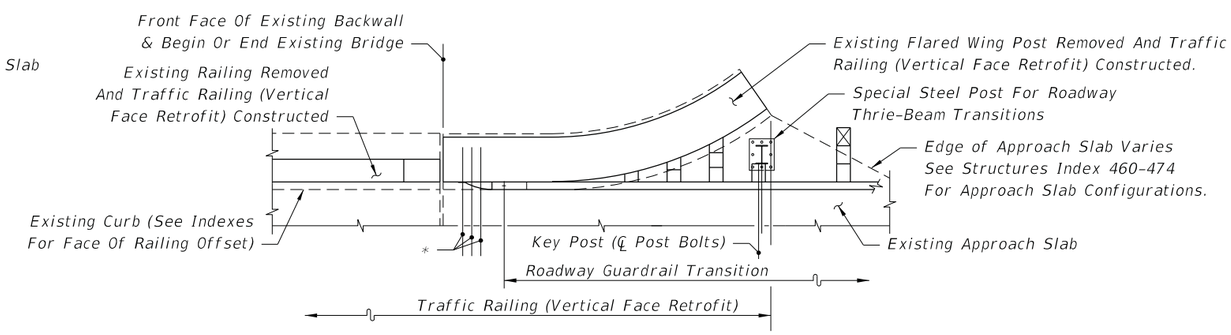

SEE INDEX 521-483 - SCHEME 3

Note:
* 21" x 12" x 5/8" Thrie-Beam Terminal Connector Plate (Back-Up Plate), And 7/8"Ø HS Hex Bolts And Nuts (12" Long For Scheme 1 And Length To Fit For Schemes 2 And 3) (5 Reqd.) With 2¼" OD Plain Round Washers Under Heads And Nuts

PARTIAL PLAN VIEWS OF TRAFFIC RAILING (VERTICAL FACE RETROFIT)

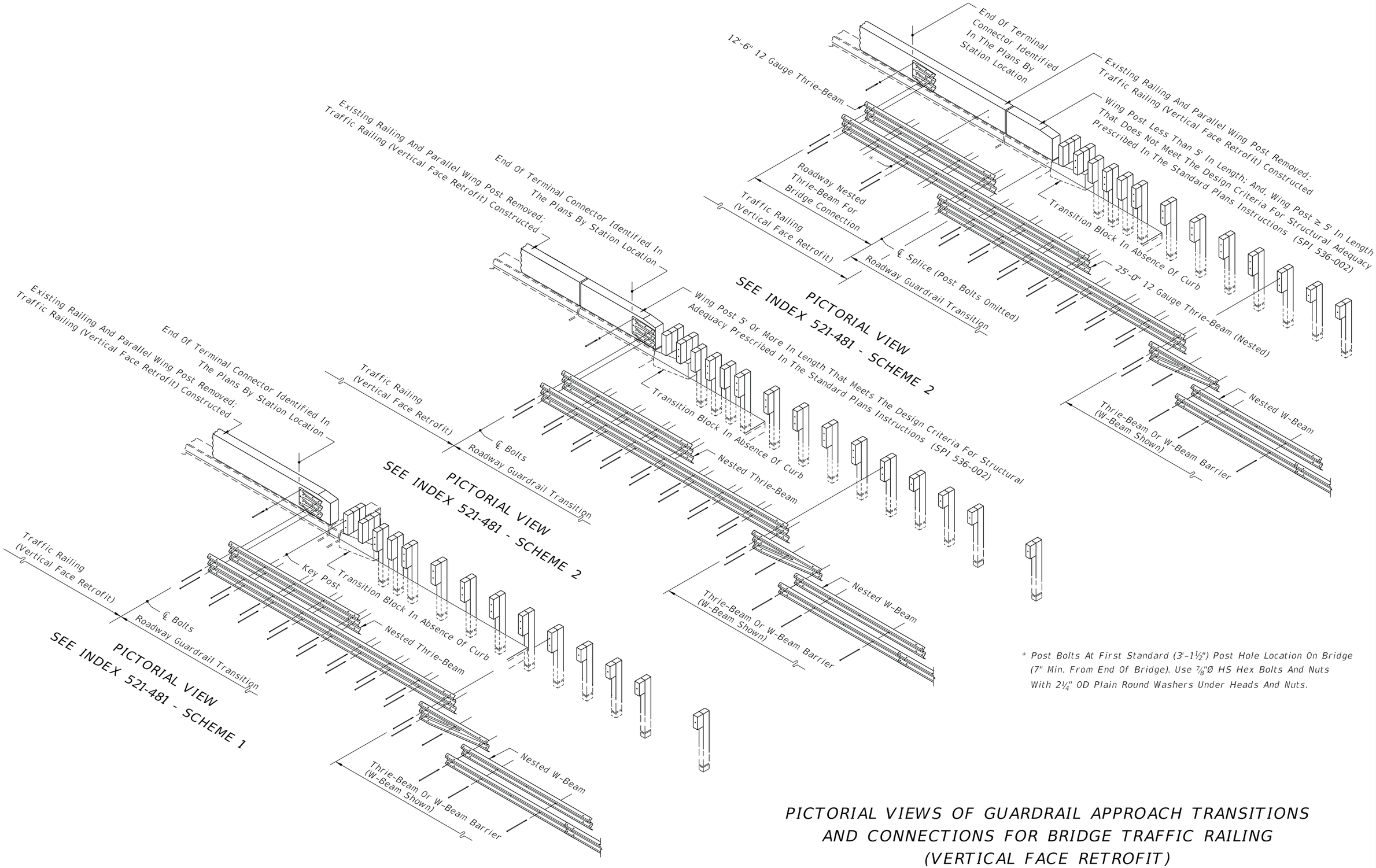

* Post Bolts At First Standard (3'-1½") Post Hole Location On Bridge (7" Min. From End Of Bridge). Use ⅞"Ø HS Hex Bolts And Nuts With 2¼" OD Plain Round Washers Under Heads And Nuts.

PICTORIAL VIEWS OF GUARDRAIL APPROACH TRANSITIONS AND CONNECTIONS FOR BRIDGE TRAFFIC RAILING (VERTICAL FACE RETROFIT)

10/6/2022 2:18:21 PM

LAST REVISION	REVISION	DESCRIPTION:	FDOT	FY 2023-24 STANDARD PLANS	GUARDRAIL TRANSITIONS AND CONNECTIONS FOR EXISTING BRIDGES	INDEX	SHEET
11/01/19						536-002	19 of 28

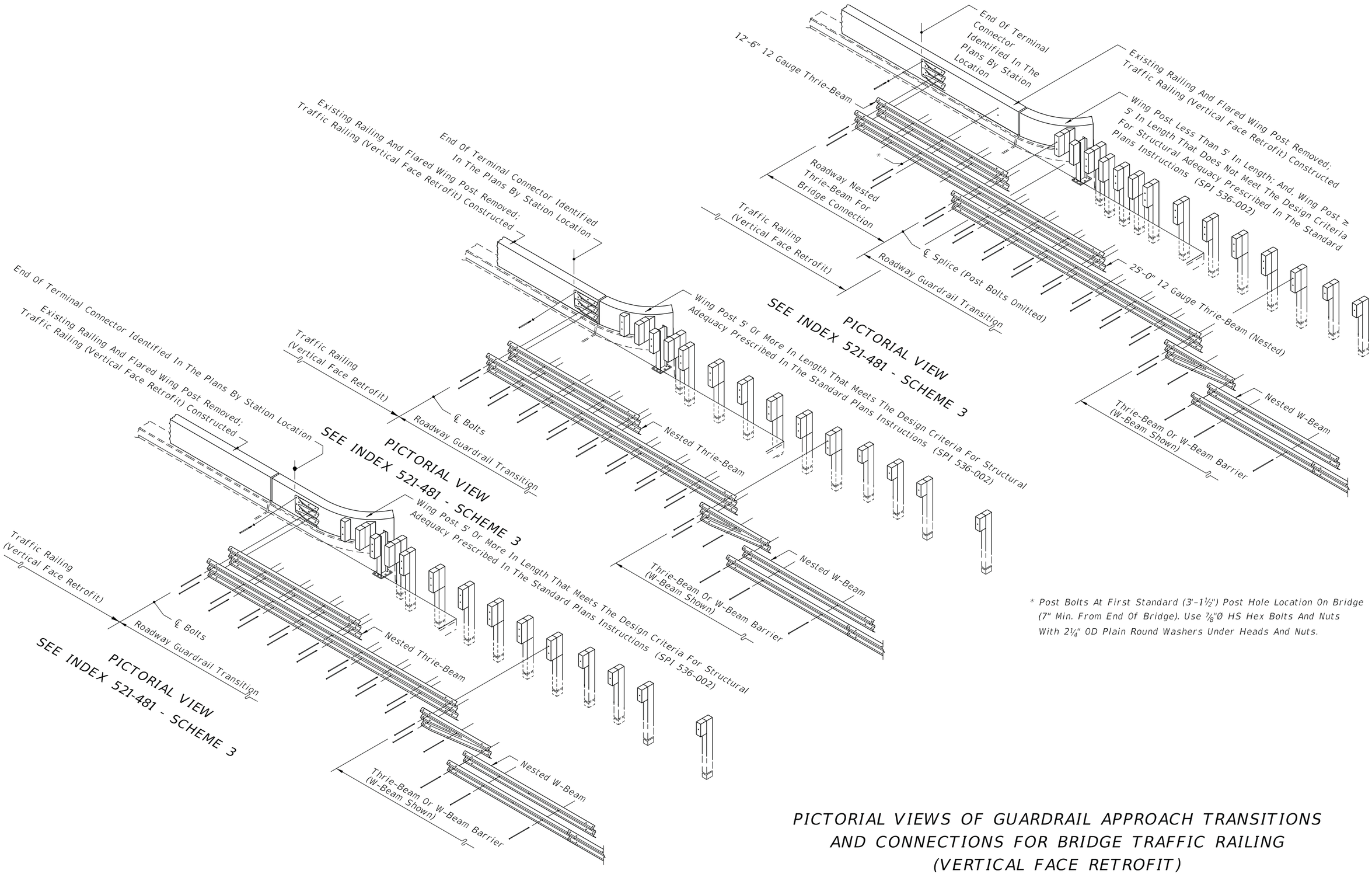

* Post Bolts At First Standard (3'-1½") Post Hole Location On Bridge (7" Min. From End Of Bridge). Use ⅞"Ø HS Hex Bolts And Nuts With 2¼" OD Plain Round Washers Under Heads And Nuts.

PICTORIAL VIEWS OF GUARDRAIL APPROACH TRANSITIONS AND CONNECTIONS FOR BRIDGE TRAFFIC RAILING (VERTICAL FACE RETROFIT)

10/6/2022 2:18:22 PM

LAST REVISION	REVISION	DESCRIPTION:			INDEX	SHEET
11/01/19			FY 2023-24 STANDARD PLANS	GUARDRAIL TRANSITIONS AND CONNECTIONS FOR EXISTING BRIDGES	536-002	20 of 28

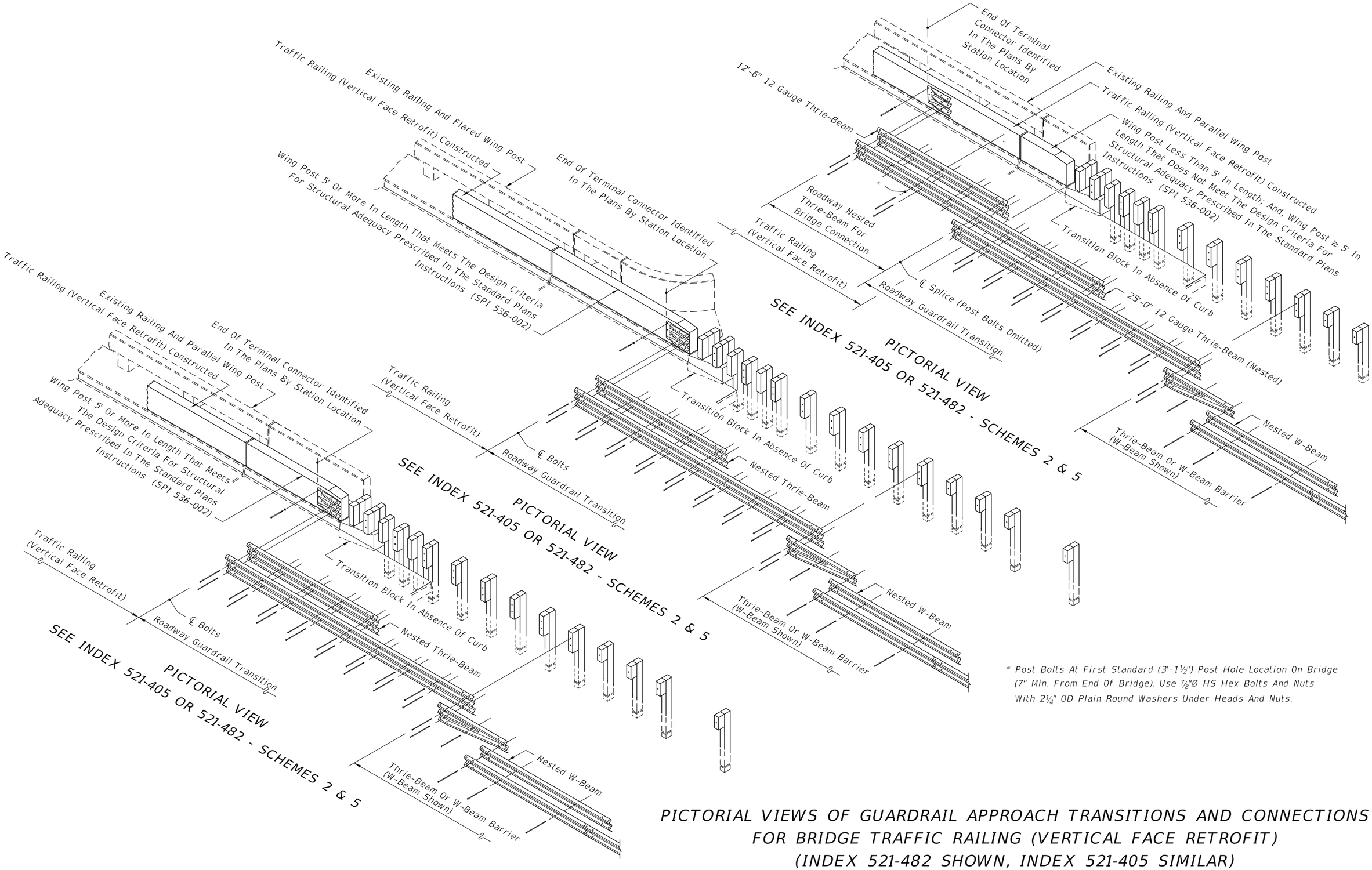

* Post Bolts At First Standard (3'-1½") Post Hole Location On Bridge (7" Min. From End Of Bridge). Use ⅞"Ø HS Hex Bolts And Nuts With 2¼" OD Plain Round Washers Under Heads And Nuts.

PICTORIAL VIEWS OF GUARDRAIL APPROACH TRANSITIONS AND CONNECTIONS FOR BRIDGE TRAFFIC RAILING (VERTICAL FACE RETROFIT) (INDEX 521-482 SHOWN, INDEX 521-405 SIMILAR)

10/6/2022 2:18:23 PM

LAST REVISION	REVISION	DESCRIPTION:				INDEX	SHEET
11/01/19			FDOT	FY 2023-24 STANDARD PLANS	GUARDRAIL TRANSITIONS AND CONNECTIONS FOR EXISTING BRIDGES	536-002	21 of 28

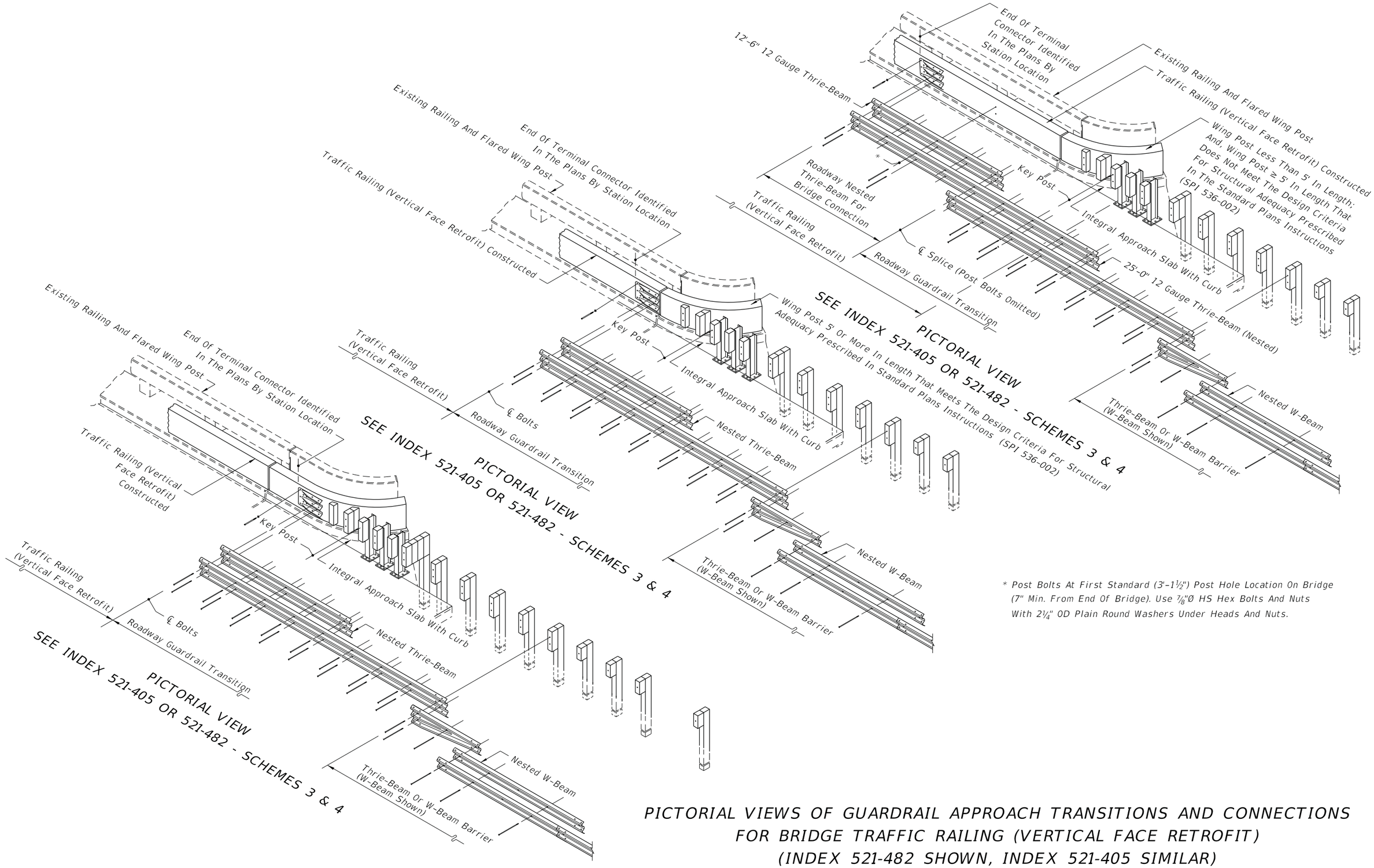

* Post Bolts At First Standard (3'-1½") Post Hole Location On Bridge (7" Min. From End Of Bridge). Use ⅞"Ø HS Hex Bolts And Nuts With 2¼" OD Plain Round Washers Under Heads And Nuts.

PICTORIAL VIEWS OF GUARDRAIL APPROACH TRANSITIONS AND CONNECTIONS FOR BRIDGE TRAFFIC RAILING (VERTICAL FACE RETROFIT) (INDEX 521-482 SHOWN, INDEX 521-405 SIMILAR)

10/6/2022 2:18:24 PM

LAST REVISION	REVISION	DESCRIPTION:			INDEX	SHEET
11/01/19			FY 2023-24 STANDARD PLANS	GUARDRAIL TRANSITIONS AND CONNECTIONS FOR EXISTING BRIDGES	536-002	22 of 28

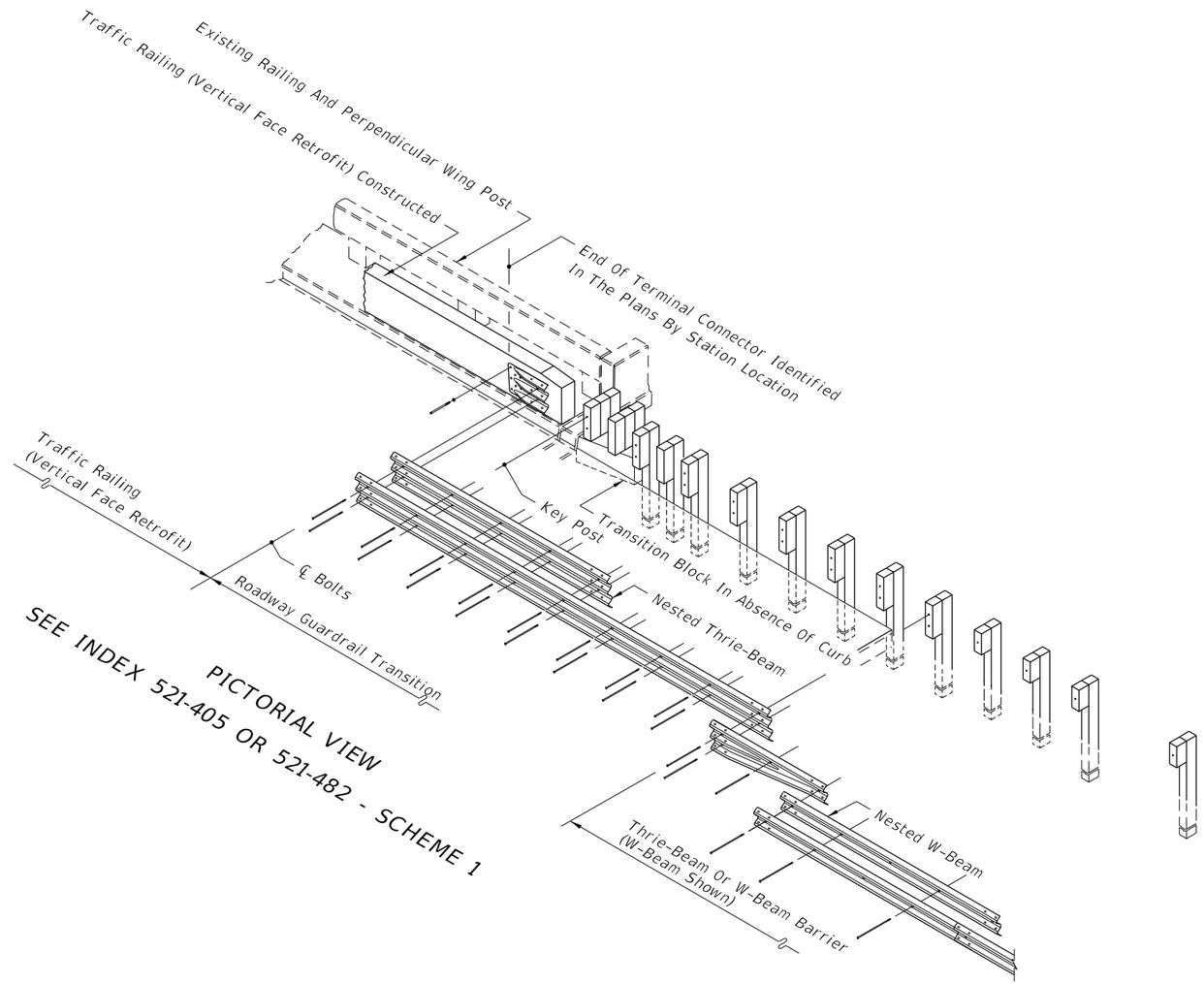

PICTORIAL VIEW

SEE INDEX 521-405 OR 521-482 - SCHEME 1

PICTORIAL VIEWS OF GUARDRAIL APPROACH TRANSITIONS AND CONNECTIONS FOR BRIDGE TRAFFIC RAILING (VERTICAL FACE RETROFIT) (INDEX 521-482 SHOWN, INDEX 521-405 SIMILAR)

10/6/2022 2:18:50 PM

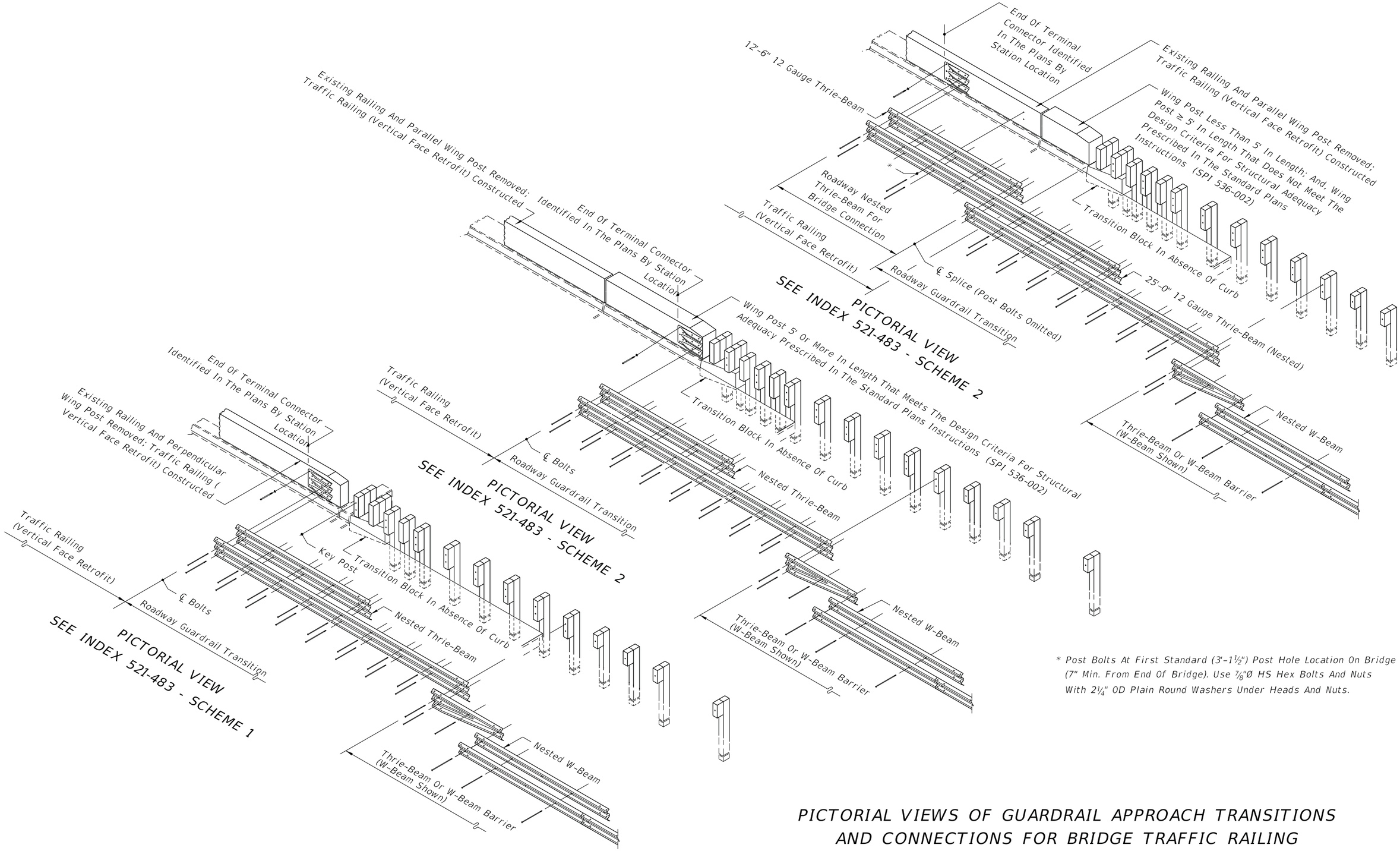

* Post Bolts At First Standard (3'-1½") Post Hole Location On Bridge (7" Min. From End Of Bridge). Use ⅞"Ø HS Hex Bolts And Nuts With 2¼" OD Plain Round Washers Under Heads And Nuts.

PICTORIAL VIEWS OF GUARDRAIL APPROACH TRANSITIONS AND CONNECTIONS FOR BRIDGE TRAFFIC RAILING (VERTICAL FACE RETROFIT)

10/6/2022 2:18:51 PM

LAST REVISION	REVISION	DESCRIPTION:				INDEX	SHEET
11/01/19			FDOT	FY 2023-24 STANDARD PLANS	GUARDRAIL TRANSITIONS AND CONNECTIONS FOR EXISTING BRIDGES	536-002	24 of 28

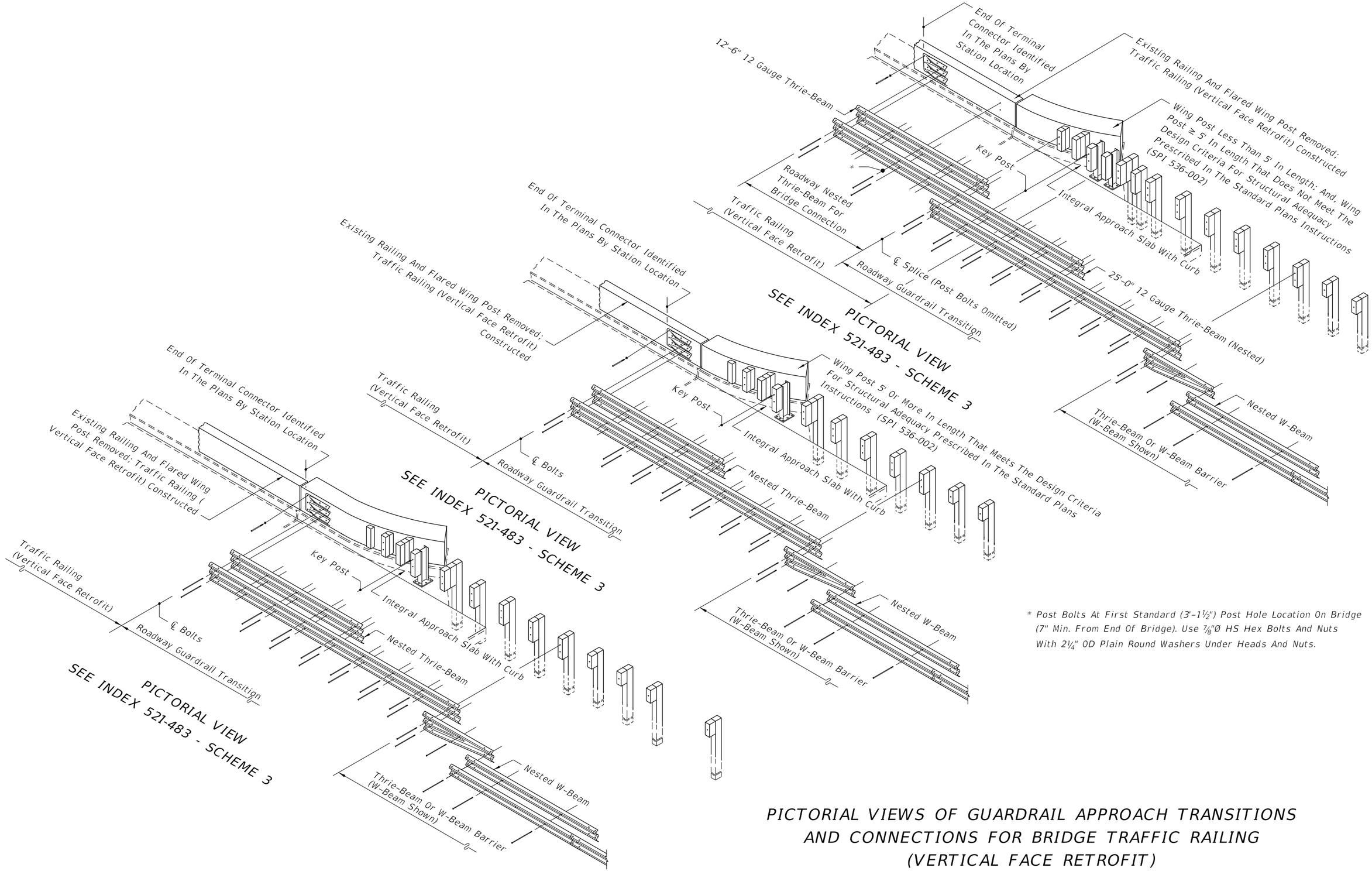

* Post Bolts At First Standard (3'-1½") Post Hole Location On Bridge (7" Min. From End Of Bridge). Use ⅞"Ø HS Hex Bolts And Nuts With 2¼" OD Plain Round Washers Under Heads And Nuts.

PICTORIAL VIEWS OF GUARDRAIL APPROACH TRANSITIONS AND CONNECTIONS FOR BRIDGE TRAFFIC RAILING (VERTICAL FACE RETROFIT)

10/6/2022 2:18:53 PM

LAST REVISION	REVISION	DESCRIPTION:			INDEX	SHEET
11/01/19			FY 2023-24 STANDARD PLANS	GUARDRAIL TRANSITIONS AND CONNECTIONS FOR EXISTING BRIDGES	536-002	25 of 28

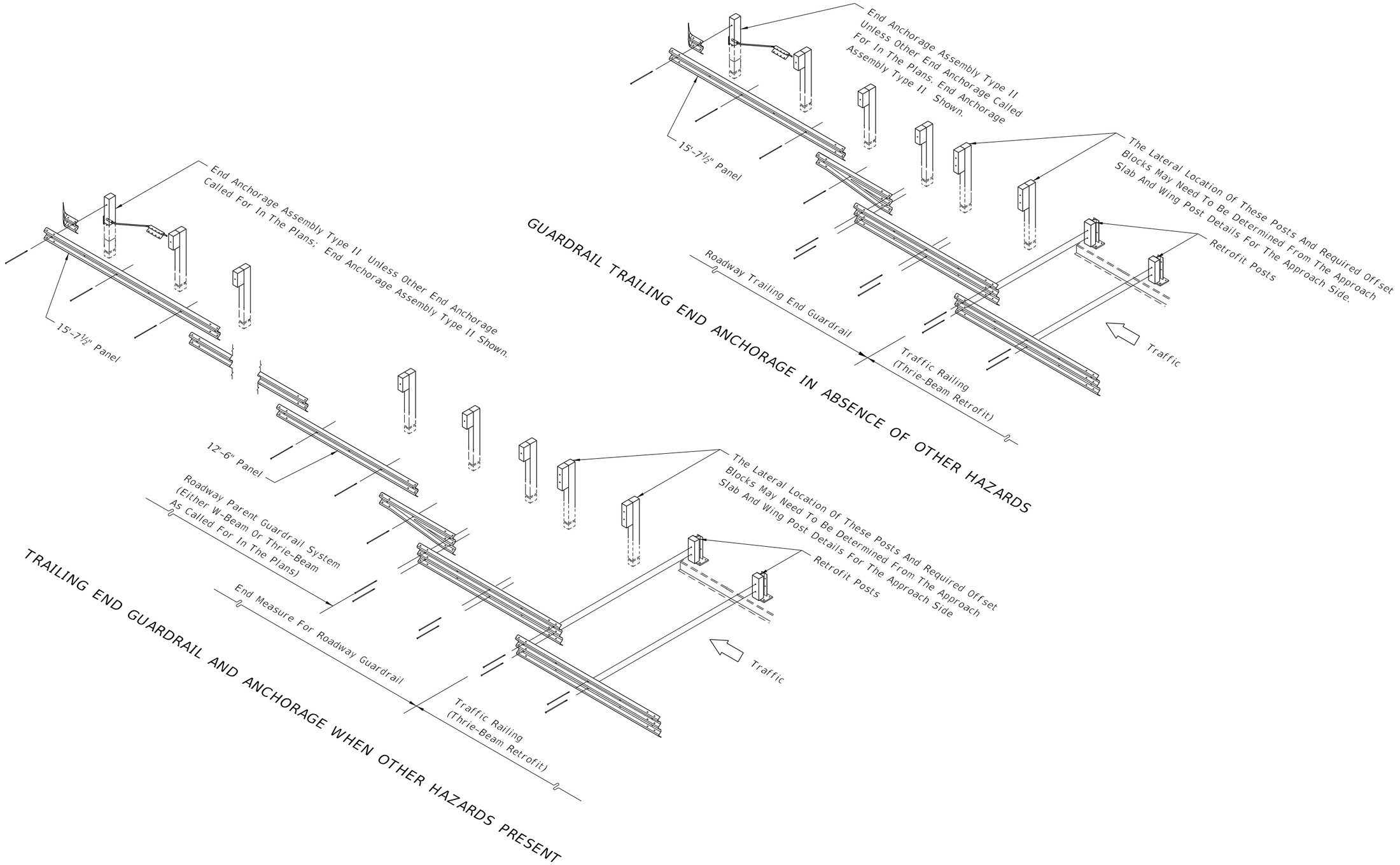

TRAILING END GUARDRAIL AND ANCHORAGE FOR BRIDGE TRAFFIC RAILING (THRIE BEAM RETROFITS)

10/6/2022 2:18:54 PM

LAST REVISION	REVISION	DESCRIPTION:			INDEX	SHEET
11/01/19			FY 2023-24 STANDARD PLANS	GUARDRAIL TRANSITIONS AND CONNECTIONS FOR EXISTING BRIDGES	536-002	26 of 28

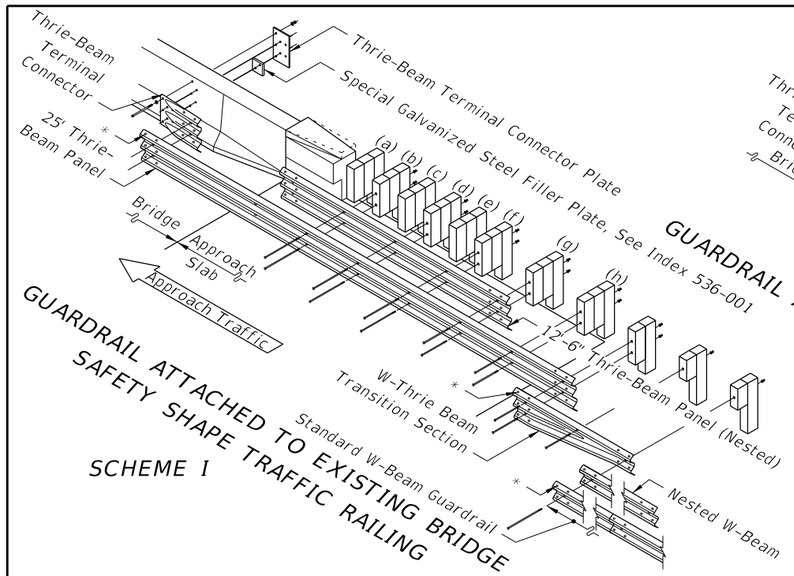

GUARDRAIL ATTACHED TO EXISTING BRIDGE SAFETY SHAPE TRAFFIC RAILING

SCHEME I

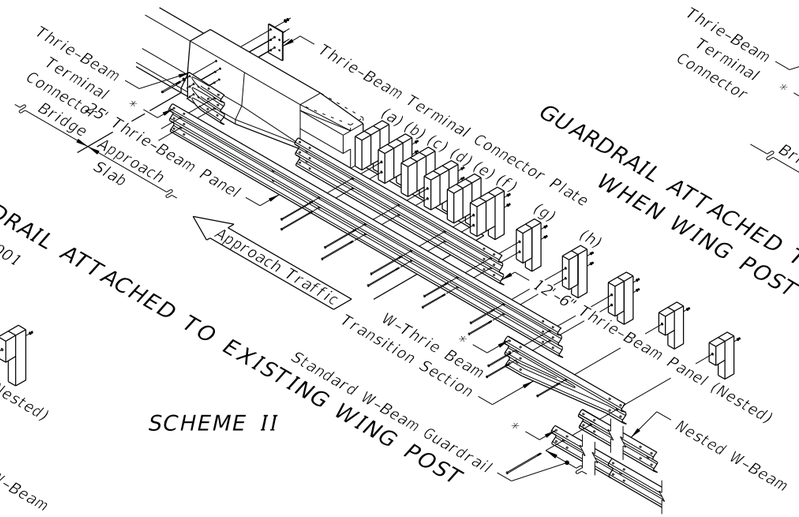

GUARDRAIL ATTACHED TO EXISTING WING POST

SCHEME II

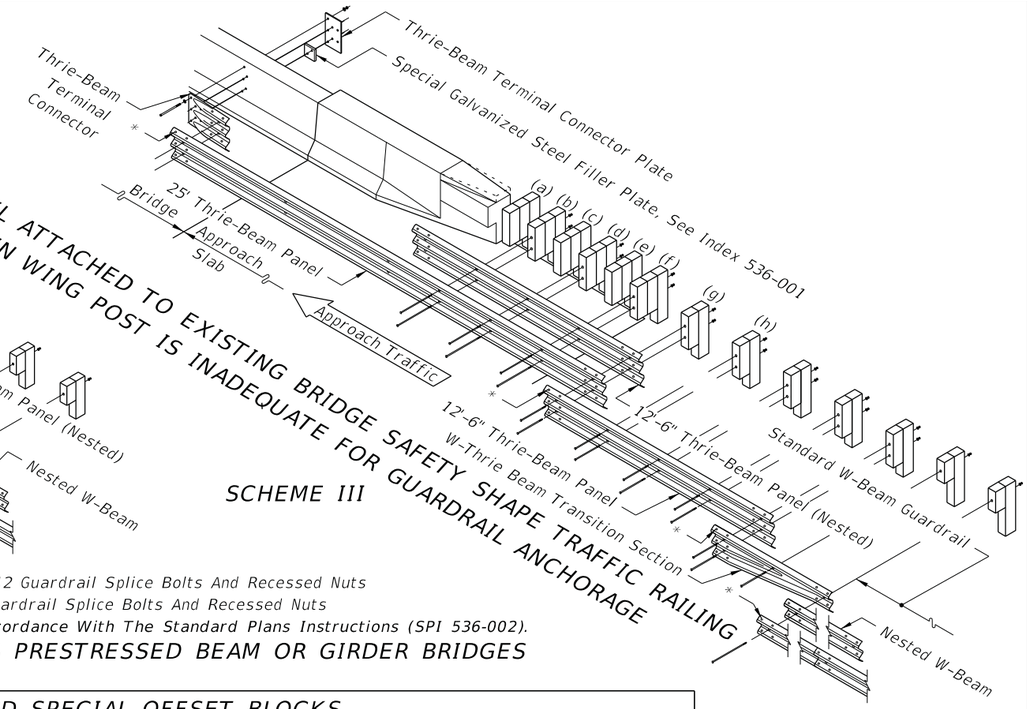

GUARDRAIL ATTACHED TO EXISTING BRIDGE SAFETY SHAPE TRAFFIC RAILING WHEN WING POST IS INADEQUATE FOR GUARDRAIL ANCHORAGE

SCHEME III

Use Of Scheme I Shall Be Determined
In Accordance With The Standard Plans Instructions (SPI 536-002).

GUARDRAIL TRANSITION TO EXISTING FLAT SLAB BRIDGES

* Splice Locations: Thrie-Beam - 12 Guardrail Splice Bolts And Recessed Nuts
W-Beam - 8 Guardrail Splice Bolts And Recessed Nuts
Use Of Schemes II And III Shall Be Determined In Accordance With The Standard Plans Instructions (SPI 536-002).

GUARDRAIL TRANSITIONS TO EXISTING PRESTRESSED BEAM OR GIRDER BRIDGES

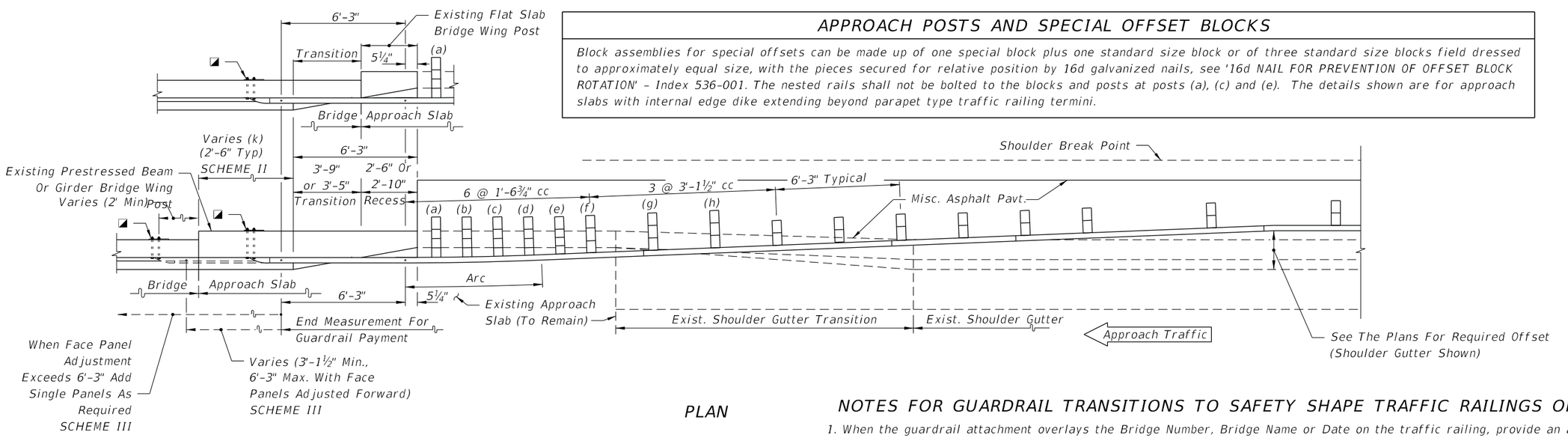

PLAN

APPROACH POSTS AND SPECIAL OFFSET BLOCKS

Block assemblies for special offsets can be made up of one special block plus one standard size block or of three standard size blocks field dressed to approximately equal size, with the pieces secured for relative position by 16d galvanized nails, see '16d NAIL FOR PREVENTION OF OFFSET BLOCK ROTATION' - Index 536-001. The nested rails shall not be bolted to the blocks and posts at posts (a), (c) and (e). The details shown are for approach slabs with internal edge dike extending beyond parapet type traffic railing termini.

◪ 21"x12"x⅝" Thrie-Beam Terminal Connector Plate (Back-Up Plate), And ⅞"Ø x 18" Long [15" Long With 3½" Min. Thread Length For Bridge Safety Shape Railing] HS Hex Bolts And Nuts (5 Reqd.) With 2¼" OD Plain Round Washers Under Heads And Nuts. [When Attaching Guardrail To Existing Wing Posts Or Bridge Rails, Care Should Be Exercised To Avoid Damaging Conduits And Their Utilities That May Be Routed Through Wing Posts Or Bridge Rails. When Conduits And Their Utilities Are Encountered, At Least Five ⅞" HS Hex Bolts Shall Be Installed In Any Of The Seven Holes Provided In The Thrie-Beam Terminal Connector.]

NOTES FOR GUARDRAIL TRANSITIONS TO SAFETY SHAPE TRAFFIC RAILINGS ON EXISTING BRIDGES

1. When the guardrail attachment overlays the Bridge Number, Bridge Name or Date on the traffic railing, provide an aluminum sign panel with the obscured information. Attach the sign panel to the face of the traffic railing adjacent to the Thrie-Beam Terminal Connector with ¼"Ø x 1" long concrete screws or expansion anchors at each corner, as approved by the Engineer. The sign panel shall be a minimum 1/16" thick and meet the requirements of Specification 700 with a white background and 3" tall black letters and sized appropriately to contain the information required. The cost of the sign panel shall be included in the cost of the Guardrail Bridge Anchorage Assembly.

2. When retrofitting thrie-beam guardrail to existing wing posts or existing bridge safety shape traffic railing, attachment construction to be paid for under the contract unit price for Guardrail Bridge Anchorage Assembly, EA., and shall be full compensation for bolt hole construction, terminal connector, terminal connector plate(s) and bolts, nuts and washers.

GUARDRAIL APPROACH TRANSITION CONNECTIONS FOR EXISTING FLAT SLAB, PRESTRESSED BEAM AND GIRDER BRIDGES WITH SAFETY SHAPE TRAFFIC RAILING EXTENDING LESS THAN FULL APPROACH SLAB LENGTH

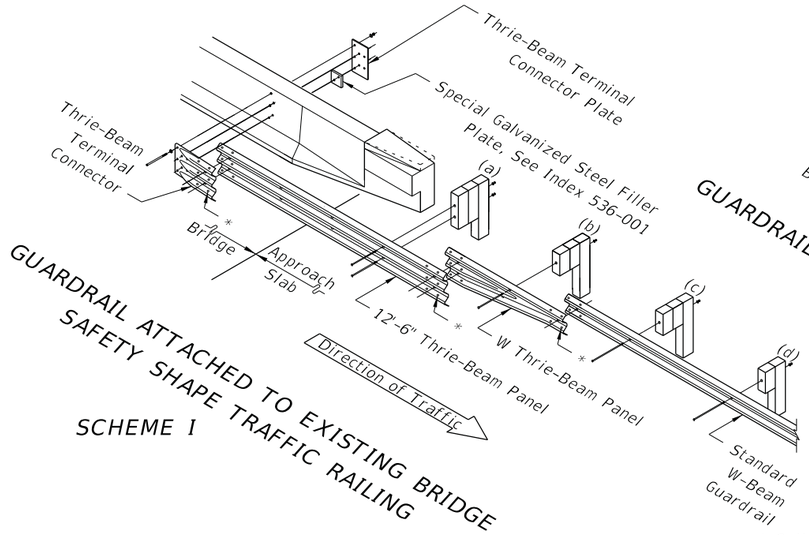

GUARDRAIL ATTACHED TO EXISTING BRIDGE SAFETY SHAPE TRAFFIC RAILING

SCHEME I

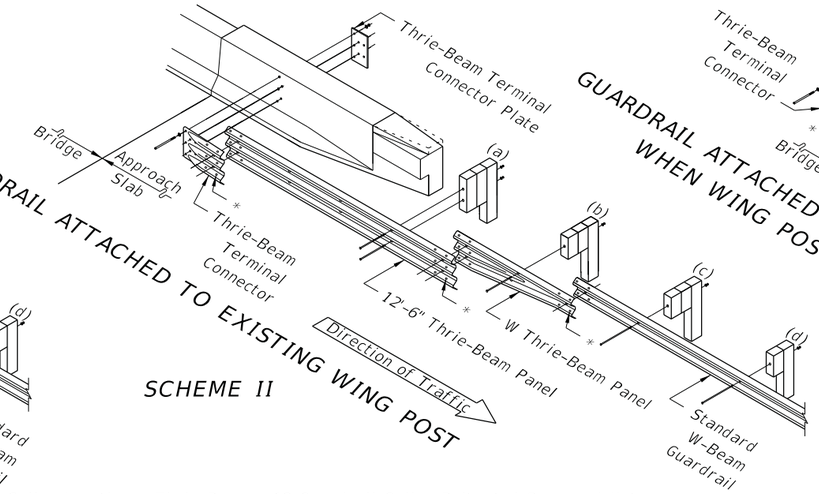

GUARDRAIL ATTACHED TO EXISTING WING POST

SCHEME II

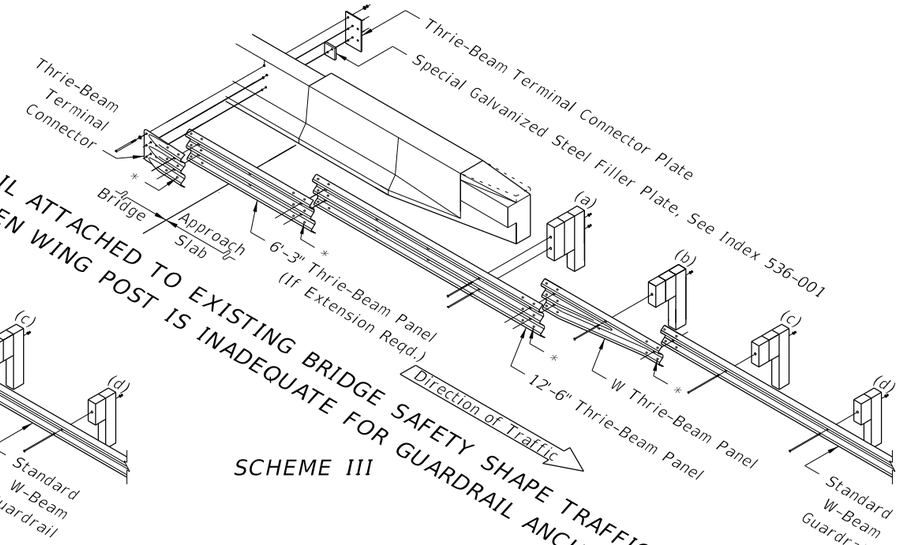

GUARDRAIL ATTACHED TO EXISTING BRIDGE SAFETY SHAPE TRAFFIC RAILING WHEN WING POST IS INADEQUATE FOR GUARDRAIL ANCHORAGE

SCHEME III

Use Of Scheme I Shall Be Determined In Accordance With The Standard Plans Instructions (SPI 536-002).

GUARDRAIL TRANSITION TO EXISTING FLAT SLAB BRIDGES

* Splice Locations: Thrie-Beam - 12 Guardrail Splice Bolts And Recessed Nuts
W-Beam - 8 Guardrail Splice Bolts And Recessed Nuts

Use Of Schemes II And III Shall Be Determined In Accordance With The Standard Plans Instructions (SPI 536-002).

GUARDRAIL TRANSITIONS TO EXISTING PRESTRESSED BEAM OR GIRDER BRIDGES

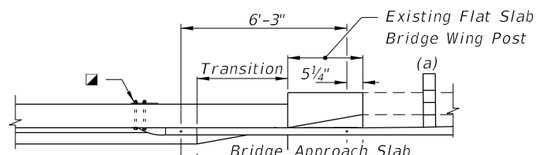

TRAILING END POSTS AND SPECIAL OFFSET BLOCKS

Block assemblies for special offsets can be made up of one special block plus one standard size block or of three standard size blocks field dressed to approximately equal size, with the pieces secured for relative position by 16d galvanized nails, see '16d NAIL FOR PREVENTION OF OFFSET BLOCK ROTATION' - Index 536-001. The nested rails shall not be bolted to the blocks and posts at posts (a), (c) and (e). The details shown are for approach slabs with internal edge dike extending beyond parapet type traffic railing termini.

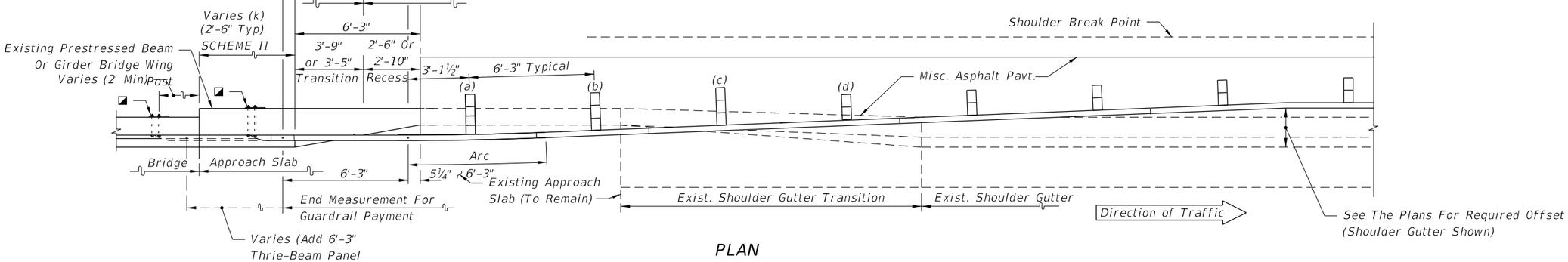

PLAN

◪ 21"x12"x⅝" Thrie-Beam Terminal Connector Plate (Back-Up Plate), And ⅞"Ø x 18" Long [15" Long With 3½" Min. Thread Length For Bridge Safety Shape Railing] HS Hex Bolts And Nuts (5 Reqd.) With 2¼" OD Plain Round Washers Under Heads And Nuts. [When Attaching Guardrail To Existing Wing Posts Or Bridge Rails, Care Should Be Exercised To Avoid Damaging Conduits And Their Utilities That May Be Routed Through Wing Posts Or Bridge Rails. When Conduits And Their Utilities Are Encountered, At Least Five ⅞" HS Hex Bolts Shall Be Installed In Any Of The Seven Holes Provided In The Thrie-Beam Terminal Connector.]

NOTES FOR GUARDRAIL TRANSITIONS TO SAFETY SHAPE TRAFFIC RAILINGS ON EXISTING BRIDGES

1. When the guardrail attachment overlays the Bridge Number, Bridge Name or Date on the traffic railing, provide an aluminum sign panel with the obscured information. Attach the sign panel to the face of the traffic railing adjacent to the Thrie-Beam Terminal Connector with ¼"Ø x 1" long concrete screws or expansion anchors at each corner, as approved by the Engineer. The sign panel shall be a minimum 1/16" thick and meet the requirements of Specification 700 with a white background and 3" tall black letters and sized appropriately to contain the information required. The cost of the sign panel shall be included in the cost of the Guardrail Bridge Anchorage Assembly.

2. When retrofitting thrie-beam guardrail to existing wing posts or existing bridge safety shape traffic railing, attachment construction to be paid for under the contract unit price for Guardrail Bridge Anchorage Assembly, EA., and shall be full compensation for bolt hole construction, terminal connector, terminal connector plate(s) and bolts, nuts and washers.

GUARDRAIL TRAILING END TRANSITION CONNECTIONS FOR EXISTING FLAT SLAB, PRESTRESSED BEAM AND GIRDER BRIDGES WITH SAFETY SHAPE TRAFFIC RAILING EXTENDING LESS THAN FULL APPROACH SLAB LENGTH

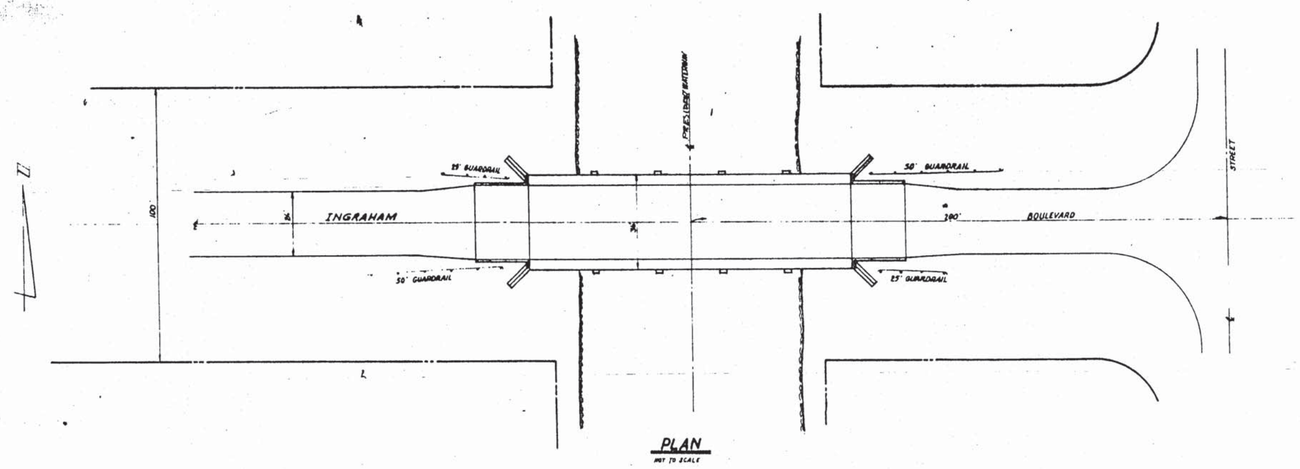

PLAN
NOT TO SCALE

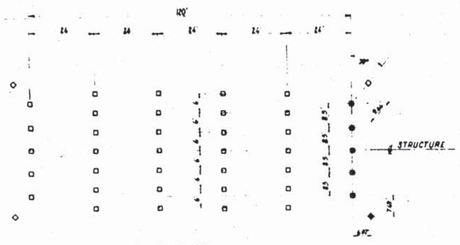

PILE PLAN
NOT TO SCALE

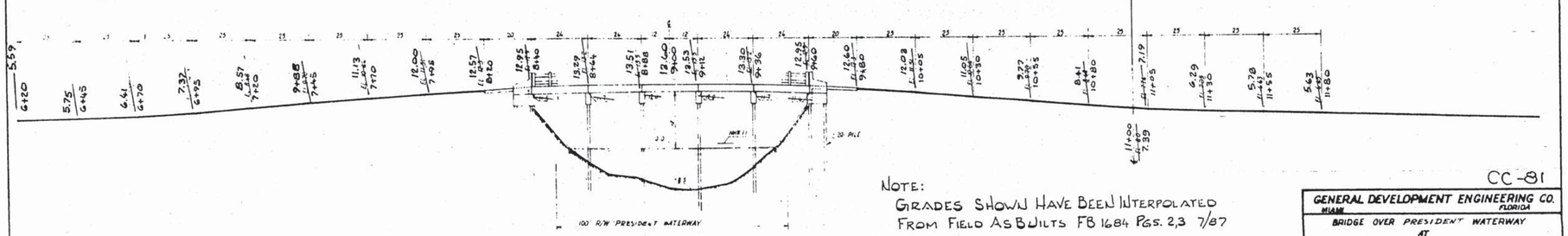

ELEVATION
NOT TO SCALE

NOTE:
GRADES SHOWN HAVE BEEN INTERPOLATED
FROM FIELD AS BUILTS FB 1684 PGS. 2,3 7/87

FB 1684 PGS 2,3
12-4-87-CAH-AS BUILT APPROACH & BRIDGE GRADES

ESTIMATED QUANTITIES

ITEM	UNIT	QUANT
Concrete 3000#	Cu. Yd.	98.8
Reinforcing Steel	Lbs.	8978.4
Concrete Piling 14" Sq. Permanent	Lin. Ft.	1253
Concrete Piling 14" Sq. Driven	Lin. Ft.	1180
Concrete Piling 14" Sq. Test Driven	Lin. Ft.	45
300 (5") N.B. Prestressed Deck Slab	Sq. Ft.	4320
4" Slope Pavement (Reinforced)	Sq. Yd.	413
6" Approach Slab (Reinforced) w/ curb	Sq. Yd.	142.4
Guardrail	Lin. Ft.	150

GENERAL NOTES

Design Specification A.A.S.H.O. 1985
Loading H- 20-44

1. All dimensions are to be verified in the field. Any discrepancies, errors or omissions are to be reported to the Engineer for clarification or correction before work is continued.
2. Piles are to be driven to a minimum bearing value of 30 tons by the Florida S.R.R. formula. Pile shall be driven to a minimum penetration as shown.
3. Backfill must be free of silt or organic matter and relatively free of clay. Backfill is to be compacted in layers of not more than 12" deep.
4. Exposed components such as curbs, end posts and cap ends shall be stripped and rubbed within 24 hours after pouring.
5. Poured-in-place concrete shall have a strength of not less than 3000 P.S.I. in 28 days.
6. Quantities for piling are based on an estimated length of 20' and 30' piles.
7. Specifications applicable are FLORIDA STATE ROAD DEPARTMENT Standard specifications for road and bridge construction dated 1986.
8. Approaches by GENERAL DEVELOPMENT CORPORATION.
9. Pavement by GENERAL DEVELOPMENT CORPORATION.
10. Line and grade by GENERAL DEVELOPMENT CORPORATION.
11. Contractor will give one working day notice for need of line and grade.

INDEX

1 LOCATION
2 HANDRAIL 2005
3 PILING 3002
4 SLOPE PAVEMENT 4002
5 APPROACH SLAB 5004
6 SUPERSTRUCTURE 6005
7 SUBSTRUCTURE 7004
8 GUARDRAIL 9001

CC-81

GENERAL DEVELOPMENT ENGINEERING CO.
MIAMI FLORIDA

BRIDGE OVER PRESIDENT WATERWAY
AT
INGRAHAM BOULEVARD

SEC 21 TWP 41 S RGE 21 E

R.A. BILDEN
REG. ENGR. No. 6541
CIVIL ENGINEER
MIAMI, FLORIDA

DATE APRIL 76 | DRAWN BY A.G. | CHD BY | RELEASED BY | SHEET NO. 1 OF 7
SCALE NONE | CHKD BY R.B. | APPR BY

CC-81 Filmed 7/82

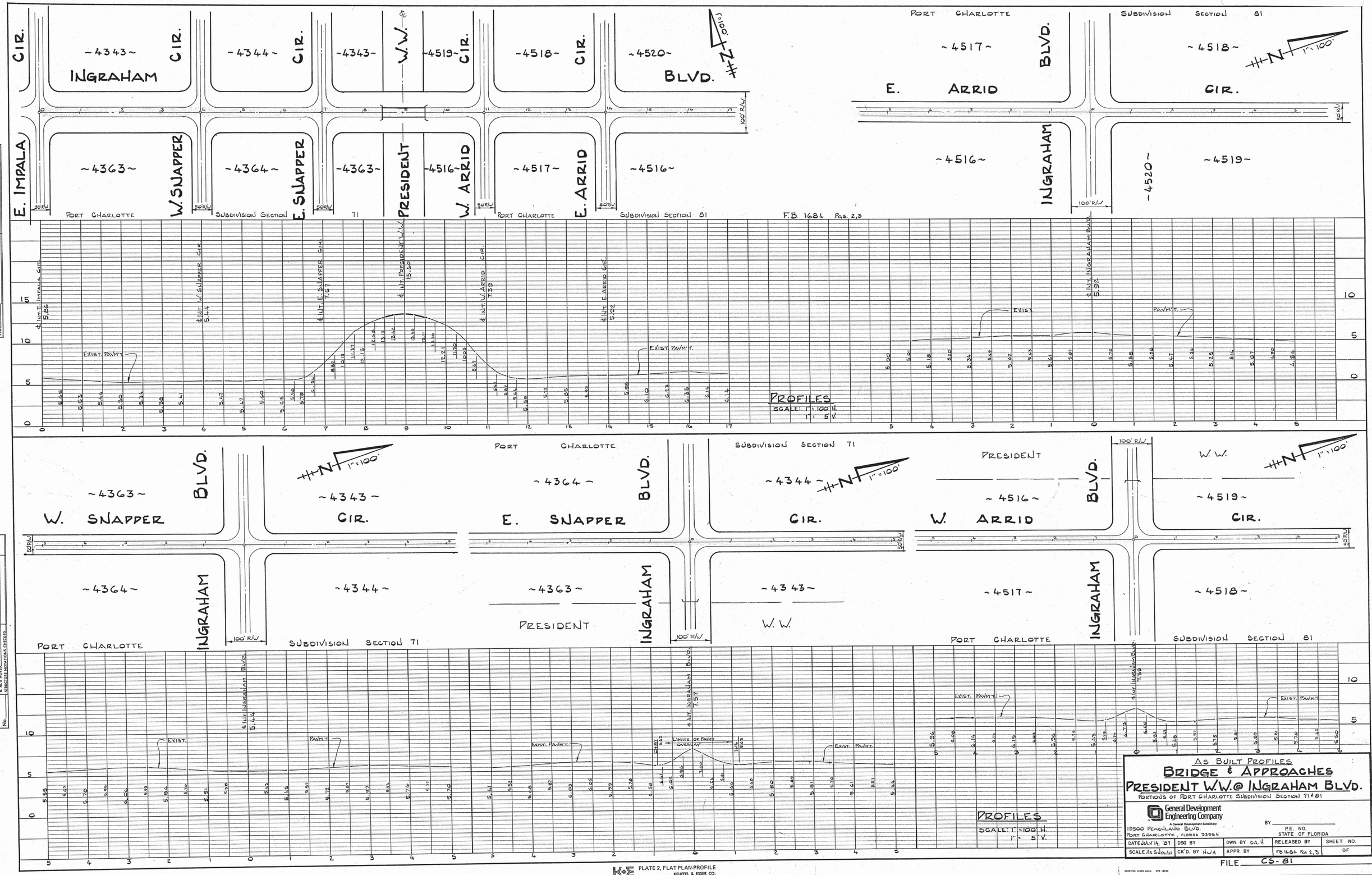

PLAN
NOTE BOOK
No.
SURVEYED
PLOTTED
ALIGNMENT CHECKED
RT. OF WAY CHECKED
BY
DATE

PROFILE
NOTE BOOK
No.
SURVEYED
PLOTTED
GRADES CHECKED
B. M.'S NOTED
STRUCTURE DIMENSIONS CHECKED
BY
DATE

AS BUILT PROFILES
BRIDGE & APPROACHES
PRESIDENT W.W. @ INGRAHAM BLVD.
PORTIONS OF PORT CHARLOTTE SUBDIVISION SECTION 71 & 81

General Development Engineering Company
A General Development Subsidiary
19500 PEACHLAND BLVD.
PORT CHARLOTTE, FLORIDA 33954

BY _____
P.E. NO.
STATE OF FLORIDA

DATE JULY 14, '87	DSG BY	DWN. BY G.A.H.	RELEASED BY	SHEET NO.
SCALE AS SHOWN	CK'D. BY HWA	APPR. BY	FB 1684 PGS 2,3	OF

FILE CS-81

K+E PLATE 2, FLAT PLAN-PROFILE
KEUFFEL & ESSER CO.
48 7028 MADE IN U.S.A.